T. O. 16-1-195

RADAR ELECTRONIC FUNDAMENTALS

NAVSHIPS 900,016

BUREAU OF SHIPS ★ NAVY DEPARTMENT

RADAR ELECTRONIC FUNDAMENTALS

NAVSHIPS 900,016

U.S. BUREAU OF SHIPS ★ NAVY DEPARTMENT

WASHINGTON, D. C., JUNE 1944

For sale by the Superintendent of Documents, U. S. Government Printing Office
Washington 25, D. C. - Price $1.50

Bureau of Ships, Navy Department,
Washington, D. C., 1 June 1944.

1. "Radar Electronic Fundamentals", Navships 900,016, has been prepared jointly by representatives of the Army and Navy. This volume contains introductory material to the confidential publication "Radar System Fundamentals" (Navships 900,017).

2. The publication of this book was made possible through the cooperation of The Adjutant General, War Department; the Chief Signal Officer; the Commander in Chief, United States Fleet; and the Chief of Naval Personnel. It is issued by the Chief of the Bureau of Ships.

3. Additional copies of this publication (NavShips 900,016), when required, should be requested from the Bureau of Ships, Navy Department, Washington 25, D. C.

J. B. Dow, *Captain, U. S. N.*

CONTENTS

FOREWORD

Radar Electronic Fundamentals has been written for the purpose of providing the student technician with an understanding of basic circuits which are the components of more complex radar circuits. It is assumed that he possesses a rudimentary knowledge of magnetism and electricity and the basic principles of radio, and is familiar with the subject coverage of either the Radio Technician Courses as furnished by the Bureau of Naval Personnel, or TM 1–455 and 11–455 as provided by the War Department.

The review of electrical fundamentals is provided in section II for the student who requires a survey of pertinent electrical concepts prior to the study of circuit performance. This section is not in sufficient detail to serve as an introduction to the subject of electricity. The review of electrical fundamentals is followed in section III by an introduction to the characteristics of nonsinusoidal waves and transient action in circuits containing resistance and capacitance or inductance. Sections IV, V, and VI provide a brief discussion of vacuum tube types and performance, amplifier, oscillator, and power-supply circuits. Emphasis is placed on the circuits which find extensive application in radar.

Sections VII through XIII are devoted to the analysis of circuits and circuit elements which form the basic components of radar equipment. Explanations throughout the text are as nearly nonmathematical as possible, as it is anticipated that the student technician has neither an extensive mathematical background nor the need for concern with design considerations.

It is recognized that a simple descriptive nomenclature is important in training radar technicians, and an effort has been made throughout this text to select and use consistently terms of a descriptive nature. In support of this effort a glossary of terms is provided in the appendix. Simple conventions have been used in preparing the circuit diagrams. The following practices have been adopted with regard to values of circuit elements on diagrams:

Resistors.

150 = 150 ohms.
150K = 150,000 ohms (150 kilohms).
1.5M = 1,500,000 ohms (1.5 megohms).

Capacitors.

.01 = 0.01 microfarad.
10 = 10 microfarads.
10μ = 10 micromicrofarads.

Lines which cross and are not tied together by a *dot* form *no* contact. Lines which cross and are tied together by a dot *do* form a contact. The direction of current flow has been considered to be the direction of the movement of electrons, that is, from negative to positive within the circuit and from cathode to plate within the vacuum tube.

This manual supersedes TM 11-466, 30, December 1943.

SECTION I

INTRODUCTION TO RADAR

---

1. DEFINITION. Radar is a radio device which may be used to locate airplanes or ships in darkness, fog, or storm. Radar means *radio direction and ranging.* It is one of the greatest scientific developments which has emerged from World War II. Its development, like the development of every other great invention, was mothered by necessity, that is, offsetting an offensive weapon which first appeared in the last war—the airplane. The basic principles upon which its functioning depends are simple. Therefore, the seemingly complicated series of electrical events encountered in radar can be resolved into a logical series of functions.

2. PRINCIPLES OF OPERATION. a. Sound wave reflection. (1) The principle upon which radar operates is very similar to the principle of sound echoes, or wave reflection. If a person shouts toward a cliff, or some other sound-reflecting surface, he hears his shout "return" from the direction of the cliff. What actually takes place is that the sound waves, generated by the shout, travel through the air until they strike the cliff. They are then "bounced off" or reflected, some returning to the original spot where the person hears the echo. Some time elapses between the instant the sound originates and the time when echo is heard, since sound waves travel through air at approximately 1,100 feet per second. The farther the person is from the cliff, the longer this time interval will be. If a person is 2,200 feet from the cliff when he shouts, 4 seconds elapse before he hears the echo: 2 seconds for the sound waves to reach the cliff and 2 seconds for them to return.

(2) If a directional device is built to transmit and receive sound, the principles of echo and velocity of sound can be used to determine the direction, distance, and height of the cliff shown in figure 1. A source of pulsating sound, at the focus of a parabolic reflector, is so arranged that it throws a parallel beam of sound. The receiver is a highly directional microphone located inside a reflector to increase the directional effect. The microphone is connected through an amplifier to a loud speaker. It is assumed that the distance between the transmitter and receiver is negligible compared with their distance from the cliff.

(3) To determine distance and direction, the transmitting and receiving apparatus is placed so that the line of travel of the transmitted sound beam and the received echo coincide. The apparatus is rotated until the maximum volume of echo is obtained. The distance to the cliff can then be determined by multiplying one-half of the elapsed time in

seconds by the velocity of sound, 1,100 feet per second. This will be the distance along the line R-A. If the receiver has a circular scale which measures degrees of rotation and which has been properly oriented with

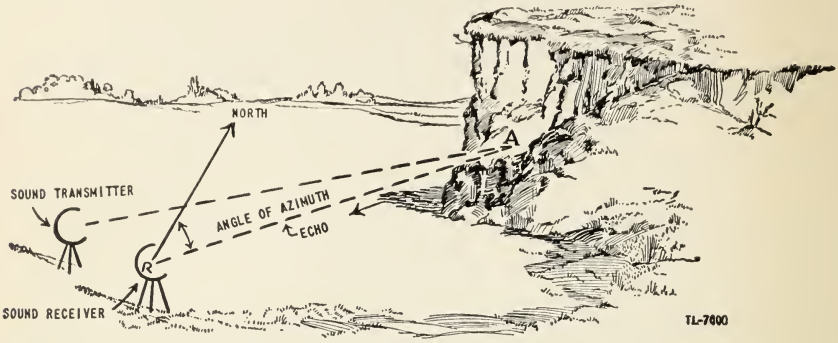

Figure 1. Determination of direction.

a compass, the direction or azimuth of the cliff can be found. Thus, if the angle read on the scale is 45°, the cliff is northeast from the receiver position.

(4) To determine height (fig. 2), the transmitter and receiver are elevated from the horizontal position while still pointing in the same direction. At first the echo is still heard but the elapsed time is increased slightly. As the angle of elevation is increased further, a point is found where the echo disappears. This is the angle at which the sound is passing over the top of the cliff and therefore is not reflected back to the receiver. The point at which the echo just disappears is that where the angle of elevation is such that the apparatus is pointed at *B*. If the receiver is equipped with a scale to read the angle of elevation, the height of the cliff *A–B* can be calculated from this angle and the distance *R–A*.

b. Radio wave reflection. (1) All radar sets work on a principle very much like that described for sound waves. In radar sets, however, a radio wave of an extremely high frequency is used instead of a sound wave (fig. 3). The energy sent out by a radar set is similar to that sent out by an ordinary radio transmitter. The radar set, however, has one outstand-

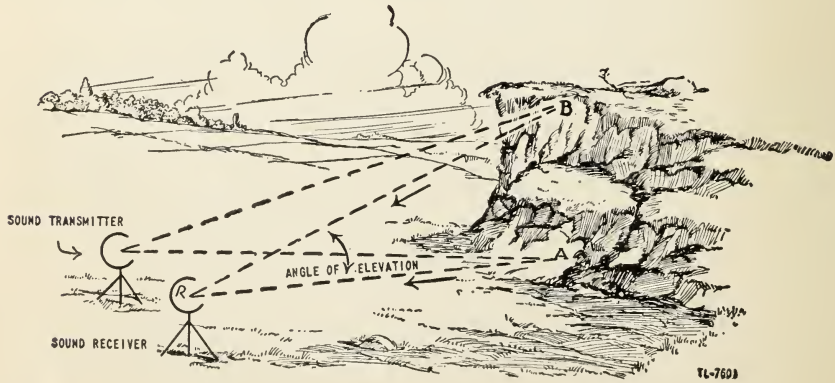

Figure 2. Determination of height.

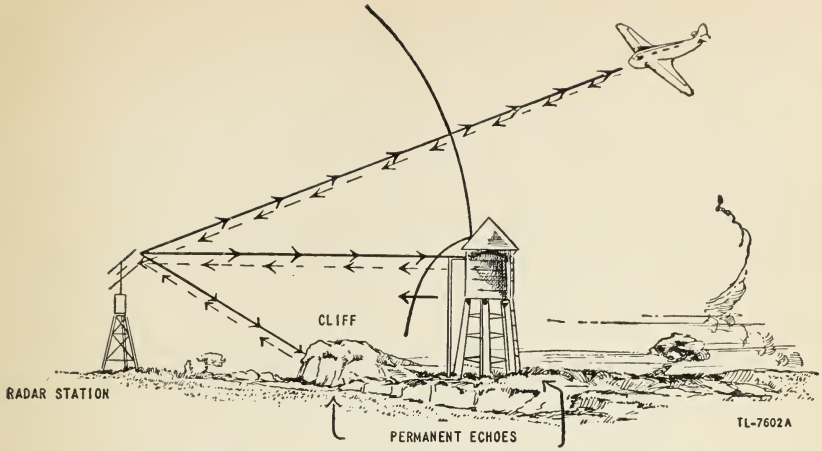

Figure 3. Transmission and reflection of radar pulses.

ing difference in that it picks up its own signals. It transmits a short pulse, and receives its echoes, then transmits another pulse and receives its echoes. This out-and-back cycle is repeated from 60 to 4,000 times per second, depending upon the design of the set. If the outgoing wave is sent into clear space, no energy is reflected back to the receiver. The wave and the energy which it carries simply travel out into space and are lost for all practical purposes.

(2) If, however, the wave strikes an object such as an airplane, a ship, a building, or a hill, some of the energy is sent back as a reflected wave. If the object is a good conductor of electricity and is large, compared to a quarter-wavelength of the transmitted energy, a strong echo is returned to the antenna. If the object is a poor conductor or is small, the reflected energy is small and the echo is weak.

(3) Radio waves of extremely high frequencies travel in straight lines at a speed of approximately 186,000 miles per second as compared to 1,100 feet per second for sound waves. Accordingly, there will be an extremely short time interval between the sending of the pulse and the reception of its echo. It is possible, however, to measure the interval of elapsed time between the transmitted and received pulse with great accuracy—even to one ten-millionth of a second.

(4) The directional antennas employed by radar equipment transmit and receive the energy in a more or less sharply defined beam. Therefore, when a signal is picked up, the antenna can be rotated until the received signal is maximum. The direction of the target is then determined by the position of the antenna.

(5) The echoes received by the radar receiver appear as marks of light on a specially constructed instrument called the "oscilloscope," often called "scope" for short. This scope may be marked with a scale of miles, or degrees, or both. Hence, from the position of a signal echo on the scope, an observer can tell the range and direction of the corresponding target.

3. USES OF RADAR. a. General. Modern defense against aircraft attack requires that the presence, height, bearing, and range of hostile airplanes be made known long before the airplanes can be seen or heard. This

knowledge must be available irrespective of atmospheric conditions; fog, clouds, or smoke during the day or night must not interfere with the detection of hostile aircraft. Radar has provided a source for such information, and at the same time has opened new fields for greatly improving traffic control and safety for both airplanes and ships.

b. Long-range reporting or search. Reporting is accomplished by fixed or shipborne stations constantly searching a specific area to warn of enemy attack. Information from such stations is recorded continuously. The data are used to guide interceptor craft toward an enemy target.

c. Gun laying or fire control. Radar sets capable of determining with a high degree of accuracy the range, bearing, and elevation of the enemy target when within firing range are used for the control of land-based defense equipment, such as searchlights, antiaircraft batteries, and coastal batteries. Similar radar sets aboard ships are used for fire control, for antiaircraft, secondary, and main batteries. In such applications the data must be formulated rapidly and accurately.

d. Airborne use. Portable equipment is used in patrol aircraft to search for the presence of enemy targets; and in combat aircraft to locate the target, and for fire control. The equipment may be designed for the detection of aircraft, surface vessels, or submarines. It may also be used as an aid to navigation to determine the course or position in relation to a home beacon station.

e. Identification. It is possible to use auxiliary equipment with radar to determine whether an echo has come from a friendly or enemy craft.

4. HISTORICAL DEVELOPMENT. One of the first observations of "radio echoes" was made in the United States in 1922 by Dr. Albert H. Taylor of the Naval Research Laboratory. Dr. Taylor observed that a ship passing between a radio transmitter and receiver reflected some of the waves back toward the transmitter. Between 1922 and 1930 further tests proved the military value of this principle for the detection of surface vessels which were hidden by smoke, fog, or darkness. Further developments were conducted with carefully guarded secrecy. During this same period Dr. Breit and Dr. Tuve, of the Carnegie Institute, published reports on the reflection of pulse transmission from electrified layers in the upper atmosphere which forms the earth's ceiling. This led to the application of the principle to the detection of aircraft. Other countries carried on further experiments independently and with the utmost secrecy. By 1936, the United States Army was engaged in the development of a radar warning system for coastal frontiers. Between 1936 and 1940, the pulse system of transmission was further developed. By the end of 1940, mass production of radar equipment was under way. By September 1940, the British had developed radar to such a point that they were able to bring down great numbers of enemy airplanes with very little loss to themselves. Beginning in 1941, British-American cooperation in the development of radar has given the United Nations the best radar equipment in the world. However, our enemies have also made great strides in radar development. This was evidenced by the sinking of the British battle cruiser Hood by the German battleship Bismarck, by means of radar range finding, before the Hood could fire her second salvo.

SECTION II

REVIEW OF ELECTRICAL FUNDAMENTALS

---

5. GENERAL. In order to study fundamentals of radar, a clear understanding of basic radio theory is essential. This section therefore provides a general review of d-c and a-c principles. Since it is assumed that the reader has previously studied the elementary principles of electricity and radio, as covered in TM 1–455 and 11–455 or the Bureau of Navigation Training Courses for Radioman 3d class and 2d class, no attempt is made to cover the material thoroughly. It is essential, however, that some important concepts be reviewed.

6. CONSTITUTION OF MATTER. a. General. Matter is any substance having weight and occupying space. The air a person breathes, the water he drinks, the bus in which he rides, his own body, all constitute matter. All matter is made up of one or more of 92 fundamental constituents, such as oxygen, hydrogen, iron, carbon, and copper, known as *elements* because they cannot be broken into simpler substances by chemical processes. Matter appears in three forms: it may be a pure elemental substance; it may be a *compound* formed by the chemical union of two or more elements; or it may be a *mixture* of several elements or compounds which are not bound together by chemical action. Irrespective of the form in which it is found, all matter can be broken down into molecules. The molecule of a compound always contains two or more atoms, while the molecules of some elements consist of a single atom.

b. Composition of atom. An atom is the smallest particle of an element which retains all the characteristics of the element. Although it is an extremely small particle of matter, the atom can be subdivided into a positively charged *nucleus* or core and a cloud of negatively charged particles called *electrons* that revolve at a very high speed around the nucleus. Figure 4① shows the atomic structure of the simplest atom, the hydrogen atom, which contains one electron revolving around the proton which acts as the nucleus. The positive charge on the proton exactly equals the negative charge on the electron so that the atom is electrically neutral. In figure 4② the nucleus contains four protons, the charge on two of which is neutralized by the two electrons which are bound to the protons to form neutrons. The resulting positive charge is just sufficient to hold two revolving electrons in an orbit around the nucleus, and the net charge of the atom is zero. Atoms of other elements are more complex than the two simple examples shown here. However, the only

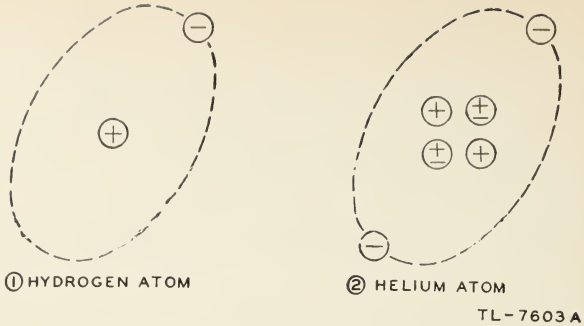

Figure 4. Structure of hydrogen and helium atoms.

difference among the atoms of the several elements lies in the number and arrangement of the protons and electrons of which each atom is composed. All atoms are electrically neutral since the number of positive charges always equals the number of negative charges. Since all matter is composed of atoms, and all atoms are composed of positive and negative electrical charges, all matter is electrical in nature.

c. Conductors and insulators. In any material some of the electrons are not tightly held in their orbits. Such electrons, called *free electrons,* are able to move from one atom to another with relative ease. If a voltage is impressed across a substance, the free electrons are very quickly set in motion, causing the flow of an electric current. In many materials such as glass, hard rubber, and porcelain, there are very few free electrons. These materials are known as insulators because it is difficult to force an appreciable electric current through them. In other materials, such as silver, copper, and aluminum, there are many free electrons. These materials are known as conductors because an electric current can easily be forced through them.

d. Electric current. The free electrons in a conductor are moving constantly and changing their positions in a haphazard manner. When a battery is connected to the two ends of a copper wire, the random motion of the free electrons is directed toward the positive terminal by the attraction of the positive voltage. Although the electrons themselves do not move through the wire at a high speed, the disturbance that causes them to drift along the wire progresses with the speed of light. This action may be compared to knocking down a column of tin soldiers; the soldiers do not move very far, but the initial disturbance travels down the column almost instantaneously. The battery forces the free electrons to drift from atom to atom along the wire only as long as it is connected. When it is removed, each atom is left with its proper number of electrons since those that were taken from the wire at the positive terminal of the battery exactly equal those that were added at the negative end. This drift or flow of electrons along a wire is called an *electric current.* Since the electrons flow from negative to positive, the *current is said to flow from negative to positive.* This statement is in contrast with the older conventional theory which assumed current flow to be from positive to negative. In order to avoid confusion in this manual, any reference to direction of current refers to electron flow or electron-current flow.

e. Resistance. Since an electric current is a flow of free electrons in

a material, those substances which have a large number of free electrons are able to pass a larger current with a given voltage impressed than can a substance with few free electrons. The measure of the number of free electrons in a material is a property called *resistivity*. For a certain cross section and length, the *resistance* of a material can be calculated from its resistivity. The resistance of a material of a given resistivity is proportional to the length and inversely proportional to the cross-sectional area. A unit in which resistance is deliberately lumped is known as a resistor. A voltage drop appears across a resistor because the voltage must be higher at one end than at the other to cause a current to flow. The larger the resistor, the larger the voltage difference, or drop, must be to cause a given value of current to flow. A resistor dissipates energy because some of the free electrons which are set in motion by the applied voltage collide with others and generate heat. Since the energy to set the electron in motion was obtained from the power source, the result of the collisions is to cause the resistor to absorb energy from the source. As the temperature of the resistor is increased, the random motion of the free electrons is increased but more collisions take place so that there are effectively fewer electrons able to flow as a current. Therefore, the resistance of a material increases as the temperature is raised.

7. ELECTRICAL UNITS. The voltage in an electrical circuit can be compared to pressure since it is the force which causes electron flow. The open-circuit voltage of an electrical power source is called electromotive force (emf) because it is the force available to cause motion of electrons. Voltage is also called *potential* since it represents a force which can do work. The unit of voltage or potential is the *volt,* which is measured between a pair of selected points by an instrument called a *voltmeter.* The electron flow that results from the application of a voltage is called *current.* The fundamental unit of current is the *ampere,* which is measured by passing the current through an instrument called an *ammeter.* The voltage required to be impressed on a circuit to cause one ampere to flow is equal to the *resistance* of the circuit, which is measured in *ohms.* The potential difference which must exist across any circuit element containing resistance to cause a flow of electrons is often called the *voltage drop* across that element.

8. DIRECT-CURRENT CIRCUITS. a. Ohm's Law. The greater the voltage applied to a given resistance, the larger the resultant current will be. On the other hand, with a given voltage, the larger the resistance the smaller the current. Expressed mathematically, the current (I) in amperes equals the voltage (E) in volts divided by the resistance (R) in ohms, or $I = \frac{E}{R}$. This may also be stated as $R = \frac{E}{I}$ *and* $E = IR$.

Example: If the current (I) through a resistor is 5 amperes and the voltage (E) is 100 volts, what is the value of resistance?

$$R = \frac{E}{I} = \frac{100}{5} = 20 \text{ ohms}$$

b. Kirchoff's Laws. (1) *Current.* In any circuit the total amount of current leaving a given point must be exactly equal to the total amount approaching that point.

Example: In figure 5, two resistors R_1 and R_2 are connected so that *part* of the current supplied by battery B goes through each of them.

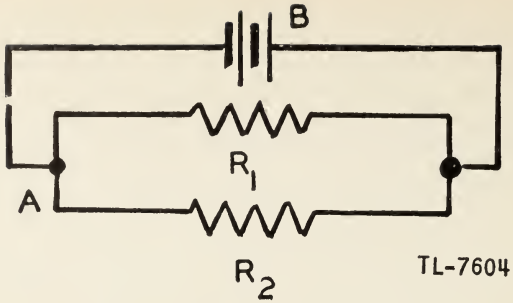

Figure 5. Kirchoff's Laws on current.

Kirchoff's first law, when applied to this circuit, simply states that the current at point A must equal the sum of currents through R_1 and R_2. This principle applies regardless of the number of resistors.

(2) *Voltage.* In any circuit the total voltage drop around any complete path is exactly equal to zero. This same idea may be expressed in slightly different words as: The voltage between two points in a circuit is the same no matter what path is taken in going from one point to the other.

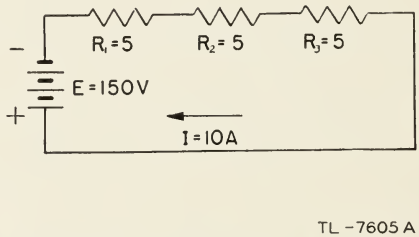

Figure 6. Kirchoff's laws on voltage.

Example: In figure 6, the voltage drop across each resistor is $E = IR = 10 \times 5 = 50$ volts. The sum of the voltage drops across the three resistors equals 150 volts, which is the battery voltage.

c. Series circuits. When resistors are connected in series, the total resistance is equal to the sum of the individual resistances. The reason for the addition of the resistance of resistors in series may be explained by applying Kirchoff's laws to the circuit of figure 6. The current I which is supplied by the battery must flow through all the resistors in the circuit. Therefore, using Kirchoff's second law,

$$E = IR, + IR_2 + IR_3.$$

Since all of the terms on the right-hand side of the equation contain the factor I, the expression may be rewritten:

$$E = I\ (R_1 + R_2 + R_3).$$

Thus it is apparent that the resistance effective in the circuit is equal to the sum of the resistances through which the current flows.

Example: In figure 7, what is the total resistance of a 2,000-ohm, a 4,000-ohm, and a 15-ohm resistor?
Since resistances in series are added,

$$R = 2{,}000 + 4{,}000 + 15 = 6{,}015 \text{ ohms}$$

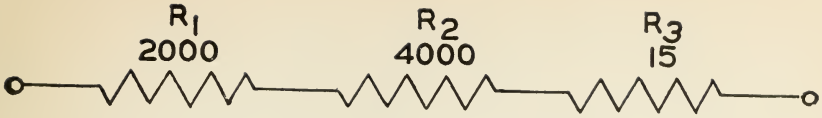

TL-7606

Figure 7. Resistors in series.

d. Parallel circuits. When resistors are connected in parallel, or shunt, the resultant equivalent resistance is always less than that of any single resistor. The manner of determining the effective resistance of several resistors in parallel can be shown by applying Kirchoff's first law to

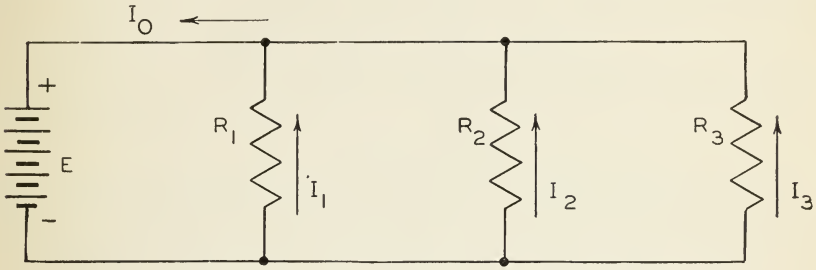

TL 8966

Figure 8. Parallel circuit.

the circuit shown in figure 8. Since the voltage across each resistor is equal to E, the three branch currents may be expressed:

$$I_1 = \frac{E}{R_1} \quad I_2 = \frac{E}{R_2} \quad I_3 = \frac{E}{R_3},$$

and the effective load on the battery may be considered a single resistor R_0 through which flows a current equal to $I_0 = \frac{E}{R_0}$.

Kirchoff's first law states that the current I_0 must equal the sum $I_1 + I_2 + I_3$. Therefore,

$$\frac{E}{R_0} = \frac{E}{R_1} + \frac{E}{R_2} + \frac{E}{R_3}.$$

The voltage may be eliminated from this expression because it appears on both sides of the equation. It may be seen, then, that the reciprocal of the equivalent resistance is equal to the sum of the resistances which are in parallel:

$$\frac{1}{R_0} = \frac{1}{R_1} + \frac{1}{R_2} + \frac{1}{R_3} + \ldots + \frac{1}{R_n} \text{ or } R_0 = \frac{1}{\frac{1}{R_1} + \frac{1}{R_2} + \frac{1}{R_3} + \ldots + \frac{1}{R_n}}$$

In the simpler case in which there are only two resistors in parallel, the equivalent resistance may be stated as

$$R_0 = \frac{R_2 R_1}{R_1 + R_2}$$

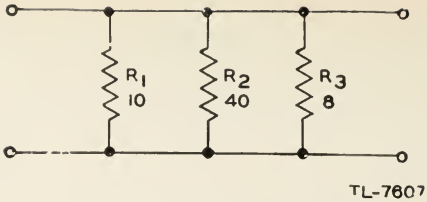

Figure 9. Resistors in parallel.

Example: Find R_o, the equivalent resistance for the three parallel resistors shown in figure 9.

$$R_o = \frac{1}{\frac{1}{10} + \frac{1}{40} + \frac{1}{8}}$$

$$R_o = \frac{1}{\frac{4 + 1 + 5}{40}} = \frac{1}{\frac{10}{40}} = \frac{40}{10}$$

$$R_o = 4 \text{ ohms}$$

e. Series-parallel circuits. (1) Series-parallel circuits are made up of combinations of resistors in series and resistors in parallel. No additional rules or formulas are necessary for solving these circuits. Series formulas can be applied to the series parts while parallel formulas can be applied to the parallel parts.

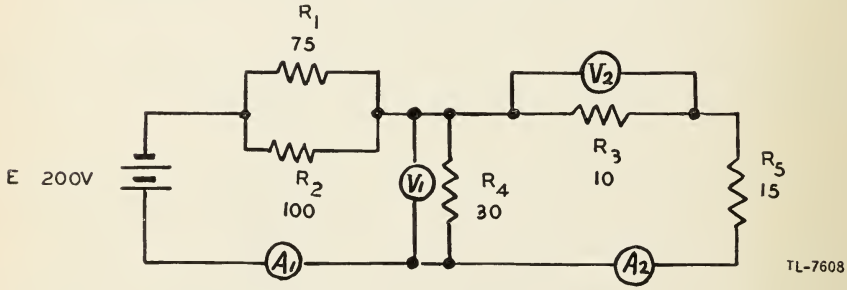

Figure 10. Series-parallel circuit.

Example: Referring to figure 10, determine the reading of ammeter A_1, the reading of ammeter A_2, the reading of voltmeter V_1, and the reading of voltmeter V_2.

(2) This problem will be solved in steps to clarify the procedure. First determine the total resistance for the entire circuit.

(*a*) *Step 1.* R_3 and R_5 are in series. Therefore their equivalent resistance is

$$R_{3,\ 5} = 10 + 15 = 25 \text{ ohms}$$

(*b*) *Step 2.* R_4 is in parallel with $R_{3,5}$. Therefore, the product-sum formula is used to find their equivalent resistance.

$$R_{3,4,5} = \frac{R_4\ (R_{3,5})}{R_4 + (R_{3,5})} = \frac{30 \times 25}{30 + 25} = 13.6 \text{ ohms}$$

(*c*) *Step 3.* R_1 and R_2 are in parallel. Therefore, their equivalent resistance is

$$R_{1,2} = \frac{R_1 R_2}{R_1 + R_2} = \frac{75 \times 100}{75 + 100} = 42.8 \text{ ohms}$$

(*d*) *Step 4.* The equivalent resistance of R_1 and R_2 (step 3) is in series with the equivalent resistance of R_3, R_4, and R_5 (step 2). Therefore, the equivalent resistance of the entire circuit is

$$R_t = (R_{1,2} + R_{3,4,5})$$
$$R_t = 42.8 + 13.6 = 56.4 \text{ ohms.}$$

(*e*) *Step 5.* The current through the battery equals the battery voltage divided by the total resistance.

$$I_t = \frac{E}{R_t} = \frac{200}{56.4} = 3.54 \text{ amperes}$$

Since the entire circuit current must flow through ammeter A_1, its reading is 3.54 amperes. There are various ways of completing this problem. One method is shown in steps 6 to 8, inclusive.

(*f*) *Step 6.* The same current which flows through A_1 must also flow through the equivalent resistance of R_1 and R_2. Therefore, the voltage drop across this resistance is

$$E_{1,2} = IR_{1,2} = 3.54 \times 42.8 = 151.5 \text{ volts}$$

Since the battery voltage is 200 volts and the resistor combination $R_{1,2}$, drops the voltage by 151.5 volts, then the reading of voltmeter $V_1 = 200 - 151.5 = 48.5$ volts.

(*g*) *Step 7.* The voltage shown by V_1 is also across R_3 and R_5 in series. Therefore, in ammeter A_2,

$$I_2 = \frac{E}{R_{3,5}} = \frac{48.5}{25} = 1.94 \text{ amperes}$$

The reading of ammeter A_2 is 1.94 amperes.

(*h*) *Step 8.* Since 1.94 amperes flows through R_3 and the resistance of R_3 is 10 ohms, then the voltage drop across R_3 is

$$E_3 = IR_3 = 1.94 \times 10 = 19.4 \text{ volts}$$

The reading of voltmeter V_2 is 19.4 volts.

f. Power. The power in an electrical circuit is expressed in watts and is equal to the product of the voltage and the current.

$$W \text{ (watts)} = EI$$

Since from Ohm's law $E = IR$, IR may be substituted for E in the power formula, giving $W = I^2R$. This gives the power in terms of current and resistance. Likewise power can be expressed in terms of the voltage and resistance as

$$W = \frac{E^2}{R}$$

Example: What is the power required for a 115-volt light bulb which draws a current of 0.87 amperes?

Substituting in the equation,

$$W = EI = 115 \times 0.87 = 100 \text{ watts}$$

g. D-C voltage dividers. A simple voltage divider may consist of two resistors connected in series across which a d-c voltage is impressed, as in figure 11. Kirchoff's Laws state that the voltage drops E_1 and E_2 must

equal the input voltage, E. Therefore the input voltage is divided into two parts.

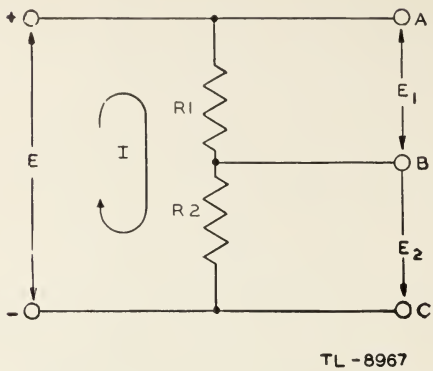

Figure 11. Simple voltage divider.

If no current is drawn out of terminals A, B, or C, a current $I = \frac{E}{R_1 + R_2}$ flows through R_1 and R_2. From Kirchoff's Laws it may be shown that

$$E = E_1 + E_2 = IR_1 + IR_2$$

so that

$$E_1 = E\frac{R_1}{R_1 + R_2} \text{ and } E_2 = E\frac{R_2}{R_1 + R_2}$$

If these expressions are written

$$\frac{E_1}{E} = \frac{R_1}{R_1 + R_2} \text{ and } \frac{E_2}{E} = \frac{R_2}{R_1 + R_2}$$

it is apparent that the ratio of the voltage across a resistor to the applied voltage is the same as the ratio of the resistance of the resistor to the total voltage divider resistance.

Example 1: In figure 11, $E =$ 100 volts, $R_1 =$ 3,000 ohms, and $R_2 =$ 1,000 ohms. What is the value of voltage E_2?

$$E_2 = E\frac{R_2}{R_1 + R^2} = 100 \times \frac{1{,}000}{1{,}000 + 3{,}000} = 100 \times \tfrac{1}{4} = 25 \text{ volts}$$

In most practical voltage dividers, however, a current flows through terminals A and B. The ratio of voltage division in such a case is not simply the ratio of resistances as in the first case. Since the current which flows to terminal B must also flow through R_1, the current in R_1 is greater than that in R_2. This fact must be carefully considered in determining the ratio of voltage division.

Example 2: Assume that the constants in the circuit of figure 11 are the same as in example 1, but that a current of 0.02 amperes flows in at terminal B.

Find the voltage E_2.

Because R_1 and R_2 are connected in series across 100 volts, some value

of current, I, flows through both resistors. The current which flows through R_1 therefore equals $I_1 + 0.02$. By Kirchoff's voltage law:

$$E = (I_1 + 0.02)\ R_1 + I_1\ R_2$$
$$100 = (I_1 + 0.02)\ 3{,}000 + I_1 \times 1{,}000$$
$$100 = 3{,}000\ I_1 + 60 + 1{,}000\ I_1$$
$$4{,}000\ I_1 = 100 - 60 = 40$$
$$I_1 = \frac{40}{4{,}000} = 0.01 \text{ amperes}$$

The voltage E_2 therefore is $E_2 = I_1\ R_2 = 0.01 \times 1{,}000 = 10$ volts. Thus it can be seen that the effect of drawing a load current is to change the ratio of voltage division from the simple resistance ratio.

9. MAGNETISM. a. Properties of magnetic substances. Magnetism is a property peculiar to certain materials such as iron, nickel, and cobalt, and is most pronounced in iron and certain of its alloys. A common bar type steel magnet is shown in figure 12. The ends of this magnet are known respectively as the *north-seeking pole* and the *south-seeking pole.* If the magnet is suspended horizontally by a thread, the N pole points toward the

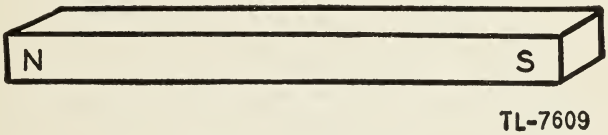

Figure 12. Bar magnet.

earth's north magnetic pole and the S pole points toward the earth's south magnetic pole. This property of magnetism also causes a magnet to attract nails, washers, steel filings, etc. *Unlike poles of magnets attract* each other while *like poles repel each other.*

b. Molecular theory of magnetism. According to the molecular theory of magnetism, each molecule of a magnetic material is itself a tiny magnet. Before a piece of iron or other magnetic material is magnetized, its molecules have a haphazard but neutralizing arrangement in which their north poles point in different directions (fig. 13). When the magnetic material is completely magnetized, its molecules are lined up with their

Figure 13. Unmagnetized iron bar.

north poles pointing in one direction (fig. 14). The piece of material is then a magnet.

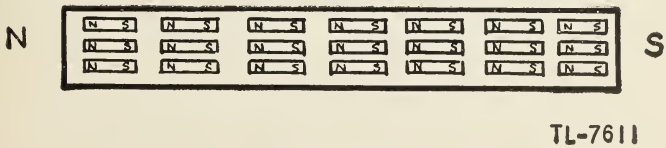

Figure 14. Magnetized iron bar.

c. Magnetic field. The surrounding space in which the magnet exerts its force is called its *magnetic field.* The field can be pictured as made up of thousands of *magnetic lines of force,* which are commonly called *magnetic flux.* The magnetic field around a bar magnet is shown in figure 15.

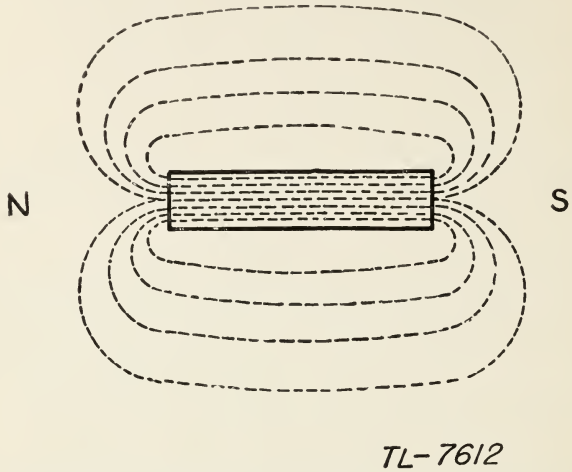

Figure 15. Magnetic field around a bar magnet.

d. Electromagnetism. Just as a magnetic field always exists between the poles of a magnet, a similar magnetic field is produced when a current flows through a conductor (fig. 16).

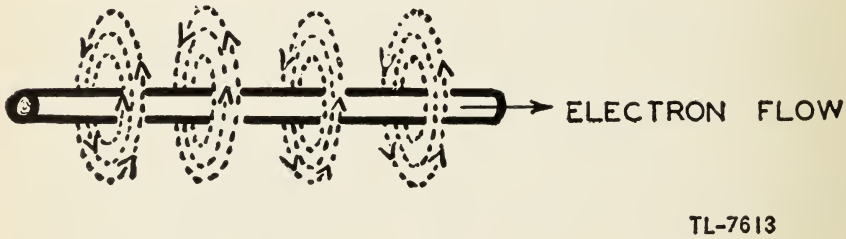

Figure 16. Magnetic field around conductor.

This magnetic field extends outward in planes at right angles to the conductor. The relation between the direction of electron flow and the di-

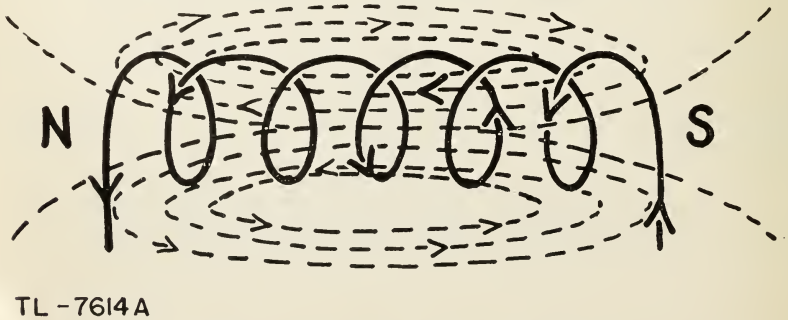

Figure 17. Magnetic field around coil.

rection of the magnetic lines of force can be determined by the left-hand rule. Thus, if the conductor is grasped in the left hand with the thumb pointing in the direction of electron flow, the fingers curl around the conductor in the direction of the magnetic lines of force. If several turns of wire are wound in the form of a coil (fig. 17), a relatively strong magnetic field can be created with a small current, since the fields of all the individual turns reinforce each other.

e. Reluctance. Magnetic lines of force encounter a certain amount of opposition, called reluctance, in all materials. If the reluctance is decreased the number of lines of force, or magnetic flux, is increased. Since iron has much less reluctance than air, the magnetic flux of a coil (fig. 17) is increased greatly by the insertion of an iron core within the coil. The lines of force inside the coil then travel through the iron, making the iron a magnet. This combination of an iron core and a coil is called an *electromagnet.* When a soft iron core is used in an electromagnet it produces a stronger magnet than if a steel core is used. This is because iron is more readily acted upon than steel by the magnetizing force of the current. In other words, soft iron is said to have greater *permeability* because it carries magnetic lines of force more easily. The total flux from an electromagnet depends on the amount of current flowing through the coil, on the number of coil turns, and on the material, cross-section, and length of the magnetic circuit for a given core. If the total flux is large, the electromagnet is said to have a high flux density; if the flux lines are few in number, the electromagnet is said to have a low flux density.

f. Magnetomotive force. The force which produces the magnetizing action in a magnetic circuit is known as the magnetomotive force, abbreviated mmf, and is measured in gilberts.

g. Core saturation. After a certain point is reached in the flux density of an electromagnet, a further increase of current through the coil does not produce a material increase in flux density. This point is known as the core saturation point.

h. Hysteresis. Some magnetism, known as *residual magnetism,* remains in the core of an electromagnet after the magnetizing force, or flow of current through the coil, has dropped to zero. Residual magnetism has the effect of causing a delay or lag in the increase of magnetic flux as the magnetizing force rises and a similar lag in the decrease of flux as the magnetizing force falls. This effect takes place when the current through the coil alternately reverses direction and the magnetic core must go through correspondingly rapid changes in magnetization. This lagging of the magnetic flux behind the magnetic force producing it is known as hysteresis.

10. SOURCES OF ELECTRICITY. a. Mechanical. (1) Just as a current flowing in a conductor produces a magnetic field around the conductor, the reverse of this process is true. A voltage can be generated in a circuit by moving a conductor so that it cuts across lines of magnetic force or, conversely, by moving the lines of force so that they cut across the conductor.

(2) In simplest terms, an electric generator (fig. 18) is a device which changes mechanical energy into electrical energy by utilizing this principle. A single loop of wire, called the *armature,* is arranged on a shaft so that it can be rotated through the magnetic field existing between the

north and south poles of the permanent magnet. To turn the armature, any suitable driving mechanism, such as a gasoline engine or electric motor, can be used.

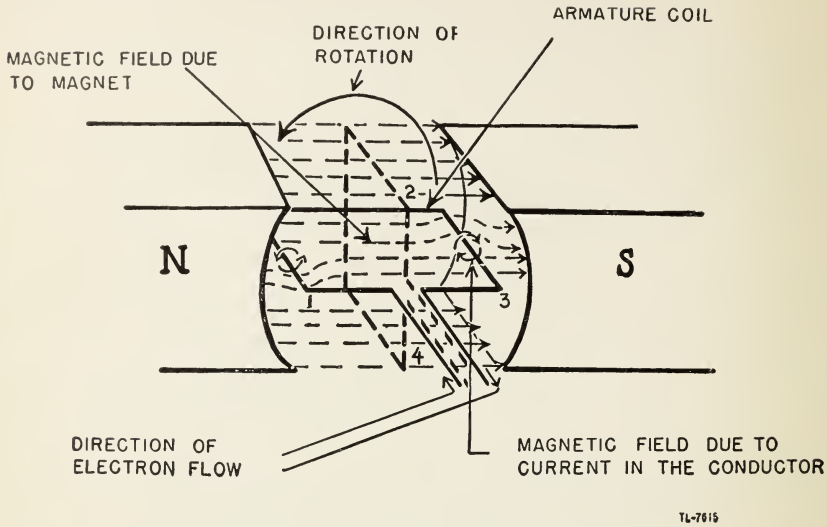

Figure 18. Simple electric generator.

(3) When the armature is rotated, the two long sides of the loop move past the pole pieces. An emf or voltage is induced in each side of the loop as it moves through the magnetic field. The direction of this induced emf is determined by the direction of the field and the direction of motion of the conductor. If an external circuit is connected to the two ends of the loop, an electron movement is in one direction, while at the other side of the loop, which is moving downward, the electron movement is in the opposite direction. These two effects are additive and the total generated voltage can be measured at the open ends of the loop.

(4) The amount of voltage induced depends upon the rate at which the lines of force are cut by this single-turn loop or by each turn of a rotating coil. When the sides of the loop are moving perpendicular to the stationary magnetic field (positions 1 and 3, fig. 18), the greatest number of lines of force are being cut and the induced voltage is maximum. When the sides of the coil are moving parallel to this stationary field (positions 2 and 4), no lines of forces are cut and the induced voltage is zero. As the rotation continues and the two sides of the coil interchange their positions, the induced emf is in the opposite direction. Thus, one complete revolution of the armature results in one cycle of an induced a-c voltage. Such a device serves as an a-c generator.

(5) In an a-c generator (fig. 19①), the ends of the armature coil are terminated at two slip rings, which as they rotate make continuous contact with two fixed brushes. In a d-c generator (fig. 19②), a switching arrangement is needed to develop an unidirectional voltage. In this case, the terminals of the coil are connected to separate metallic segments of what is known as the *commutator*. The segments of the commutator are insulated from each other and are arranged in the form of a broken ring on the shaft on which the armature rotates. As the armature revolves, the

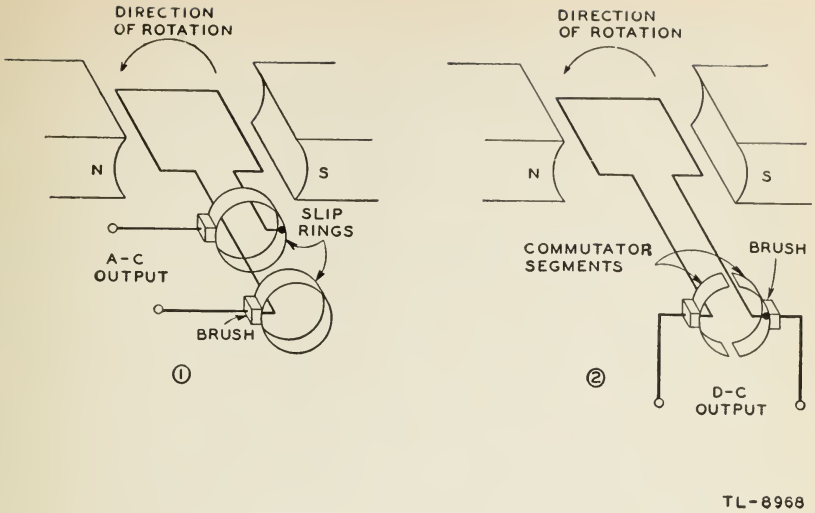

Figure 19. Methods of taking power from electric generator.

brushes make contact with segments at opposite sides of the commutator. The position of these brushes is such that the connections to the brushes are broken when the voltage induced in the coil falls to zero. After the coil rotates past the zero voltage position, an emf is induced of the opposite polarity. However, the connections of the commutator segments to the external circuit have reversed so that the output terminals of the generator are always of the same polarity. In order to eliminate the large variation in amplitude that occurs in the output of this simple machine, commercial d-c generators have many armature coils and as many commutator segments as coils.

b. Chemical. (1) Chemical energy can be transformed directly into electrical energy. When two different substances, such as zinc and cop-

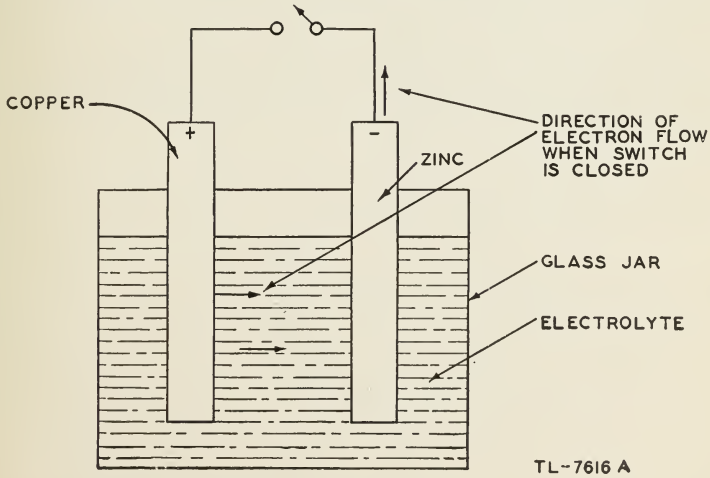

Figure 20. Primary cell.

per or zinc and carbon, are placed a little distance apart in certain chemical solutions called electrolytes, an emf exists between them. As a result of this voltage, an electron flow takes place from the zinc to the copper (or carbon) electrode when they are connected externally by a conductor. The combination of the two plates, electrolyte, and container is called a *primary cell* (fig. 20). An example is the ordinary dry cell, which uses a paste containing ammonium chloride as the electrolyte. Its emf is 1.53 volts. With other electrolytes and electrodes the emf may be from 0.7 to 2.5 volts.

(2) When the active elements in cells become exhausted the elements must be renewed or the cells discarded as in the case of dry cells. Storage or secondary cells, however, convert chemical energy into electrical energy and vice versa by chemical reactions which are essentially reversible. Therefore they can be charged by passing an electric current through them in a direction opposite to their discharge direction.

(3) There are two common types of secondary cells: the Edison cell, which uses iron as the negative pole and nickel oxide as the positive in an electrolyte consisting of a 20 percent solution of potassium hydroxide; and the lead cell, which uses lead as the negative pole and lead dioxide as the positive pole in an electrolyte of 30 percent sulfuric acid.

c. Miscellaneous. Electricity can also be generated by—

(1) The piezoelectric effect such as the voltage which is produced between opposite faces of quartz plates when they are compressed or twisted.

(2) The photoelectric effect of some materials like cesium which emit electrons under the influence of light.

(3) The thermoelectric effect such as the electromotive force which is produced by heating the junction point of two different metals.

11. ALTERNATING CURRENT. a. Generation. As the loop of the simple generator (fig. 18) is rotated, the voltage output starts from zero, gradually builds up to a maximum in one direction, falls back to zero, again builds up to a maximum in the opposite direction, and finally again drops to zero. Thus one *cycle* of a-c voltage is generated in each complete revolution of the single-turn loop. Since the frequency of an alternating current or voltage is the number of cycles per second, the speed of revolution of the loop through the magnetic field determines the frequency. A rapid rotation produces a high frequency while a slow rota-

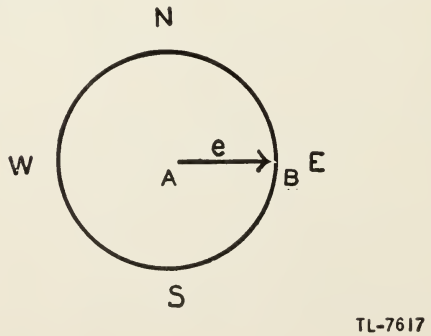

Figure 21. Designating direction and distance by vector.

tion produces a low frequency. A rapid rotation also results in the generation of a high voltage because the voltage induced in a conductor is proportional to the number of magnetic lines of force cut per second. The value of the alternating voltage therefore also can be increased by increasing the strength of the magnetic field. A higher output voltage also results if more turns of wire are added to the loop in such an arrangement that the voltage induced in each turn adds the voltage induced in the others. In commercial a-c generators, several coils usually are used to supply the strong magnetic field through which the conductors on the armature rotate. These electromagnets are called *field coils,* while the loops make up the *armature winding.* All a-c generators consist fundamentally of the field coils and the armature winding.

b. Vectors. (1) A vector is a straight line which is used to denote the direction and magnitude of a given quantity. Magnitude is denoted by the length of the line, while direction is indicated by the position of the line with respect to a reference or base line and by an arrow at the end of the line. For instance, if a certain point *B* (fig. 21) lies one mile east of point *A,* the direction and distance from *A* to *B* can be shown by the vector *e* through use of a scale of approximately ½ inch=1 mile.

(2) If a person is standing on the ground at the center of a moving merry-go-round and wishes to keep his finger pointing at a certain horse he has to turn around continually. If the merry-go-round is indicated by figure 21, he is standing at point *A* while point *B* represents a horse. The length of the vector *e* represents the distance to the horse and can be drawn to a scale of approximately ½ inch=10 feet. As *B* rotates around the circle, the vector *e* has to rotate with it in order to indicate continually the distance and direction to the horse. Vector *e* is then a *rotating vector.* A rotating vector of this sort can be used to represent the current and voltage variations of an a-c generator.

c. Sine curve. (1) The variations in the emf produced in the simple a-c generator throughout one cycle can be represented by a curve (fig. 22⑨) called a *sine curve.* The study of how this sine curve is generated is essential to provide a background for the further study of alternating current.

(2) A sine curve has a definite relation to a circle. The point of a rotating vector describes a circle as shown in figure 22. A line which is drawn from the point of the vector perpendicular to the horizontal diameter of the circle is known as the *vertical projection* of the vector. As the vector rotates, figure 22 shows that its vertical projection varies in magnitude between $+E$ and $-E$. If the value of the projection is plotted against the counterclockwise angle the vector makes with the horizontal diameter, a sine curve is produced.

(3) In figure 22, the rotating vector *E* represents one conductor in the armature of a generator rotating counterclockwise in a magnetic field. In ①, corresponding to 0° rotation of the generator armature, no flux is being cut and therefore the voltage is zero. In ②, corresponding to 45° rotation, the voltage has reached a magnitude represented by the line *A* and a 45° portion of the sine wave has been generated. Since the generator armature must turn 360° to complete one revolution, it now has rotated through 45°/360° or ⅛ of a cycle. In ③, corresponding to 90°, the voltage represented by the line *B* is a maximum in the positive direction, and 90°/360° or ¼ of a cycle of the sine wave has now been completed. In

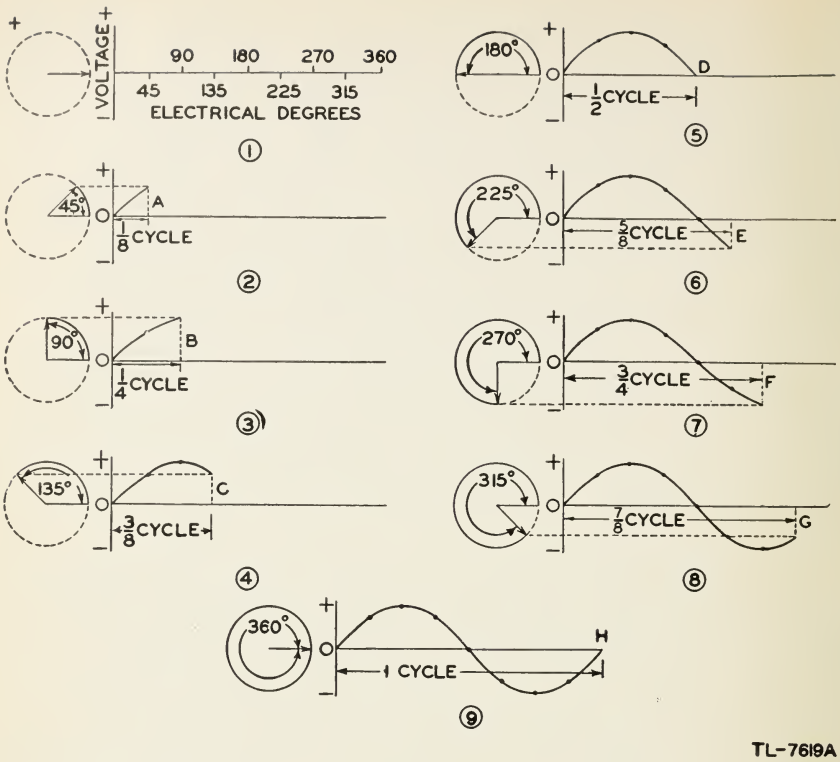

Figure 22. Evolution of sine wave.

④, corresponding to 135°, the voltage is dropping back toward zero and ⅜ of a cycle has been generated. In ⑤, corresponding to 180°, the voltage is again zero and ½ of the sine-wave cycle, called a *half-wave,* has been made. All of this half-wave is on the positive side of the axis. In ⑥, corresponding to 225°, the voltage, represented by line *E,* has again started to rise, but this time in a negative direction. In ⑦, corresponding to the 270° position, the voltage has reached a maximum in the negative direction. The voltage at this position, represented by the line *F,* equals the voltage at position in ③ but is opposite in polarity. In ⑧, corresponding to 315°, the voltage is again dropping toward zero; seven-eighths of the sine wave has now been completed. In ⑨, corresponding to 360°, the voltage has again reached zero; one cycle has been completed. Degrees measured along the sine-wave axis are known as electrical degrees. The *amplitude* of the sine wave is the voltage represented by *B* in ③—the *maximum* value of the voltage.

d. Phase angle or phase difference. (1) The phase angle or phase difference is used to denote a time difference between two quantities alternating at the same frequency. This time difference may be expressed in electrical degrees or in fractions of a cycle per second. In either case, *time* is indicated.

(2) Figure 23 shows two one-cycle sine waves which are generated in a manner exactly similar to the one illustrated in figure 22. Here, how-

ever, two rotating vectors are used so that two sine waves are generated at the same time. The two rotating vectors are 90° or one-fourth cycle apart and maintain this relationship as they rotate. Thus, when vector A reaches position two or the 90° point, vector B is just starting from zero.

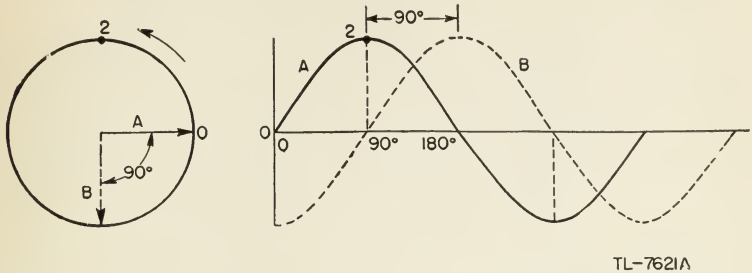

Figure 23. Sine waves with 90° phase difference.

The phase difference also is shown clearly by the difference in electrical degrees along the sine-wave axis. Curve A is at the 90° point when curve B starts. A is therefore said to lead B by a phase angle of 90°, or B is said to lag A by 90° or one-fourth cycle.

(3) Figure 24 can be explained in a manner similar to figure 23, except that the two sine-wave voltages are 180° or one-half cycle apart. As can be seen from the relation of the rotating vectors, the direction of one voltage is exactly opposite to that of the other.

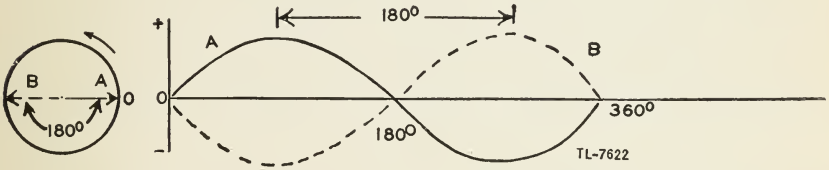

Figure 24. Sine waves with 180° phase difference.

e. Use of vectors. (1) Since a vector is a straight line which is used to indicate both direction and magnitude, the addition and subtraction of vectors is somewhat complicated. For the purpose of explaining these operations, it may be helpful to assume that each vector represents the motion of a body along a straight line.

(2) For example, if an airplane is flying due north and the wind is blowing from the west, the motion of the airplane relative to the ground may be determined by adding the two motions vectorially.

Figure 25① shows the airplane and the velocities that result from having its own engine and because of the wind. The actual velocity of the airplane relative to ground may be found by drawing vectors to scale to represent the two component velocities (fig. 25②). To perform the vector addition, it is first assumed that the plane is acted on by the wind only. The motion of the airplane would then be eastward at 30 miles per hour, and if the line OX represents 30 miles, the airplane will move from O to X in 1 hour. Second, it is assumed that the airplane is acted on by its own engine only, and that the wind is not blowing. The air-

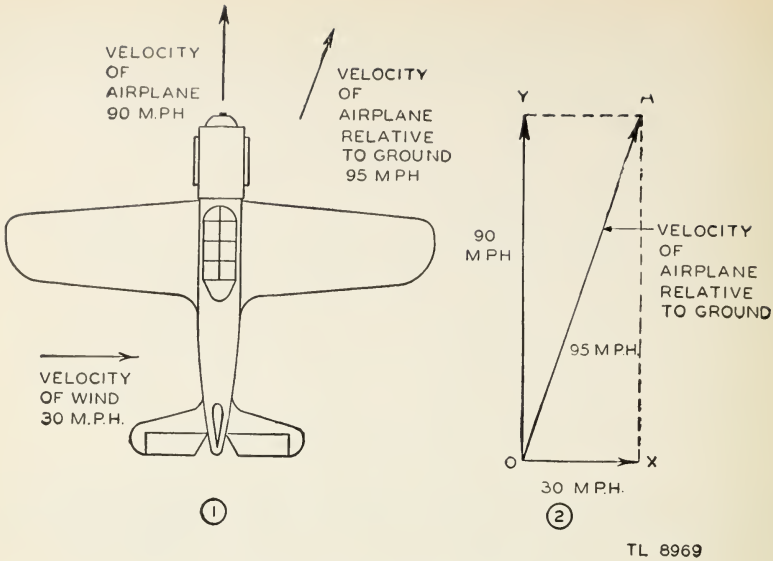

Figure 25. Vector addition.

plane is now at position X and it is moved at 90 miles per hour along the line XA, parallel to the line OX which represents the velocity. At the end of 1 hour, the airplane will be at position A. If the two forces act on the airplane simultaneously, it moves along the line OA, and will arrive at point A 1 hour after leaving point O. The line OA is the *resultant* or vector *sum* of the two velocities.

(3) A vector difference is obtained by *reversing* the vector to be subtracted and *adding* this reversed vector to the first. For example, the

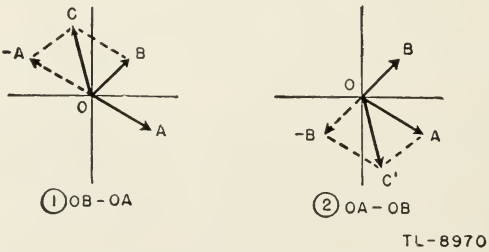

Figure 26. Vector subtraction.

process of finding the vector difference $OB - OA$ is shown in figure 26①. Vector OA is reversed, so that it becomes $-OA$, and this vector is added to OB to obtain the resultant, OC. If the order of the subtraction is reversed, then vector OB is subtracted from vector OA, as in figure 26②, and the resultant OC' is the negative of OC in ①.

(4) Since a sine wave is generated by the rotation of a vector, as illustrated in figure 23, vectors are very convenient in examining the relationships among quantities that vary sinusoidally. The vector diagram of an a-c circuit can be drawn only if it is assumed that the rotating

vectors are frozen at some instant of time. For example the vectors of figure 24 may be stopped at the instant that vector A reaches point two, producing the vector diagram shown in figure 27①. Since the conventional direction of rotation of rotating vectors is counterclockwise, it is

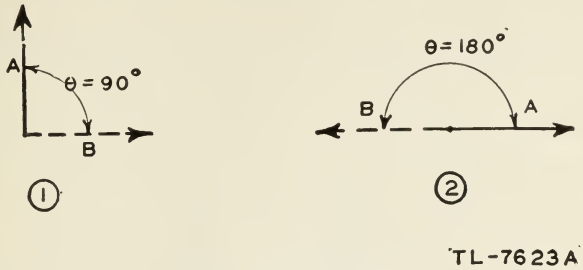

Figure 27. Vector diagrams of representing sinusoidal quantities.

apparent that vector A leads vector B by the angle θ, which is 90° in this case. The angle θ is called the *phase angle* and it is measured in electrical degrees to indicate the *phase difference* between the electrical quantities by vectors A and B. Figure 27② shows the vector diagram for two equal sine-wave voltages which are 180° out of phase. The resultant of these two voltages is zero at every instant of time since the vector sum of A and B is zero.

12. INDUCTANCE. a. Self-inductance. (1) Any change of current, either a rise or a fall, in a conductor causes a change of the magnetic flux around the conductor. Since a voltage is induced when magnetic flux lines cut across a conductor, this change in flux causes the generation of a voltage in the *conductor itself* as well as in nearby circuits. Therefore, in a coil consisting of a few turns of wire, a *varying current* produces magnetic flux around one turn which cuts across adjacent turns and induces a voltage in them. This induced voltage is always of opposite polarity to the applied voltage. The sum of the voltages induced in all the turns is called a *counter emf* or a *back emf* because it opposes a change in the current. Thus, if the current is increasing, the counter emf tries to prevent the increase; if the current is decreasing, the counter emf tries to prevent the decrease. The ability of a circuit to generate a counter emf is known as the *inductance* of the circuit. Therefore, the greater the opposition to a change in current, the greater is the inductance in a circuit.

(2) The symbol for inductance is L, and the unit of inductance is the *henry*. A coil has an inductance of 1 henry when a voltage of 1 volt is induced by a uniform rate of current change of 1 ampere per second. Since the henry is a rather large unit for use in some parts of radio circuits, the millihenry (*mh*) representing one-thousandth (10^{-3}) of a henry, and the microhenry (μh) representing one-millionth (10^{-6}) of a henry are used frequently.

b. Mutual inductance. (1) When two coils are so placed in relation to each other that the magnetic lines of force produced by and encircling one coil link the turns of the other, the coils are said to be *inductively coupled*. If an a-c voltage is applied to one coil, an a-c voltage is induced in the second coil (fig. 28). This effect of linking two inductors is called mutual inductance (abbreviated M) and also is measured in henrys.

As in the case of self-inductance, the induced voltage is opposite in direction to the exciting voltage. The amount of mutual inductance present between two circuits depends upon their size and shape, their relative positions, and the magnetic permeability of the medium between the two.

(2) In figure 28, not all of the lines of force set up by coil *A* cut the turns of coil *B* because the high reluctance of the magnetic circuit causes

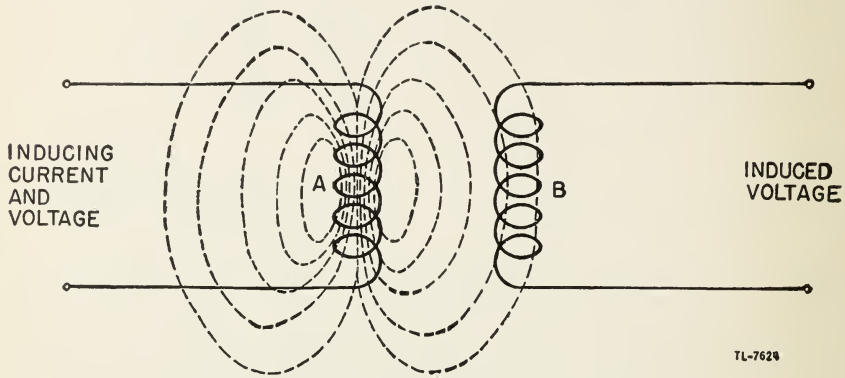

Figure 28. Mutual inductance of two coils.

most of the flux lines to follow paths which do not link coil *B*. The extent to which two inductors are coupled is expressed by a *coefficient of coupling.* This term is unity when all of the flux set up by one coil links the other, and it expresses the ratio of the mutual inductance actually present to the maximum value obtainable with unity coupling.

c. Inductors in parallel. The total inductance of inductors in parallel is calculated in exactly the same manner as for resistors in parallel, provided the coils are far enough apart to make the effects of mutual inductance negligible.

d. Inductors in series. When the coils are far enough apart to make the effects of mutual inductance negligible, inductors in series are added in the same manner that resistors in series are added. However, when two inductors are in series and so arranged that the field of one links the other, the net inductance is $L1 + L2 \pm 2\,M$. The plus-or-minus sign ($\pm$) must be used in the general expression because the emf induced in one coil by the flux produced by the other may either aid or oppose the counter emf produced by self-induction. If the coils are arranged so that one can be rotated relative to the other to cause a variation in the coefficient of coupling, the effective inductance can be varied. Such a device is called a variometer.

e. Inductive reactance. (1) In a-c circuits the current changes continuously, causing a continuous change in the flux around an inductor. This induces a counter emf in the coil which opposes the flow of the alternating current. This opposition is known as *reactance.* Since the opposition is caused by an inductor it is called inductive reactance, which is denoted by X_L.

(2) The magnitude of the counter emf is proportional to the rate of change of the current through the coil. In figure 29① it can be seen that the slope of the current waveform is greatest in the regions between

B and C and between E and F. Since the slope shows the rate of change of the current, it is apparent that the counter emf is a maximum at some time between B and C and again between E and F. Thus, the

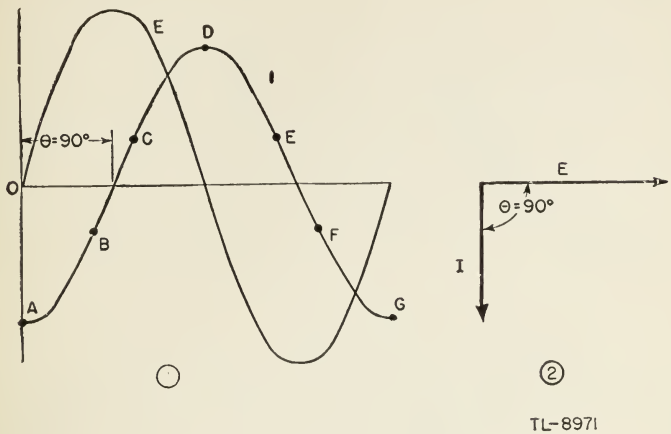

Figure 29. Phase relations in pure inductance.

voltage across the inductor is a maximum when the current through the coil is passing through zero. In the same way, at points A, D, and G the rate of change of current is instantaneously zero, so that the voltage induced in the coil is zero. The current, through a pure inductance, then lags behind the voltage across the coil by 90°. The vector diagram for an inductor is shown in figure 29②.

(3) Since any practical inductor must be wound of wire which has resistance, it is not possible to obtain an inductor which is purely inductive. The resistance associated with the inductor may be considered as a separate resistor in series with an inductor which is purely inductive (fig. 30①). If an alternating current I_o flows through the inductor, a voltage drop occurs across both the resistance and the inductance. The drop across the resistance is in phase with the current and the drop across the inductance leads the current by 90°. The relative phase of these two voltages is shown in figure 30②. If the voltages E_L and E_R are added at every instant the sum is the curve E_o. The vector diagram in ③ shows this addition more simply than is possible with the sine waves shown in ②.

(4) Since the counter emf of an inductor is proportional to the rate of change of current, the counter emf generated at a high frequency is larger than that generated at a low frequency. The reactance of a coil is stated in *ohms* and may be calculated if the frequency f, in cycles per second and the inductance L, in henrys are known. The formula is

$$X_L = 2\pi fL = 6.2832\, fL$$

Example: What is the inductive reactance of a coil, operating at a frequency of 500 cycles per second, which has an inductance of 2 henrys?

$$X_L = 2\pi fL = 6.2832 \times 500 \times 2 = 6{,}283 \text{ ohms.}$$

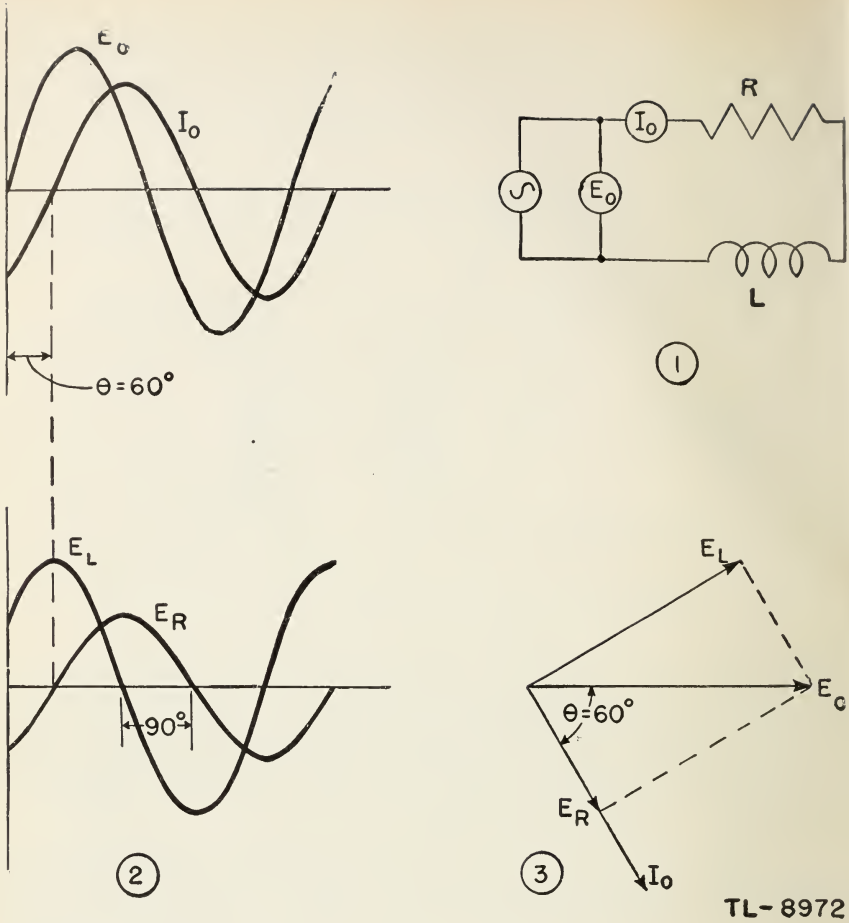

Figure 30. Phase relations in resistive inductor.

f. Transformers. (1) A transformer consists of two coils which have mutual inductance between them. A transformer can have either an iron core (fig. 31) or an air core, depending on the frequency at which it is to

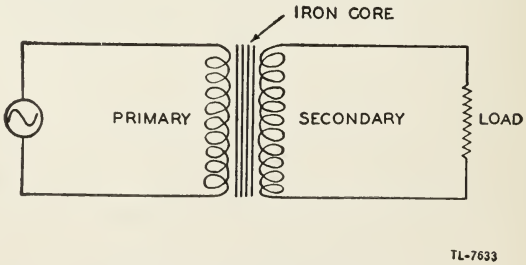

Figure 31. Simple transformer.

be operated. The *primary winding* of a transformer is connected to the a-c source and a voltage is induced in the *secondary winding*. A trans-

former is designed to have either a step-up, a step-down, or a 1-to-1 ratio.

(2) In a perfect transformer, all the magnetic flux lines produced by the primary winding link every turn of the secondary winding. If the primary has 200 turns, and an a-c voltage of 100 volts is applied, the flux set up by the primary will be large enough to induce ½ volt in each turn. Since all of this flux also links each turn on the secondary, a voltage of ½ volt is induced in each secondary turn. If the secondary winding consists of 10 turns, the total secondary voltage is 10 turns × ½ volt per turn = 5 volts, and the transformer is said to have a step-down ratio. On the other hand, if the secondary has 400 turns, the secondary voltage is 200 volts, and the transformer has a step-up ratio. For a perfect transformer, the ratio of the primary and secondary voltage is exactly the same as the ratio of the number of turns in the two windings. This may be stated usefully as

$$\frac{N_p}{N_s} = \frac{E_p}{E_s}$$

where N_p = number of turns in the primary winding, N_s = number of turns in the secondary winding, E_p = voltage across the primary winding, and E_s = voltage across the secondary winding.

Example: A transformer has a step-up ratio of eight. If an a-c voltage of 125 volts is applied to the primary winding, what voltage is obtained from the secondary?

$$\frac{N_p}{N_s} = 8 \quad E_p = \frac{N_p}{N_s} E_s = 8 \times 125 = 1{,}000 \text{ volts}$$

(3) The current that flows in the secondary winding as a result of the induced voltage must produce a flux which exactly equals the primary flux. The magnetizing force of a coil is expressed as the product of the number of turns in the coil times the current flowing in it. Thus, in a transformer,

$$N_p \times I_p = N_s \times Is \text{ or} \frac{N_p}{N_s} = \frac{I_s}{I_p}$$

it can be seen from this expression that when the voltage is stepped up, the current is stepped down, and vice versa.

(4) Although it has been assumed that unity coupling exists between the primary and secondary windings, it is impossible to build a transformer with this degree of coupling. Consequently, the actual transformation ratio of a transformer is less than the turns ratio. However, in properly designed iron-core transformers practically all of the flux lines link all turns of both windings, so that the turns ratio may be used as the transformation ratio within the accuracy required of most radio work. In r-f transformers, on the other hand, the losses that would occur because of the circulating currents set up in any magnetic core material are excessive. Therefore, transformers which are used for high frequencies usually do not have magnetic cores. The reluctance of air to the flow of magnetic flux is so great that only a relatively small number of flux lines cut both the primary and the secondary windings. Therefore, the simple voltage and current ratios which may be used with iron-core transformers do not hold true with air-core transformers.

13. CAPACITANCE. a. General. (1) Like electrical charges repel each other so that one electron in space exerts a force on another. If two

metal plates are connected as shown in figure 32①, both plates are at ground potential. If there were more electrons on plate X than on plate

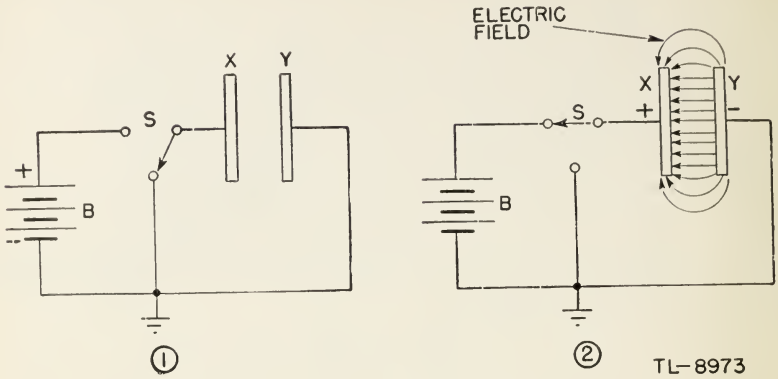

Figure 32. Simple capacitor.

Y, the repelling force between the two groups would cause a flow of electrons through ground to equalize the number of electrons on the two plates. However, if the switch is thrown to the other position, plate X is connected to the positive terminal of the battery, and the attraction of the battery removes electrons from plate X. As these electrons move away, the repelling force between the two plates tends to decrease, so that other electrons can move up from ground and accumulate on plate Y. Since plate X has fewer electrons than before, it is *positive* with respect to ground, but the potential of plate Y cannot change because it is still connected to ground. Thus, a voltage exists between plates X and Y. The flow of electrons can continue only until the voltage between X and Y equals the battery voltage. Because the number of electrons or *charges* on the two plates is now unequal, they are said to be *charged.*

(2) There exists between the two plates thousands of imaginary lines which represent the paths along which the repelling force of the electrons would act on a free electron inserted between the two plates. The electron would tend to move along a line of force toward the plate where the deficiency of electrons exists (fig. 32②). These lines of force are an *electric field* in which electrical energy is stored by creating a difference of potential. If the medium between the two plates is an insulating material, or *dielectric,* no electron flow can take place in it and the difference of potential between the two plates will remain until a path is provided for electrons to flow from plate Y to plate X.

(3) The measure of the ability of two electrodes to store energy in an electric field between them is called *capacitance.* A device which is designed to be able to store a relatively large amount of energy in an electric field is called a *capacitor.* The capacitance of a capacitor varies directly with the area of the plates and the type of dielectric material used between the plates, and the capacitance decreases as the distance between the plates is increased.

(4) The unit of capacitance (C) is the *farad.* A capacitor has a capacitance of 1 farad when a current of 1 ampere flowing into its plates for 1 second charges it to 1 volt. Since a 1-farad capacitor would be tremendously large, the practical units of capacitance used in radio

work are the microfarad (μf), which is equal to one-millionth (10^{-6}) of a farad, and the micromicrofarad ($\mu\mu$f), which is equal to one million-millionth (10^{-12}) of a farad.

b. Capacitors in parallel. The total capacitance of capacitors in parallel is found by *adding the value of each capacitor.* This is the same method that was used for resistors in *series.*

c. Capacitors in series. The total capacitance of capacitors in series is calculated in the *same method that was used for resistors in parallel:*

(1) For capacitors of equal capacitance, divide the value of one capacitor by the number of capacitors. Thus four 20-microfarad capacitors connected in series have a total capacitance of $^{20}/_{4} = 5$ microfarads.

(2) For two capacitors of unequal capacitance:

$$C_t = \frac{C_1 \times C_2}{C_1 + C_2}$$

(3) For more than two capacitors in series:

$$C_t = \frac{1}{\frac{1}{C_1} + \frac{1}{C_2} + \frac{1}{C_3} + \cdots \frac{1}{C_n}}$$

d. Capacitive reactance. (1) A capacitor which is initially uncharged tends to draw a large current when a voltage is first applied. When the charge on the capacitor reaches the applied voltage, no current flows. Thus if a sine-wave voltage is applied to a pure capacitance, the current is a maximum when the voltage begins to rise from zero, and the current is zero when the voltage across the capacitor is a maximum (fig. 33①). As a result, the alternating current through a capacitor leads the

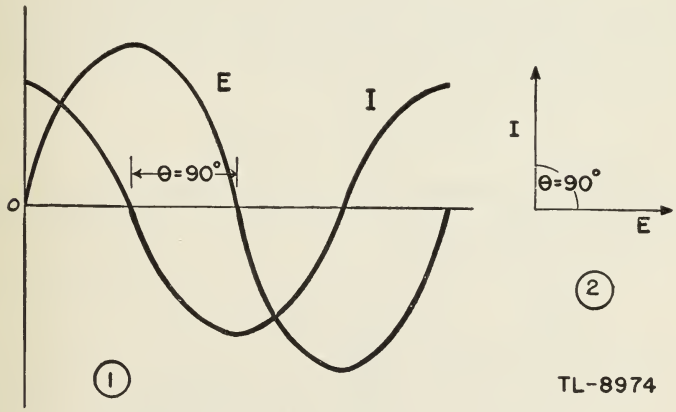

Figure 33. Phase relations in pure capacitance.

a-c voltage across it by 90°. This phase relationship is most easily seen in the vector diagram (fig. 33②).

(2) Since the leakage resistance of most capacitors is very high, the phase angle of a capacitor is very nearly 90°, as for pure capacitance. However, the presence of a small amount of leakage causes the capacitor

to act as a pure capacitance shunted by a high resistance (fig. 34①). The current drawn by the pure capacitance leads the applied voltage by 90°

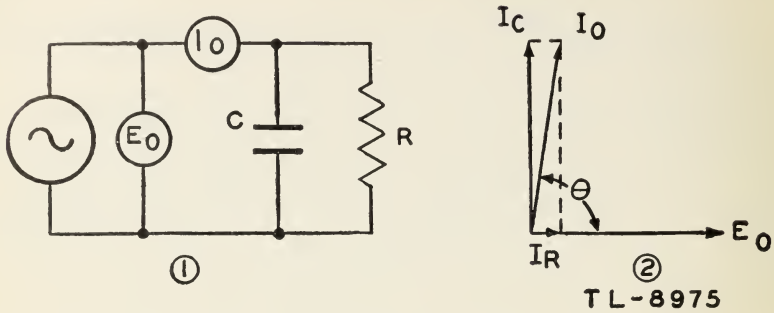

Figure 34. Phase relations in a capacitor with poor dielectric.

(fig. 34②), and the current drawn by the resistor is in phase with the applied voltage. Since the resistance in parallel with the capacitance is very high, the resistance component of the current is relatively small. Consequently the total current, I_o, leads the applied voltage by an angle θ which is slightly less than 90°.

(3) Since a capacitor of large capacitance can store more energy than one of small capacitance, a larger current must flow to charge a large capacitor than to charge a small one. Also, because it takes time to charge a capacitor, a greater charge can be put on a given capacitor within one-quarter of a cycle of a low frequency than of a high frequency. Since the amplitude of the alternating current that flows in a capacitor depends on both the size of the capacitor and the frequency, it is evident that the capacitor offers opposition to the flow of alternating current. This opposition is called *capacitive reactance,* (X_c), and it is measured in ohms. The formula for capacitive reactance in ohms, calculated from f in cycles per second and C in farads, is

$$X_c = \frac{1}{2\pi fC} = \frac{1}{6.2832fC}$$

Example: What is the capacitive reactance of a capacitor, operating at a frequency of 1,000 cycles per second, which has a capacitance of 2 microfarads or 2×10^{-6} farads?

$$X_c = \frac{1}{6.2832fC} = \frac{1}{6.2832 \times 1{,}000 \times 2 \times 10^{-6}} = 79.6 \text{ ohms}$$

14. ALTERNATING-CURRENT CIRCUITS. a. Impedance. (1) Impedance is the total opposition to the flow of alternating current in a circuit which contains resistance, capacitive reactance, and inductive reactance in some combination. The symbol for impedance is Z.

(2) A modification of Ohm's Law is needed for calculations in circuits which contain reactance. The simple statement $I = \frac{E}{R}$ is not true in an a-c circuit because reactance introduces a phase angle between the current and voltage. The impedance of an inductor in series with a resistor does not equal the arithmetic sum of the inductive reactance and the resistance.

Rather, the impedance in ohms is

$$Z = \sqrt{R^2 + X^2_L}$$

Likewise the impedance of a resistor and capacitor in series is

$$Z = \sqrt{R^2 + X^2_c}$$

(3) It has been shown that the voltage across a pure inductance leads the current by 90° and that the voltage across a pure capacitance lags the current by 90° (figs. 29 and 33). Therefore, capacitive reactance is considered *negative* and inductive reactance is considered *positive* to account for the fact that their effects in a circuit are 180° out of phase with each other. In the general case, then, the impedance of an a-c circuit is

$$Z = \sqrt{R^2 + (X_L - X_c)^2}.$$

Example: What is the impedance at 60 cycles per second of the series combination of a resistor of 2,000 ohms, a capacitor of 1 microfarad, and an inductor of 10 henrys?

$R = 2{,}000$

$$X_c = \frac{1}{2\pi fC} = \frac{1}{6.2832 \times 60 \times 10^{-6}} = \frac{10^6}{6.2832 \times 60} = 2{,}650 \text{ ohms}$$

$$X_L = 2\pi fL = 6.2832 \times 60 \times 10 = 3{,}770 \text{ ohms}$$

$$\begin{aligned} Z &= \sqrt{R^2 + (X_L - X_c)^2} \\ &= \sqrt{(2{,}000)^2 + (3{,}770 - 2{,}650)^2} \\ &= \sqrt{2{,}000^2 + 1{,}120^2} \\ &= \sqrt{4{,}000{,}000 + 1{,}255{,}000} \\ &= \sqrt{5{,}255{,}000} = 2{,}300 \text{ ohms} \end{aligned}$$

(4) Thus the impedance of an a-c circuit equals the square root of the sum of the square of the resistance plus the square of the net reactance. This relationship of electrical quantities is the same as the relationship of the length of the hypotenuse of a right triangle to the lengths of

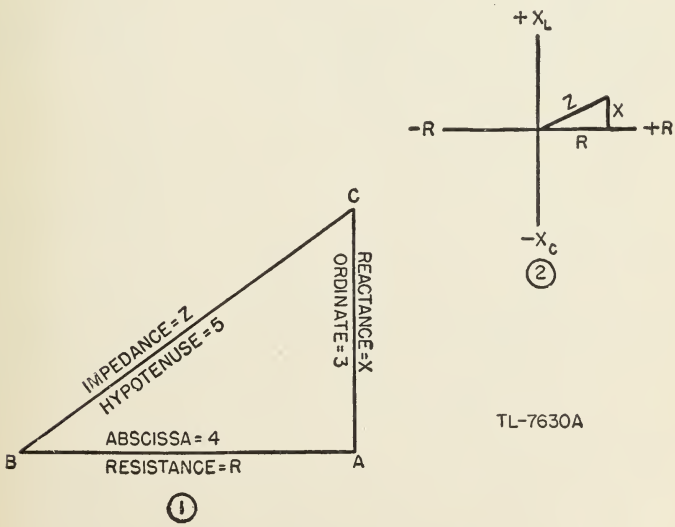

Figure 35. Impedance triangle.

the two shorter sides. For example, a right triangle having a base (abscissa) 4 inches long and a vertical side (ordinate) 3 inches long has an hypotenuse 5 inches long, $= \sqrt{4^2 + 3^2}$, not $3 + 4 = 7$ inches. The relationship between resistance, reactance, and impedance can therefore be shown as the *impedance triangle* (fig. 35). Where both inductive and capacitive reactances are present, the ordinate AC of figure 35① represents the net reactance, or the difference of the two reactances, which has the characteristics of the larger reactance. For example, 50 ohms of inductive reactance and 25 ohms of capacitive reactance have a net inductive reactance of 25 ohms. Figure 35② shows how X_L, representing positive or inductive reactance, is plotted on the Y axis above the horizontal baseline, while X_c, representing negative or capacitive reactance, is plotted on the Y axis below the horizontal baseline. This method of plotting is possible because the inductive and capacitive reactances are 180° out of phase with each other.

(5) As an example of the use of the impedance triangle, a series circuit (fig. 36①) containing a 0.4-microfarad capacitor and a 200-ohm

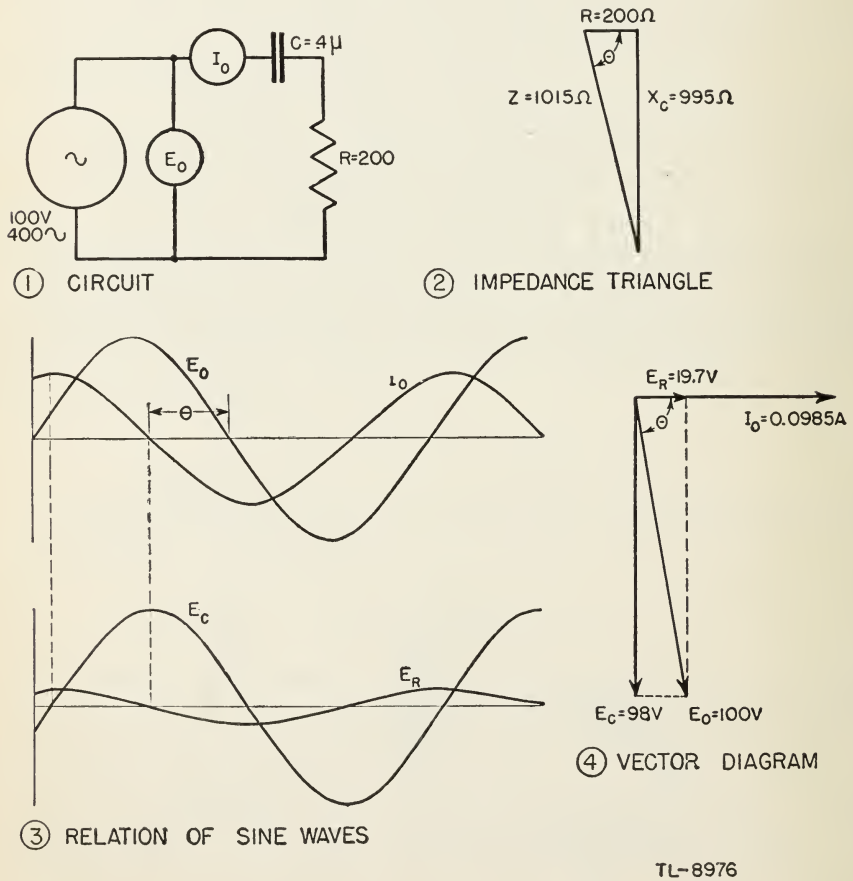

Figure 36. Phase relations in a series circuit containing resistance and capacitance.

resistor will be solved using an operating frequency of 400 cycles per second. These values

$$R = 200 \text{ ohms}$$

$$X_c = \frac{1}{2\pi fC} = \frac{L}{6.2832 \times 400 \times 0.4 \times 10^{-6}} = \frac{10^{-6}}{1005} = 995 \text{ ohms}$$

are then used to construct the two sides of the impedance triangle (fig. 36②).

The total impedance in the circuit is:

$$Z = \sqrt{R^2 + X_c^2} = \sqrt{200^2 + 995^2}$$

$$Z = \sqrt{40{,}000 + 990{,}000} = \sqrt{1{,}030{,}000} = 1{,}015 \text{ ohms}$$

Since the impedance of the circuit is known, the voltage drop across the capacitor and across the resistor can be found to permit construction of the vector diagram of the circuit.

$$I_o = \frac{E_o}{Z} = \frac{100}{1{,}015} = 0.0985 \text{ amperes.}$$

$$E_R = I_oR = 0.0985 \times 200 = 19.7 \text{ volts.}$$

$$E_c = I_cX_c = 0.0985 \times 995 = 98 \text{ volts.}$$

The vector diagram (fig. 36④), is constructed by drawing these values to scale. Note the similarity between the vector diagram and the impedance triangle. The phase angle, θ, may be found from either diagram. Compare the vector diagram with the sine waves shown in figure 36③. Because the vector diagram shows the relationships so much more clearly than the sine waves, vectors are widely used in this way.

(6) Since the total impedance (Z) in an a-c circuit corresponds to the resistance in a d-c circuit, Z can be substituted for R in Ohm's law. Thus for d-c circuits—

$$I = \frac{E}{R}$$

$$E = IR$$

$$R = \frac{E}{I}$$

For a-c circuits—

$$I = \frac{E,}{Z} \text{ or } I = \frac{E}{\sqrt{R^2 + (X_L - X_c)^2}}$$

$$E = IZ \text{ or } E = I\sqrt{R^2 + (X_L - X_c)^2}$$

$$Z = \frac{E}{I} \text{ or } \sqrt{R^2 + (X_L - X_c)^2} = \frac{E}{I}$$

b. A-C voltage dividers. Voltage dividers for alternating current are quite similar to d-c voltage dividers. However, because capacitors and inductors oppose the flow of alternating current as well as resistors,

voltage dividers for alternating voltages may take any of the forms shown in figure 37.

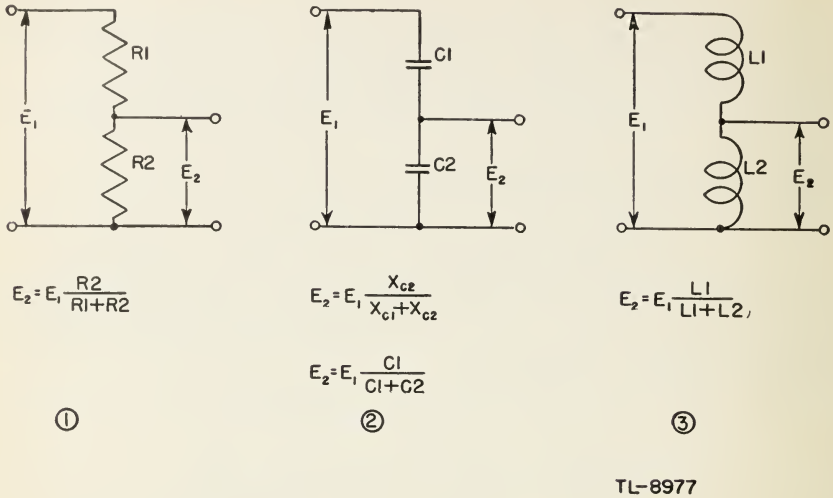

Figure 37. Simple a-c voltage dividers.

Since the impedances within each divider are of the same type, the output voltage is in phase with the input voltage. However, by using combinations of different impedances, the phase of the output may be shifted relative to the input at the same time that the amplitude is reduced. Several varieties of a-c voltage dividers of this type are shown in figure 38. The expression for the output voltage is shown in each case. Note that the ratio of output voltage to input voltage in all cases is equal to the ratio of the impedance across which the output appears to the total impedance of the voltage divider. These expressions are correct only if negligible current is drawn by the load on the output terminals.

c. Resonant circuits. (1) A resonant circuit is one in which the inductive reactance is equal to the capacitive reactance.

(2) A series resonant circuit consists of a combination of inductance, capitance, and resistance in series (fig. 39①). Since the inductive and capacitive reactances are equal and opposite in polarity at the resonant frequency, they balance each other and the actual total reactance is reduced to zero. Therefore, a large current flows through meter M since at resonance the impedance is minimum because the only opposition to the current flow is that of the resistance in the circuit. This resistance is caused by the wire in the inductor and the wire connecting the circuit components. The impedance in ohms across the terminals of the circuit is

$$Z = \sqrt{R^2 + (X_L - X_c)^2}.$$

At frequencies below resonance, accordingly, the series circuit acts like a capacitor plus a resistor. At frequencies above resonance, it acts like an inductor plus a resistor. Since a large current flows at resonance, the actual voltages across the inductor and capacitor may be many times the

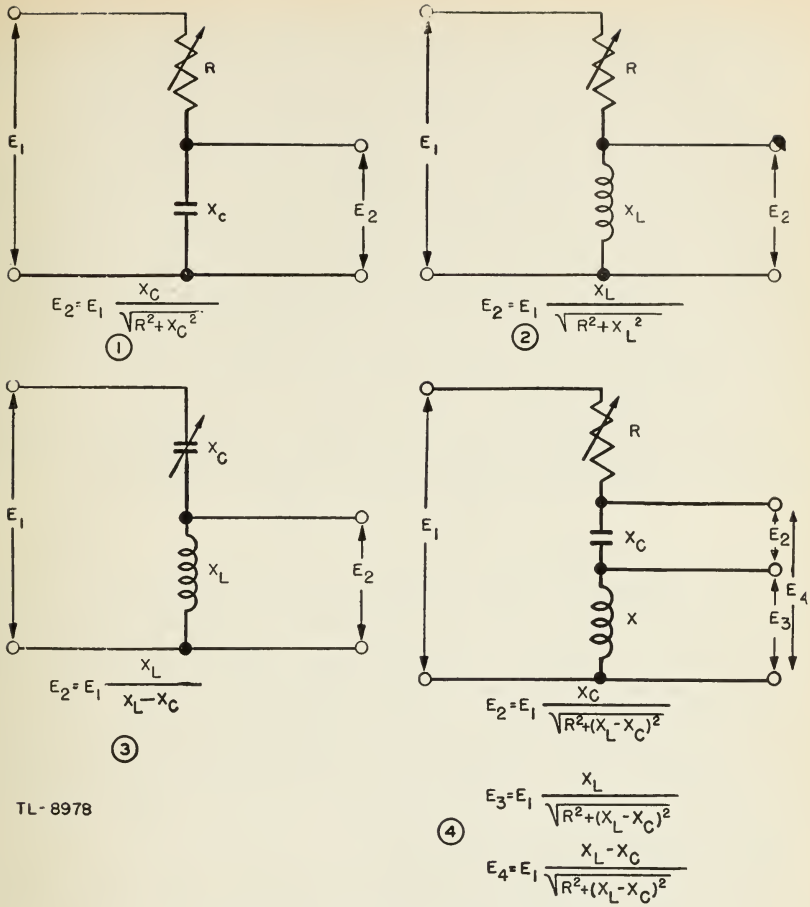

Figure 38. Complex a-c voltage dividers.

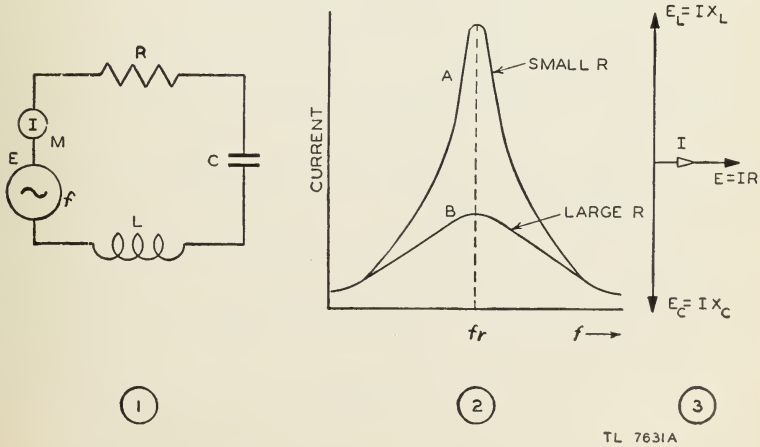

Figure 39. Series resonant circuit and its current curve.

voltage applied to the circuit. Figure 39③ shows how a large resonant current will develop large canceling voltage drops across L and C. Since a large voltage exists across the capacitor, it may flash over even though the capacitor is rated considerably higher than the applied voltage E.

(3) If a graph of the current is plotted against the frequency to include the resonant frequency f_r (fig. 39②), the resultant curve is called a *resonance curve*. Note that if the total resistance of the circuit is large, the curve is broader and flatter than if the total resistance is small. The circuit which curve A represents is said to be much more selective than the circuit represented by curve B. This means that under the conditions of curve A, a circuit is better able to discriminate against, or refuse, the frequencies on either side of resonance. This property of the series circuit is often used where it is required to pass current of a certain frequency at low impedance while a high impedance is offered to the flow of currents at other frequencies.

(4) A factor known as Q is used to show the sharpness of resonance of a tuned circuit. This factor is usually expressed as the ratio of the inductive reactance at resonance to the resistance as follows:

$$Q = \frac{X_L}{R} \text{ or } Q = \frac{2\pi fL}{R}.$$

The Q of resonant circuits ranges from 20 to 100 for circuits involving iron-core coils and to as high as 30,000 for silver-plated resonant cavities. Another way of defining Q is to say that it is a comparison between the total power *in* a tuned circuit and the power which is *dissipated* by the resistance in the circuit. Since no power is dissipated in a pure inductance or in a pure capacitance, the resistance should be kept as low as possible in order to realize the greatest efficiency of the tuned circuit. In practice, since nearly all of the resistance of a circuit is in the coil, the ratio of the inductive reactance to the resistance is especially important. The higher the Q of a coil, the better the coil.

(5) A *parallel resonant circuit* consists of a combination of inductance, capacitance, and resistance connected in parallel (fig. 40①). In the parallel circuit, the main-line current is minimum at the resonant frequency and therefore the impedance is very high. The impedance at resonance for a parallel circuit is expressed by

$$Z = \frac{(2\pi fL)^2}{R}$$

The impedance in a parallel resonant circuit can also be expressed as a function of Q as—

$$Z = 2\pi fLQ$$

This formula shows that the impedance of such a circuit is directly proportional to its Q at resonance.

Example: What is the impedance at resonance of a parallel resonant circuit operating at 1,000 kilocycles per second with an inductance of 60 microhenrys and a resistance of 20 ohms?

Solution: 1,000 kilocycles $= 10^6$ cycles; 60 microhenrys $= 6 \times 10^5$ henrys. Substituting in the formula

$$Z = \frac{(2\pi fL)^2}{R}$$

$$Z = \frac{(6.28 \times 10^6 \times 6 \times 10^5)^2}{20} = 7{,}106 \text{ ohms}$$

The resonant impedance curves for the parallel circuit (fig. 40②), have the same shape as the current curves of a series circuit. Note that the impedance across the terminals of a parallel circuit is maximum at resonance whereas it is minimum for the series circuit. As in the series circuit, the resonance curves are sharper when the resistances are smaller.

(6) The parallel resonant circuit (the combination of L and C in conjunction with the R of the inductance) of ten is called a *tank circuit* because it acts like a storage tank when used in some vacuum-tube circuits. In figure 40① note the two meters, M_1 and M_2, for indicating the two currents which must be considered in the parallel circuit. The line current is read by M_1 and the circulating current which flows within the parallel portion of the L–C circuit is read by M_2. Since the inductive and capacitive reactances are equal at resonance, the currents through the two also are equal and are opposite in phase. They cancel each other in the external line circuit and therefore M_1 indicates a very low value of current. The small current which flows in the line results from the fact that the resistance of the inductor causes the phase angle to be slightly less than 90° in this branch so that complete cancellation cannot take

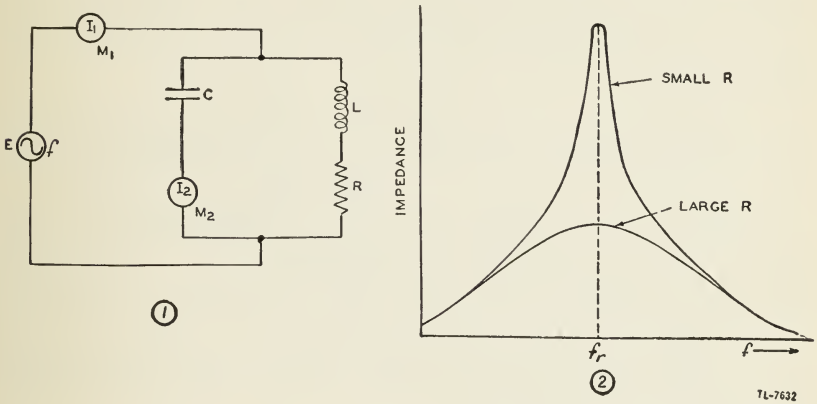

Figure 40. Parallel resonant circuit and its impedance curve.

place. The circulating current shown on M_2 is quite large depending upon the applied voltage and the impedance of the capacitor C at the resonant frequency. In a parallel resonant circuit, therefore, the impedance is maximum across the L–C circuit while the main-line current is minimum.

d. Impedance matching. (1) To obtain the greatest transfer of energy from one circuit to another the impedances of the two circuits must be matched. The simplest and most common circuit for impedance matching is the transformer. It was shown in paragraph 12 that in an iron-core transformer the secondary voltage is $E_s = E_P \frac{N_s}{N_P}$ and the secondary current is $I_s = I_P \frac{N_P}{N_s}$. The impedance at the primary of a transformer is equal to $\frac{E_p}{I_p}$ and the impedance at the secondary is $\frac{E_s}{I_s}$. However, the secondary impedance can be found in terms of the primary current and voltage by substituting the expressions given above.

$$Z_s = \frac{E_s}{I_s} = \frac{E_p \frac{N_s}{N_p}}{I_p \frac{N_p}{N_s}} = \frac{E_p}{I_p}\left(\frac{N_s}{N_p}\right)^2$$

Since $Z_p = \frac{E_p}{I_p}$, the impedance relationships in a transformer are

$$\frac{Z_s}{Z_p} = \frac{N_s^2}{N_p^2} \text{ or } \frac{N_s}{N_p} = \sqrt{\frac{Z_s}{Z_p}}$$

Thus, in a transformer which has nearly unity coupling, the *impedance ratio* is equal approximately to the *square of the turns ratio.*

Example: What turns ratio is required to match a 10,000-ohm plate load to a 10-ohm loudspeaker circuit?

$$\text{Turns ratio} = \frac{N_p}{N_s} = \sqrt{\frac{Z_p}{Z_s}} = \sqrt{\frac{10{,}000}{10}} = \sqrt{1{,}000} = 31.6$$

This does not mean that the primary must have only 31.6 turns of wire and the secondary only 1 turn. It means that if, for example, there are 100 turns on the secondary winding there must be 3,160 turns on the primary winding.

(2) The use of an air-core transformer to couple r-f energy out of a tank circuit is illustrated in figure 41. The match of impedance is controlled by varying the coefficient of coupling between coils L_1 and L_2.

(3) When coil L_2 is coupled to L_1, L_1 is affected in exactly the same manner as though a resistance had been added in series with it. This apparent resistance thus coupled into the tank circuit can be considered as being reflected from the load circuit to the tank circuit. Increasing the coupling between L_1 and L_2 by bringing the coils closer together increases the *reflected* resistance and thus decreases the circuit Q. Decreasing the coupling between L_1 and L_2 decreases the reflected resistance and thus increases the circuit Q.

(4) When the coupling is small (fig. 41①), the circuit is said to be *loosely coupled.* Under these conditions the reflected resistance, indicated by the dotted resistance (fig. 41①), is small, the resonance curve is sharp (fig. 41④), and the circuit Q is high.

(5) When the coupling is increased to a value somewhat beyond that of the loose coupling, the circuit is said to have medium coupling (fig. 41②). Under these conditions the reflected resistance is larger than those with loose coupling, as indicated by a dotted resistance of more ohms. The resonant curve also is broader (fig. 41⑤), and the circuit Q is lower.

(6) When the coupling is very close the circuit is said to have tight coupling (fig. 41③). Then the reflected resistance is large as indicated by the dotted resistance of more ohms, the resonant curve is very broad (fig. 41⑥), and the circuit Q is low.

(7) It is important that both the resistive and reactive components of a load be matched to the source impedance at high frequencies or where very long circuits are involved. If a mismatch occurs, not only is energy lost, but reflections occur from the mismatch which distort the signal.

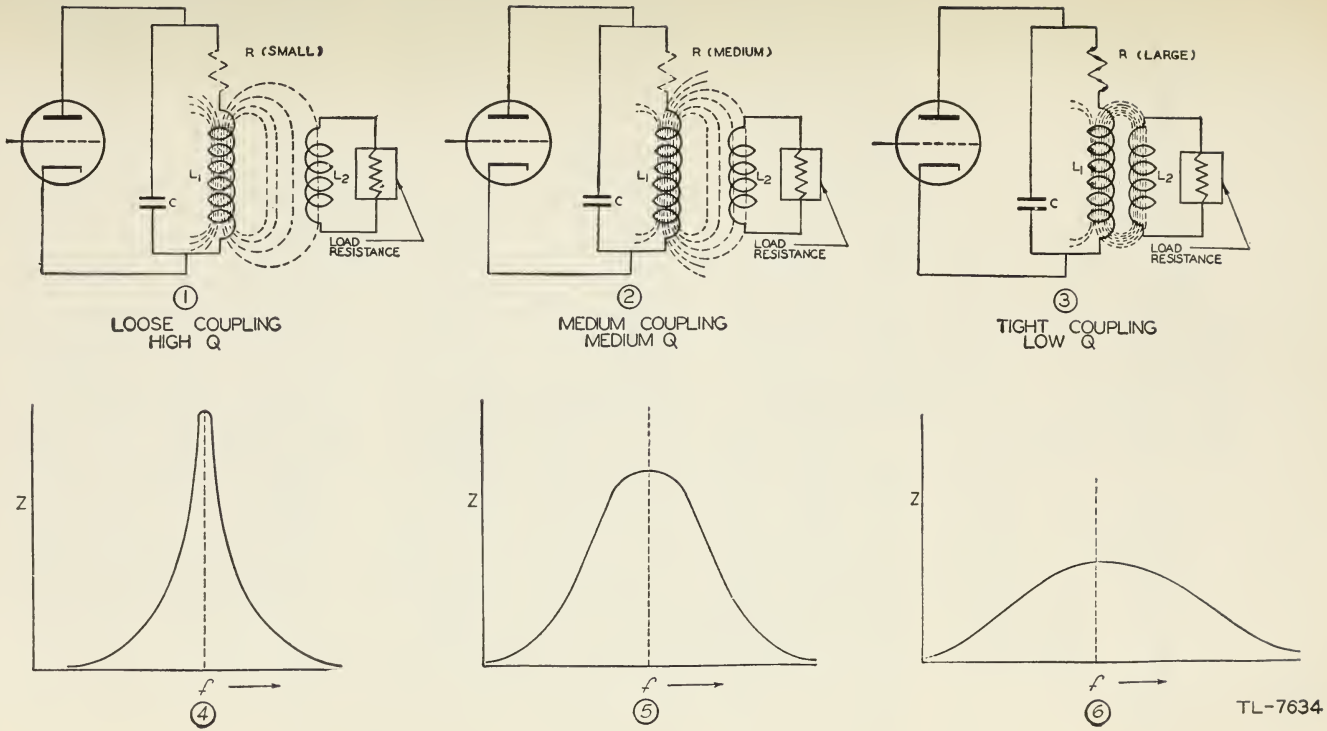

Figure 41. Effect of coupling on impedance.

SECTION III

NONSINUSOIDAL WAVES AND TRANSIENTS

---

15. NONSINUSOIDAL WAVES. a. General. Pure sine waves, which have been discussed previously, are basic waveshapes. In radar, however, waves of many different and complex shapes are used, particularly square, sawtooth, and peaked waves. The composition of these differently shaped waves must be studied so that the treatment of them in various circuits can be understood.

b. Composition. (1) Any periodic wave (one that repeats itself in definite time intervals) is composed of sine waves of different frequencies and amplitudes, added together. The sine wave which has the same frequency as the complex periodic wave is called the fundamental. The fundamental corresponds to the first harmonic.

(2) The frequencies higher than the fundamental are called harmonics. The harmonics are always a whole number of times higher than the fundamental, and are designated by this number. For example, the frequency twice as high as the fundamental is known as the second harmonic.

c. Square wave. (1) Figure 42① compares a square wave with a sine wave A of the same frequency. They are considerably different. If another sine wave B of smaller amplitude, but three times the frequency, called the third harmonic, is added to *A*, the resultant more nearly approaches the square wave. The resultant is curve *C* and is brought down as the curve *C* in figure 42②. When the fifth harmonic is added, the sides of the new resultant are steeper than before. The new resultant is the line *E* in figure 42② and is carried down to figure 42③. Addition of the seventh harmonic, of even smaller amplitude, makes the sides of the composite curve even steeper.

(2) While the top of the curve still has a few waves, it is much nearer the steady value of the square wave than the fundamental sine

wave was. Addition of more and more odd harmonics brings the resulting wave nearer and nearer to the square wave. The resulting wave becomes an exact square wave if an infinite number of odd harmonics is added.

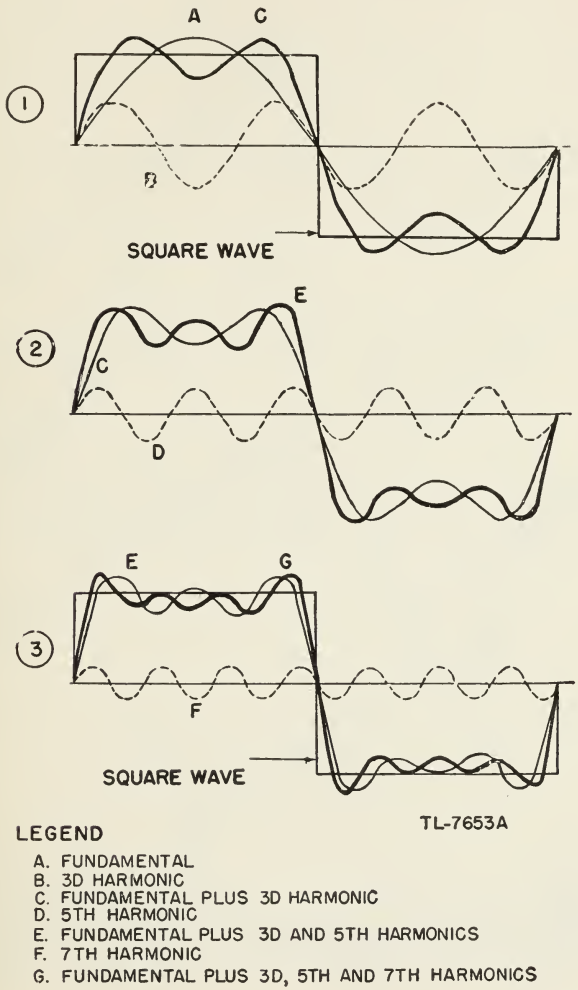

Figure 42. Composition of a square wave.

d. Sawtooth wave. Similarly, a sawtooth wave is made up of different sine waves (fig. 43). First a second harmonic of smaller amplitude is added to the fundamental. The resultant is shown as curve *C* in figure 43① and is moved down to figure 43②. It is seen that the crest of the resultant is already pushed to one side. Next the third harmonic added.

The resultant is the curve E in figure 43② and in figure 43③. The peaks are pushed farther to the side. This process is carried on through the other sections of figure 43, adding the fourth, fifth, sixth, and seventh harmonics in turn. As each harmonic is added, the resultant more nearly resembles the sawtooth wave.

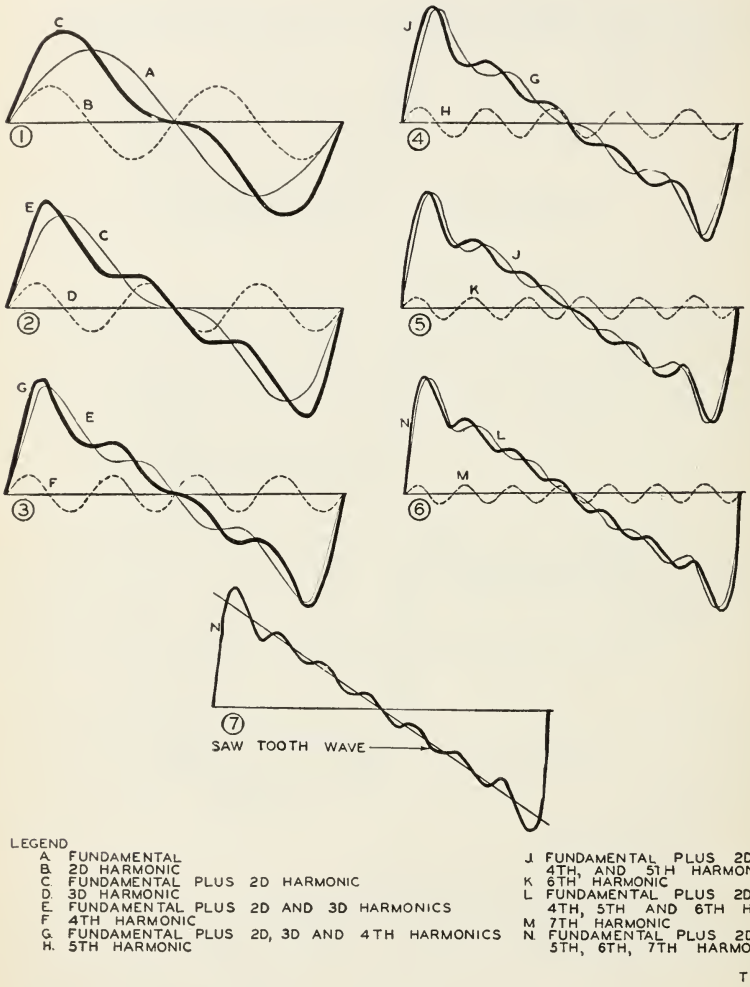

Figure 43. Composition of a sawtooth wave.

e. Peaked wave. Figure 44 shows the trend in the composition of a peaked wave. Notice how the addition of each successive harmonic makes the peak of the resultant higher and the sides steeper.

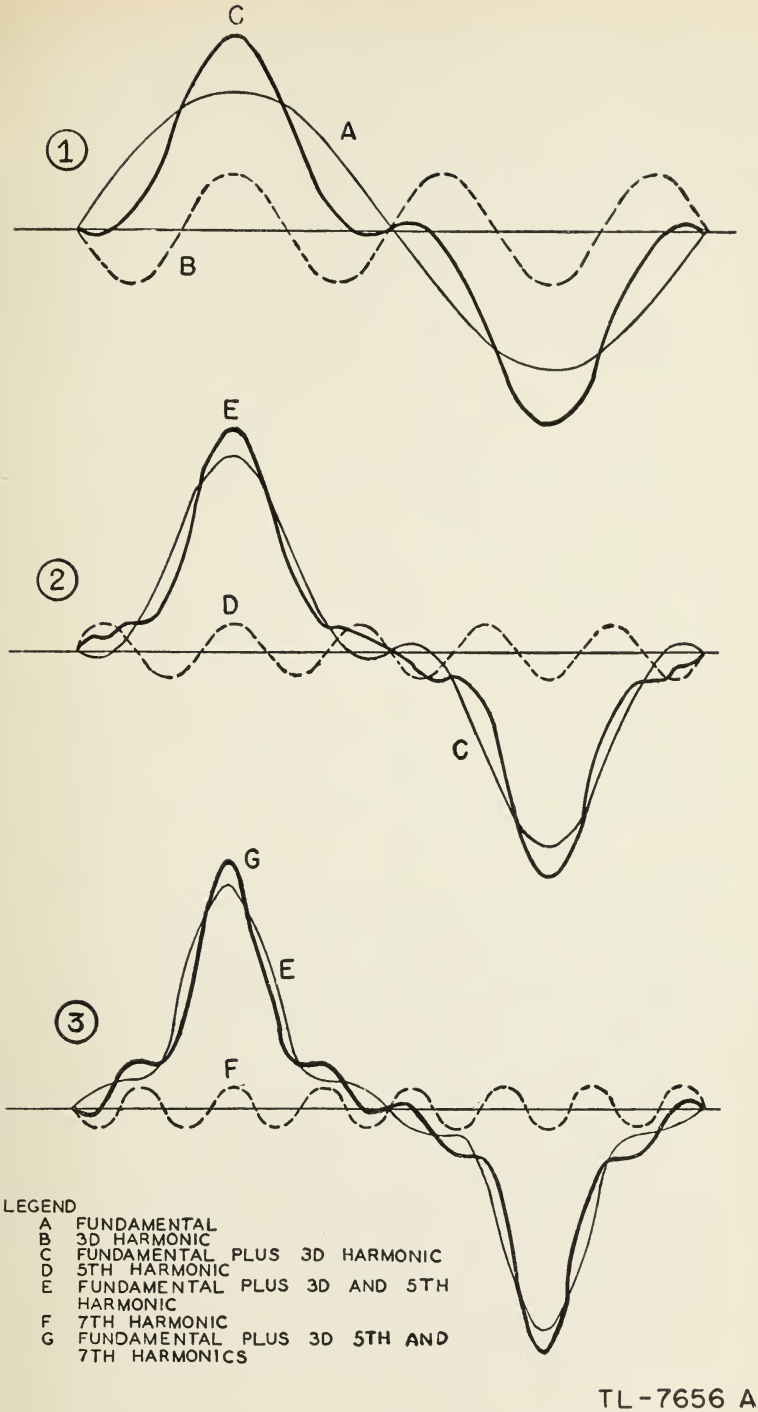

Figure 44. Composition of a peaked wave.

f. Other wave shapes. (1) The three preceding examples show how a complex periodic wave is composed of a fundamental and different harmonics. The shape of the resulting wave depends on the harmonics that are present, their relative amplitudes, and relative phase relationship. In general, the steeper the sides of the waveshape, that is, the more rapid its rise or fall, the more harmonics it contains.

(2) In addition to the waves discussed previously, in which the cycles are divided into two equal alternations, waves that do not have definite equal alternations are encountered in radar work. Examples of some of these waves are shown in figure 45. Here again, the waves are made up of a fundamental and numerous harmonics of different amplitudes. The general principles outlined previously indicate that the wave shown in figure 45③ does not have as many harmonics as the wave shown in figure 45①.

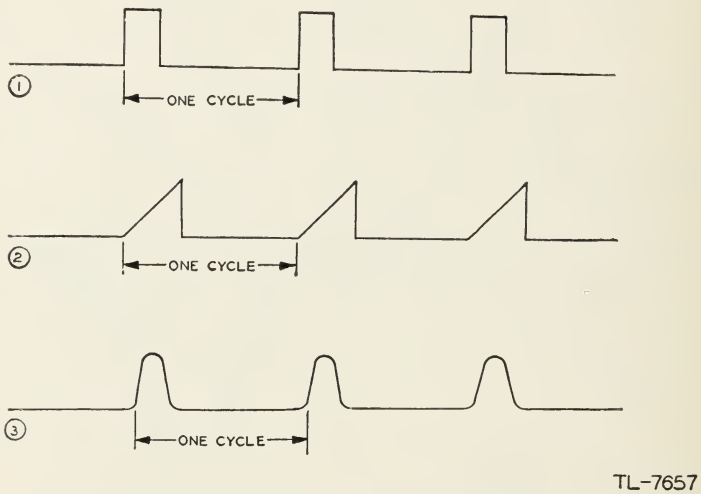

Figure 45. Waves with unequal alternations.

16. CIRCUIT REQUIREMENTS OF NONSINUSOIDAL WAVES. a. Frequency response. Since any nonsinusoidal waveshape can be built up of many sine waves of various frequencies and amplitudes, it is apparent that, if a circuit is to pass a nonsinusoidal wave without changing its shape, it must pass all the component frequencies without shifting their relative phases and without changing any of their amplitudes. Such a circuit is said to have no phase distortion and to be "flat" or have a uniform frequency response between the frequencies it is required to pass without distortion. Since a perpendicular wave front such as occurs with a perfect square wave is composed of a fundamental and an infinite number of harmonics, it is impossible to pass such a wave through a circuit consisting of practical circuit elements.

b. Passing a square wave. Even though it is impossible to design a circuit that will pass a perfect square wave without distortion, it is possible to design a circuit that has very little phase distortion and a flat frequency response from a few cycles to several megacycles. Such a circuit will pass a square wave with a very small amount of distortion (fig. 46). The leading and trailing edges of the wave are sloped and rounded

so that there is a time of rise and fall. This rise and fall time can be made very small in a properly designed circuit.

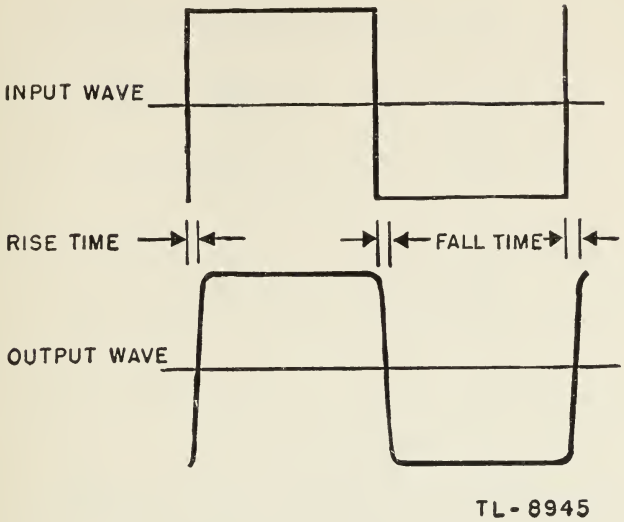

Figure 46. Distortion of a square wave.

c. Distortion circuits. In radar applications circuits are sometimes required to pass various waveshapes with a minimum of distortion. On the other hand circuits are sometimes required to effect great distortion in passing a waveform. The behavior of these distortion circuits can best be considered in the light of transient phenomena.

17. R-C TRANSIENTS. a. Resistance. Ohm's law for alternating or direct current states that the voltage across a resistance equals the current through it times the value of the resistance. This means that a voltage will be developed across a resistance *only when current flows* through it.

b. Capacitance. A capacitor is capable of storing or holding a charge of electrons. When uncharged, both plates contain the same number of free electrons. When charged, one plate contains more free electrons than the other. The difference in the number of electrons is a measure of the charge on the capacitor. The accumulation of this charge builds up a voltage across the terminals of the capacitor, and the charge continues to increase until this voltage equals the applied voltage. The charge in a capacitor is computed by the formula $Q = CE$. In this formula Q is the charge in coulombs (1 coulomb is the quantity of electricity transferred if 1 ampere flows for 1 second), C is the capacity in farads, and E is the voltage in volts. Thus, the greater the voltage, the greater the charge on a capacitor. Unless a discharge path is provided, a perfect capacitor keeps its charge indefinitely, even if the source of voltage has been removed. Any practical capacitor, however, has some leakage through the dielectric so that the charge will gradually leak off.

c. R-C charging. (1) A voltage divider may be constructed as shown in figure 47. Kirchoff's and Ohm's Laws hold for such a divider. This

circuit is commonly known as an R-C circuit and its behavior is discussed below.

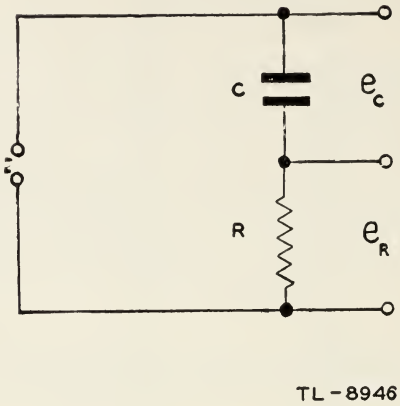

Figure 47. R-C circuit.

(2) In figure 48① an R-C circuit is shown connected to a d-c voltage source and two switches. If $S1$ is closed, electrons are attracted from the upper plate of the capacitor. This flow of electrons is the current i_c which charges capacitor C. At the instant current begins to flow, there is no voltage on the capacitor; therefore the voltage E across the divider must appear as the voltage drop across the resistor. The initial current, then, must be equal to E/R. Figure 48② shows that at the instant the switch is closed, the entire input voltage, E, appears across R and that the voltage across C is zero.

(3) The current flowing in the circuit soon charges the capacitor a small amount. Since the voltage on the capacitor is proportional to the charge on it, a small voltage e_c, will appear across the capacitor. This small voltage is opposite in polarity to, and will subtract from the battery voltage. As a result, the voltage across the resistor is $E-e_c$ which must equal the drop i_cR across the resistor. Since R is fixed, i_c must decrease and the capacitor will charge more slowly.

(4) The charging process continues until the capacitor is fully charged and the voltage across it is the battery voltage. At that time, the voltage across R must be zero and no current will flow. Figure 48② shows the division of the battery voltage between the resistance and capacitance of the divider at all times during the charging process. Theoretically, the capacitor is never fully charged, and some voltage will always appear across the resistor. However, if $S1$ is closed a long enough time, the steady state condition is reached for all practical purposes.

d. R-C discharging. In figure 48① if C is fully charged and $S1$ is opened, the condenser voltage e_c will be maintained at the battery voltage if C is a perfect capacitor. If $S2$ is then closed, a discharge current i_d will flow and start to discharge the capacitor. Since i_d is opposite in direction to i_c, the voltage developed across the resistor will be opposite in polarity to the charging voltage, but it will have the same magnitude and vary the same way. Since the voltage across the capacitor and the voltage drop of the resistor must add to equal zero during the dis-

charge, the capacitor voltage is as shown in figure 48③ dropping off from its initial value rapidly and then slowly approaching zero.

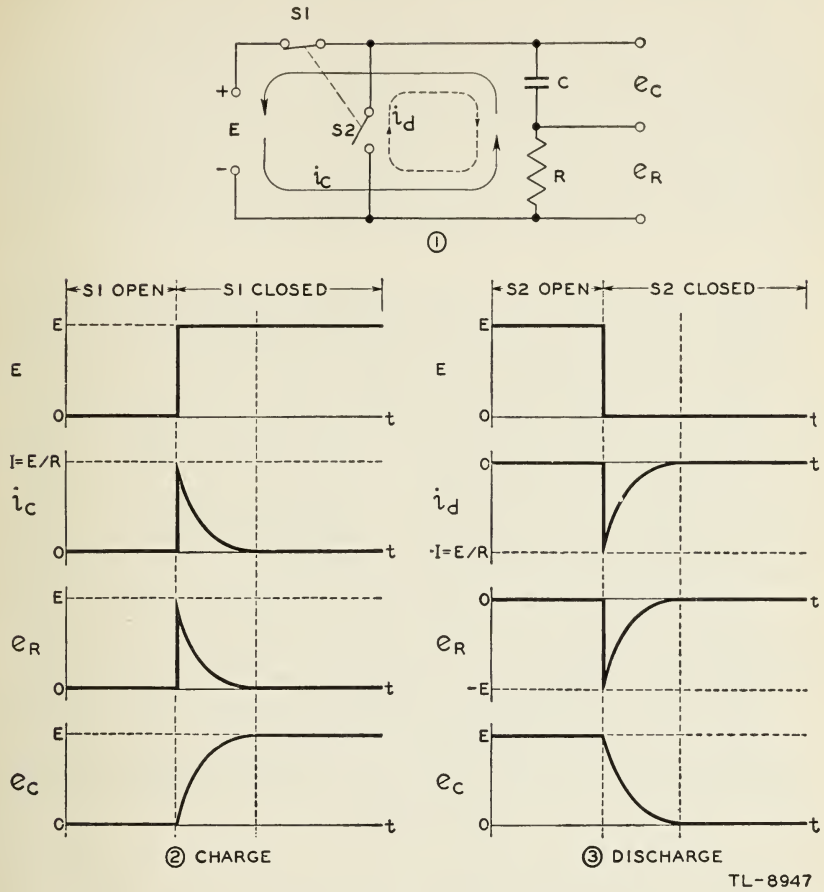

Figure 48. Charge and discharge of an R-C circuit.

e. R-C time constant. (1) The time required to charge a capacitor to 63 percent or to discharge it to 37 percent of its final voltage is known as the time constant of the circuit. The value of the time constant in seconds is equal to the product of the circuit resistance in ohms and capacity in farads. R-C is the symbol for this time constant. The time constant may also be defined as the time required to charge or discharge a capacitor completely *if* it continues to charge or discharge at its initial rate.

(2) Some useful relations often used in calculating time constants are as follows:

R (in ohms) $\times$ C (in farads) $=$ t (in seconds).

R (in megohms) $\times$ C (in microfarads) $=$ t (in seconds).

R (in ohms) $\times$ C (in microfarads) $=$ t (in microseconds).

R (in megohms) $\times$ C (in micromicrofarads) $=$ t (in microseconds)

f. Universal time constant chart. (1) Since the impressed voltage and values of R and C usually will be known, a universal time constant chart can be used (fig. 49). This is an accurate graph of the voltage rise or fall across the capacitor and across the resistor in a series R-C circuit. The time scale is graduated in terms of the R-C product so that the curves may be used for any values of R and C. The voltage scale is graduated in terms of percent of full voltages so that the curves may be used for any voltage. If the time constant and the initial or final voltage for the circuit in question are known, the voltages across various parts of the circuit can be obtained from the curves for any time after the switch is closed, either on charge or discharge.

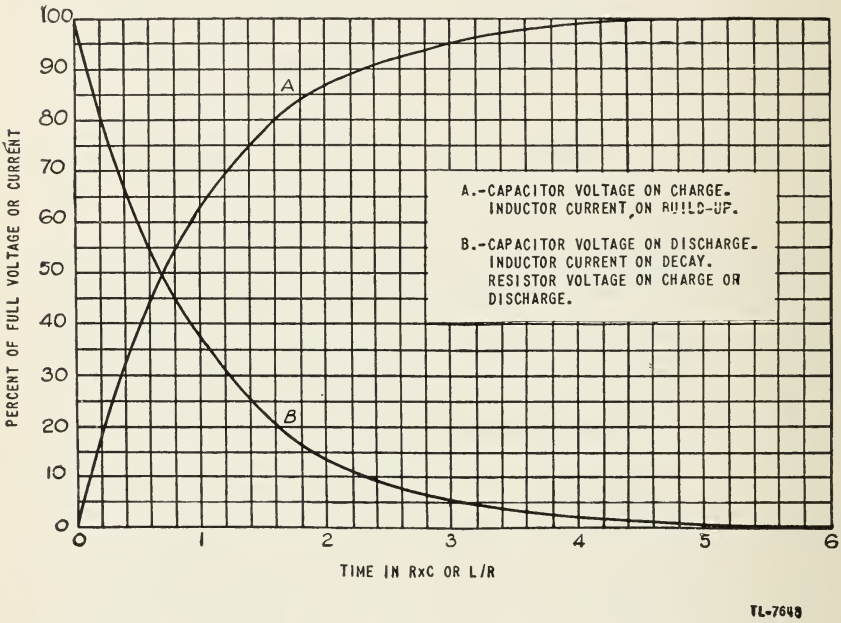

Figure 49. Universal time constant chart for R-C and R-L circuits.

(2) An illustrative problem follows to show how these curves may be used.

Example: A circuit is to be made in which a capacitor must charge to one-fifth of the charging voltage in 100 microseconds. From other considerations, the resistor should be 20,000 ohms. What size of capacitor is needed? Curve A is first consulted to determine the part of an RC (time) necessary to give one-fifth or 20 percent of full voltage. Time necessary $= 0.22\ RC$. If $0.22\ RC$ must equal 100 microseconds, one complete RC must equal $100/0.22 = 455$ microseconds.

$$C \times R = 455 \times 10^{-6} \text{ seconds}$$

$$C = \frac{455 \times 10^{-6}}{R} = \frac{455 \times 10^{-6}}{20{,}000} = 0.023 \times 10^{-6} \text{ farads}$$

$$= 0.023 \text{ microfarads}$$

In an actual circuit, a 0.02-microfarad capacitor would be used unless great precision was absolutely necessary.

(3) It is seen from these curves that in RC seconds the charge reaches 63 percent of full value. Also in 2.3 RC seconds 90 percent of the full change in voltage is reached. In the next 2.3 RC seconds, or in a total of 4.6 RC seconds, 90 percent of the remaining 10 percent change or 99 percent of the total change is reached. A third 2.3 RC second interval later, or after a total of 6.9 RC seconds, 99.9 percent of the change has occurred. Theoretically, the capacitor never reaches full charge, but after 5 RC seconds more than 99 percent of change in voltage has occurred, and for most practical purposes this is sufficiently close to full change to be considered as such.

18. R-L TRANSIENTS. a. Inductance. (1) If a battery is connected across a pure inductance, the current builds up to its final value at a rate which is determined by the battery voltage and the internal resistance of the battery. The current build-up is gradual because of the counter emf generated by the self-inductance of the coil (sec. II). When the current starts to flow, the magnetic lines of force move out, cut the turns of wire on the inductor and build up a counter emf which opposes that of the battery. This opposition causes a delay in the time it takes the current to build up to a steady value. When the battery is disconnected, the lines of force collapse, again cutting the turns of the inductor and building up an emf which tends to prolong the current flow.

(2) A voltage divider containing inductance and resistance may be connected in a circuit with a special switch as shown in figure 50①. The R-L voltage divider is known as an R-L circuit.

b. R-L charging. (1) If switch S is closed at X, a voltage appears across the divider. A current attempts to flow, but the inductor opposes this current by building up a back emf, that, at the initial instant, exactly equals the input voltage E. Since no current can flow under this condition, there is no voltage across the resistor ($e_R = IR$). Figure 50② shows all the voltage impressed across L and no voltage across R at the instant the switch is closed at X.

(2) As current starts to flow, a voltage, e_R, appears across R and e_L reduces by the same amount. Reduced voltage across the inductor means a less rapid increase in i_C and the resistor voltage increases less rapidly. Figure 50② shows that e_L finally becomes zero when the current stops increasing while e_R builds up gradually to the input voltage as the charging current rises. Under steady state conditions, only the resistor limits the size of the current.

c. R-L discharging. If switch S is closed at Y, the voltage across the resistor will try to decrease to zero, but the inductor will resist any change of current through it and attempt to maintain the flow. Since no voltage is impressed across the voltage divider and at the initial instant a voltage E is maintained across the resistor because of the action of the inductor, a negative voltage equal to $-E$ must appear across L (fig. 50③). As the discharge current, i_d, begins to decrease, the voltage across the resistor decreases proportionately. Since $e_R + e_L = 0$ at all times, the magnitude of e_L will also decrease. This change con-

tinues as shown in figure 50③ until the voltages e_R and e_L are both zero and no current is flowing.

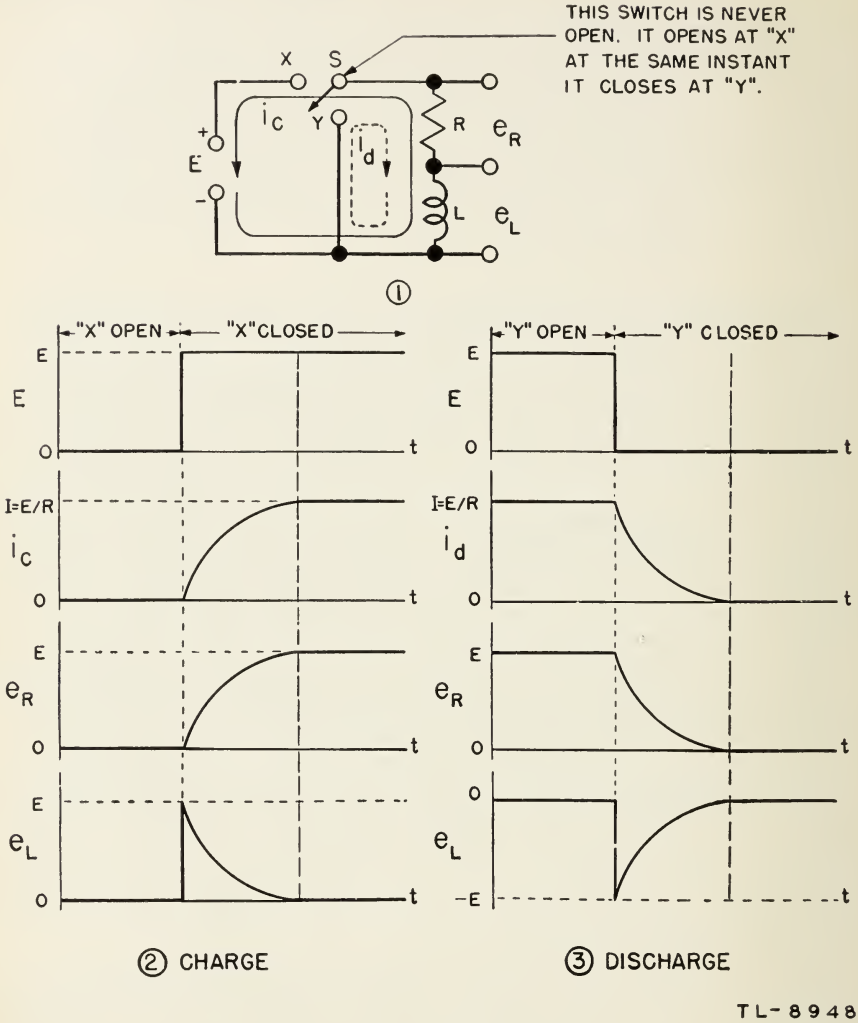

Figure 50. Charge and discharge of R-L circuit.

d. R-L time constant. (1) The significance of the time constant of an R-L circuit is the same as that of an R-C circuit. It is defined as the time required for the current through an inductor to increase to 63 percent of the maximum current or to decrease to 37 percent of the minimum. The formula is $L/R = t$ and the following expressions are often used:

$$\frac{L \text{ (in henrys)}}{R \text{ (in ohms)}} = t \text{ (in seconds)}$$

$$\frac{L \text{ (in microhenrys)}}{R \text{ (in ohms)}} = t \text{ (in microseconds)}$$

(2) The shapes of the curves for current and voltage in the R-L circuit are exactly the same as in the R-C circuit; therefore the universal

time constant chart (fig. 49) can be used. Care must be taken in choosing the proper curve for the condition being considered, since the voltage rise across a capacitor corresponds to the current rise across an inductor.

(3) For example, in a series R-L circuit, $R = 50{,}000$ ohms and $L = 150$ millihenrys. If the impressed voltage is 50 volts, at what time after the voltage is applied will the current be 0.8 milliamperes (ma)? From Ohm's law, the steady state currents $I = \frac{E}{R} = \frac{50}{50{,}000} = \frac{1}{1{,}000}$ amperes = 1 milliampere. The desired current, then, is $\frac{0.8 \text{ ma}}{1\text{ma}} = 80$ percent of the steady state value. Then, from curve A in figure 9, it is found that the current in an inductor on build-up reaches 80 percent value in 1.6 L/R seconds. The time constant in this case is:

$$t = \frac{L \text{ (henrys)}}{R \text{ (ohms)}} = \frac{150 \times 10^{-3}}{50 \times 10^{3}} = 3 \times 10^{-6} \text{ seconds} = 3 \text{ microseconds}$$

Since the time needed to reach 80 percent value is 1.6 L/R seconds, the current will reach 0.8 milliampere in

$$1.6 \times 3 = 4.8 \text{ microseconds}$$

19. A-C TRANSIENT CIRCUITS. a. General. The transient effects of d-c circuits have been considered up to this point. If an a-c voltage is substituted for the d-c input voltage in the circuits already discussed the same principles may be applied in the analysis of the transient behavior.

b. Relative time. When considering alternating current and voltage waves, care must be taken to qualify the use of such terms as "long" and "short" time constants. These terms are purely relative with respect to the period of the waveshape involved. At 60 cycles a cycle is 166,000 microseconds long and a time constant of 100 microseconds may be considered "short." At one megacycle, however, where a cycle is 1 microsecond long, the same time constant would be very long indeed. In this discussion a long time constant will be considered to be 10 times as long or longer than the period of the waveshape. Time constants will be considered short if one-tenth as long as or less than the period of the input waveshape. Intermediate values will be specifically designated with respect to the period of the input signal.

c. Coupling circuits. An R-C coupling circuit is designed to have a long time constant with respect to the period of the lowest frequency it must pass. Such a circuit is shown in figure 51. If a nonsinusoidal

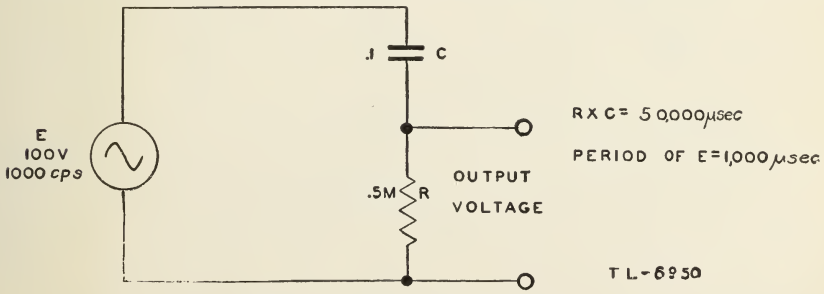

Figure 51. R-C coupling circuit.

voltage must pass unchanged through the coupling circuit, the time constant of the circuit must be long with respect to the period of the lowest frequency contained in the voltage wave.

d. R-C differentiator and integrator. An R-C voltage divider that is designed to distort the input voltage waveshape is known as a differentiator or integrator, depending on the locations of the output taps. The output from a differentiator is taken across the resistance while the output from an integrator is taken across the capacitor. Such circuits will change the shape of any complex alternating-voltage waveshape that is impressed on them and this distortion is a function of the value of the time constant of the circuit as compared to the period of the waveshape. Neither a differentiator nor an integrator can change the shape of a pure sine wave. In the following figures, both integrator and differentiator outputs are shown, but usually only one output is used in practical circuits.

e. Sine-wave input. (1) If a 1,000-cycle sine wave voltage that has a peak value of 100 volts is applied to an R-C voltage divider with an intermediate or short time constant, the sine wave will be shifted in phase. Figure 52 illustrates the case in which an intermediate R-C circuit is employed.

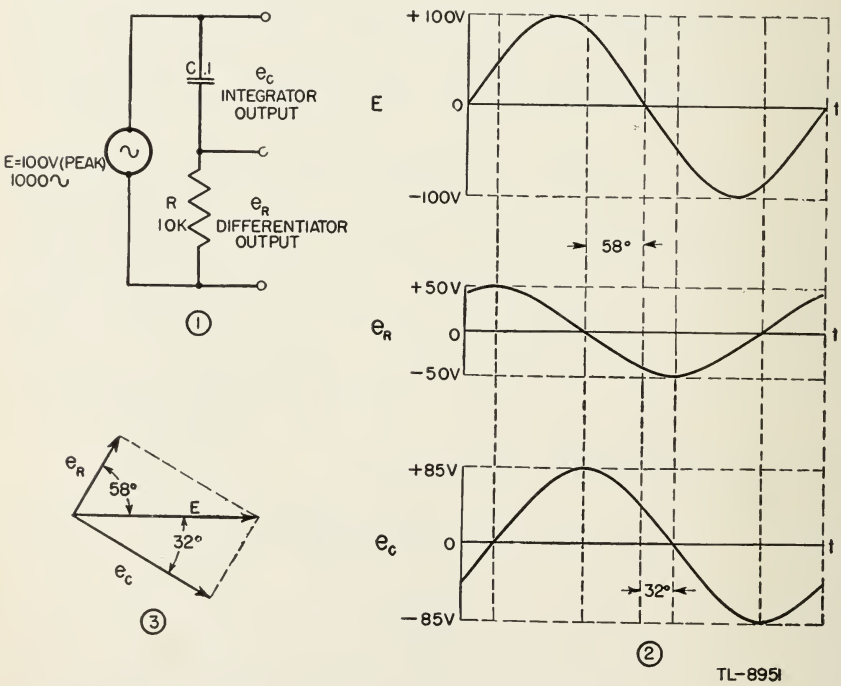

Figure 52. R-C differentiator and integrator action on a sine voltage.

(2) R is 10,000 ohms and C is 0.1 microfarad, so that the time constant of the circuit is $R \times C$ or 1,000 microseconds. The period of the 1,000-cycle voltage is $\frac{1}{1{,}000}$ second, or 1,000 microseconds. The time constant of the circuit is equal to the period of the voltage and the output will be distorted in phase and reduced in amplitude.

(3) A-c voltage divider equations apply to this circuit, and the peak voltage across the resistor is found to be 50 volts, and across the condenser 85 volts. Since these are vector quantities, they must be added vectorially to obtain the 100-volt input that Kirchoff's Laws require (fig. 52③). This means that a phase difference between the input, differentiator output, and integrator output will exist. Both outputs are sine waves as illustrated in figure 52②. In the case shown, the differentiator output e_R is a sine wave which leads the input voltage by about 58° while the integrator output e_C is a sine wave which lags the input voltage by about 32°. It may be shown, however, that the sum of the two outputs at every instant equals the instantaneous input voltage.

f. Square-wave input. (1) If the same circuit (fig. 52) has impressed on it a 1,000-cycle square-wave voltage instead of a sine wave, the outputs of figure 53② are obtained.

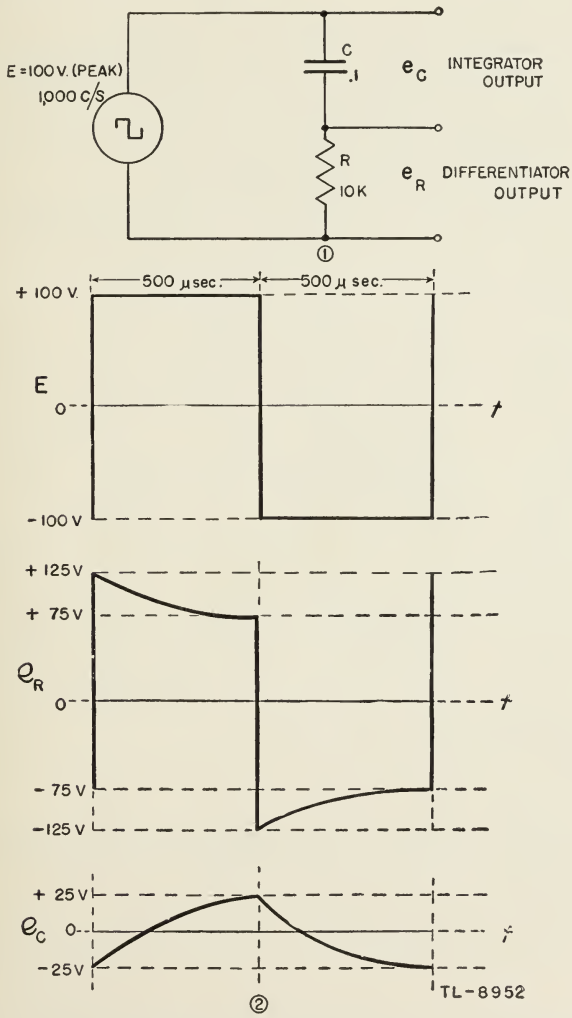

Figure 53. R-C differentiator and integrator action on a square wave.

(2) The action of the square wave on this R-C circuit is analogous to the d-c transient case discussed in paragraph 3. The square-wave voltage of 200 volts peak-to-peak is placed across the input of the circuit and the condenser alternately charges positively and negatively an amount determined by the R-C time constant. Since in this case the time constant is equal to the period of the square wave, the condenser never fully charges during either half-cycle and as a result the integrator output has a smaller amplitude than the input. Figure 53② illustrates the outputs of the voltage divider. The two outputs must add at all times to the input voltage; consequently the differentiator output must be as shown. This output has a maximum amplitude that is greater than the input amplitude since the voltage left on the capacitor from the previous half-cycle will add with the input voltage. The sum of these two voltages will appear as a voltage drop across the resistor at the instant the polarity of the input voltage changes.

(3) Figure 54 shows the effect of different values of time constant on the output of the voltage divider. Figure 54① has a time constant equal to one-tenth the period of the input wave. The capacitor has time to become fully charged during a half-cycle for all practical purposes. Such a circuit when used as a differentiator is often known as a peaker. The figure also makes apparent the fact that the peaks produced have an amplitude exactly twice the input amplitude.

(4) Figure 54② shows the effect of a time constant that is 10 times as long as the period. The differentiator output is almost the same as

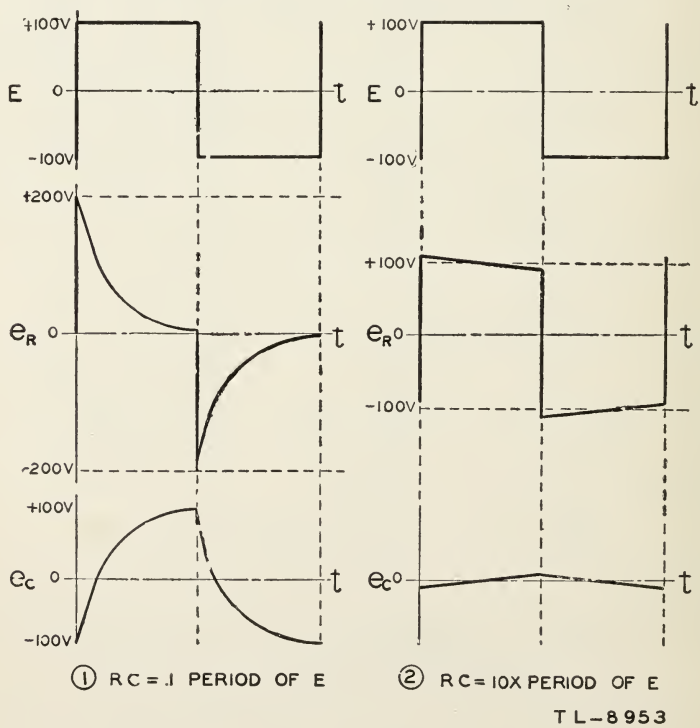

Figure 54. Effect of time constant on R-C differentiators and integrators.

the input and the integrator output has a very low amplitude. It is noticeable that the integrator output is a back-to-back sawtooth of very low amplitude. After amplification this sort of increase or decrease of voltage is a valuable part of some waveshapes used in radar.

g. Sawtooth-wave input. (1) If a back-to-back sawtooth voltage is applied to an R-C circuit with a time constant one-sixth the period of the input voltage, the result is as shown in figure 55.

(2) The capacitor voltage e_C will follow the input voltage very closely if the time constant is short. The shorter the time constant, the closer it will follow. The result is that the integrator output very closely resembles the input. The amplitude will be slightly reduced and there will be a slight phase lag.

(3) Since the voltage across the capacitor is increasing at a constant

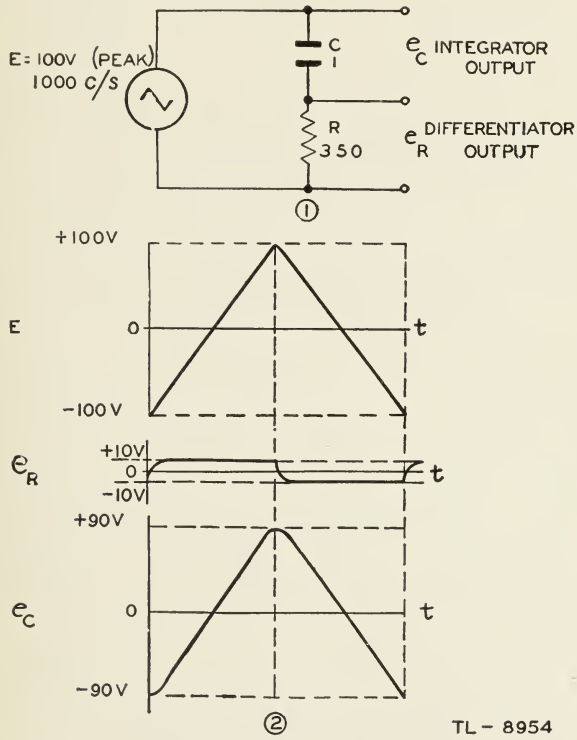

Figure 55. R-C differentiator and integrator action on a sawtooth wave.

rate, the charging and discharging current will be constant. This means the output voltage of the differentiator will be constant during each half of the sawtooth input. The resulting square wave is shown in figure 55②. It can be seen that the integrator output adds to the differentiator output at every instant to equal the instantaneous input voltage.

h. Miscellaneous inputs. (1) Various voltage waveforms other than those represented above may be applied to short R-C circuits for the purpose of producing, across the resistor, an output voltage with an

amplitude proportional to the rate of change of the input. The shorter the R-C time constant is made with respect to the period of the input wave, the more nearly the voltage across the capacitor conforms to the input. Thus the differentiator output becomes of particular importance in very short R-C circuits.

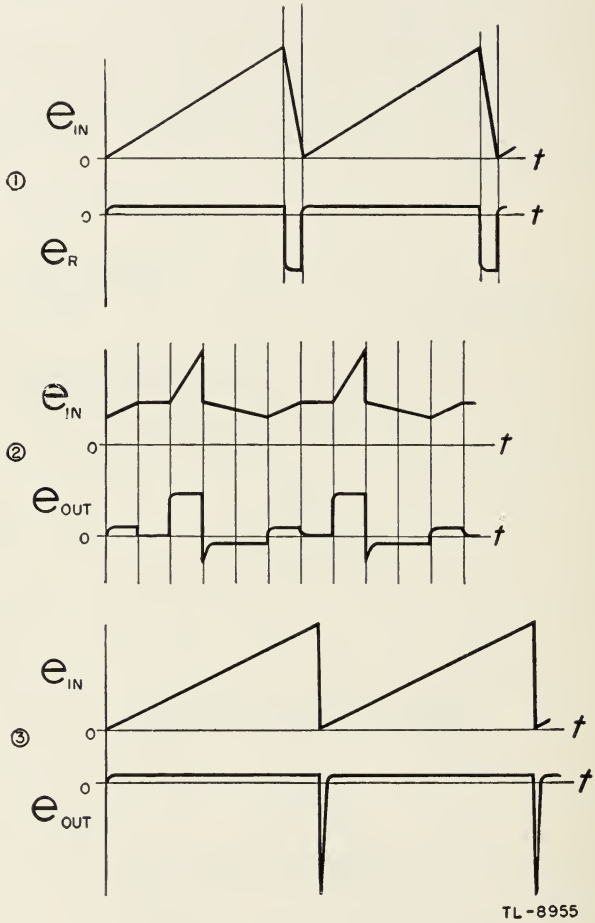

Figure 56. Differentiator outputs of short R-C circuits for various input voltage waveshapes.

(2) The differentiator outputs for various types of input waves are shown in figure 56. In ① the slope of the trailing edge of the sawtooth voltage is greater than that of the leading edge; therefore, the amplitude of the output voltage e_r is greater during this portion of the cycle. This same relationship of amplitude of the output voltage e_r and the steepness of the input voltage rise or decay is illustrated in both ② and ③.

SECTION IV

VACUUM TUBES AND APPLICATIONS

---

20. ELECTRON EMISSION. a. Thermionic emission. (1) Metallic substances are capable of conducting electricity as a result of electrons within the material which at any given time are not definitely attached to any particular molecule. These free electrons are in a state of continuous motion with a velocity that increases with temperature. At ordinary atmospheric temperatures the free electrons cannot leave the surface of the metal because of the existence of attracting forces at the surface which are much greater in magnitude than those exerted by the electrons themselves.

(2) In order for the free electrons to escape from the metallic surface, sufficient energy must be acquired to enable them to overcome the attracting surface forces. This energy may be supplied in the form of heat, in which case the resulting emission of electrons is called *thermionic emission.* The substance from which the electrons escape is called the *emitter* or the *cathode.*

(3) The process of electron emission from a solid is very similar to the evaporation of vapor from the surface of a liquid. The evaporated molecules, in the case of the vapor, represent molecules that have acquired sufficient energy as a result of the applied heat to overcome the forces at the surface of the liquid. The number of such molecules, and thus the rate of evaporation, increases rapidly as the temperature is raised. In a similar manner the rate at which electrons escape from the emitter surface increases as the temperature of the emitter is raised.

(4) Again, as in the case of the evaporation of a liquid, the rate of emission is increased as the emitting surface becomes greater and as the pressure becomes less. Thus, when sealed in an evacuated envelope, or tube, the heated emitter becomes a practical source of electrons for the operation of electronic tubes.

b. Types of emitters. (1) The high temperatures required to produce satisfactory thermionic emission limit the number of substances suitable as emitters to a very few. Of these *tungsten, thoriated-tungsten,* and *oxide-coated* emitters are the only ones commonly used in vacuum tubes.

(2) Tungsten has great durability as an emitter but requires a large amount of power and a high operating temperature for satisfactory emis-

sion. Tungsten emitters are operated at temperatures from 2,200° to 2,350° C. and are used in high-power vacuum tubes where very high plate voltages are encountered.

(3) In thoriated-tungsten emitters the surface of the thoriated tungsten is coated with a layer of thorium one molecule thick. This coating results in a greater electron emission at a lower operating temperature, approximately 1,650° C., than in the case of pure tungsten. Thoriated-tungsten emitters are used in tubes operated at moderate voltages where the plate potentials range from 500 to 5,000 volts.

(4) The oxide-coated emitter consists of a metal such as nickel coated with a mixture of barium and strontium oxides over which is formed a mono-molecule layer of metallic barium and strontium. The actual emission of the electrons is from the surface layer of barium and strontium. Oxide-coated emitters have long life and great emission efficiency and are used in all heater-type tubes as well as practically all other tubes used in radio receivers. They are used satisfactorily at operating temperatures of from 800° to 900° C.

c. Heating the emitters. (1) The electron-emitting cathodes of vacuum tubes are heated electrically, either by using the emitter as a filament and passing sufficient current through it to maintain the operating temperature, or by using the emitter as a cylindrical cathode and heating it with an incandescent tungsten filament placed inside the cylinder. Tungsten, thoriated-tungsten, and oxide-coated emitters may be of the filament type, but heater-type cathodes always use oxide-coated emitters.

(2) Practically all of the power required to maintain the operating temperature of the cathode is represented by the heat radiated from the cathode.

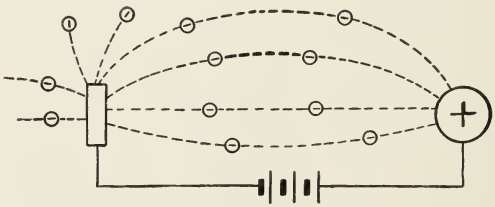

TL-2644

Figure 57. Emitted electrons attracted by positively charged body.

d. Electron motion. Any isolated, positively charged body in the vicinity of an electron emitter attracts the electrons. These electrons tend ultimately to neutralize the positive charge of the body. The positive charge can be maintained, however, if electrons are removed from the body as fast as they strike it. For example, this can be done by connecting a source of constant voltage between the positively charged body and the emitter (fig. 57). This is the general arrangement of the two-element vacuum tube, known as a *diode*. The charged body, known as the *plate,* usually surrounds the emitter. The whole assembly is enclosed in an evacuated glass or metal container, called the *envelope*.

e. Electron transit time. The time taken by an electron to pass from the cathode to the plate of a vacuum tube is known as the *transit time*.

This time represents a negligible part of the period at operating frequencies lower than 100 megacycles so that the output plate current may be assumed to respond instantaneously to changes in electrode voltages. As the operating frequency is increased above 100 megacycles, however, the time in which the electrons travel from cathode to plate may become an appreciable part of a cycle. Thus, a change in the electrode voltages may not affect the plate current instantaneously. This transit time of the electrons, which can be thought of as an inductive lag, is an important factor in the behavior of vacuum tubes at extremely high frequencies. In certain instances, the transit time can be diminished appreciably by an increase in the voltage of the positive collecting electrode. Otherwise the tube must be reduced in size to decrease the spacing between the electrodes.

21. DIODES. a. Construction. The simplest type of vacuum tube is the diode. It consists of two elements, a cathode and a plate. The method of heating the cathode may be direct or indirect without affecting the operation of the diode.

b. Operation. If a potential difference is produced between the plate terminal and the cathode terminal so that the plate is positive with respect to the cathode (fig. 58①), electrons flow from the cathode to the plate inside the tube envelope. These electrons return to the cathode via the plate-battery circuit. This flow of electrons, known as *plate current,* can be measured by a sensitive ammeter. However, if the plate is made negative with respect to the cathode (fig. 58②) no plate current flows, because the emitted electrons are repelled instead of attracted (since likecharges repel). This unidirectional characteristic of the diode permits electrons to flow from the cathode to the plate only when the plate is positive with respect to the cathode.

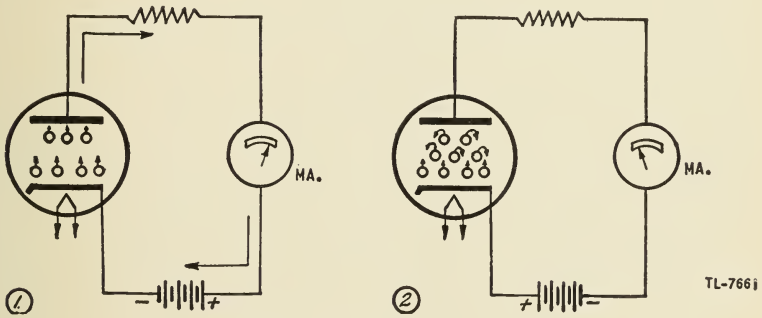

Figure 58. Action of diode.

c. Space charge. (1) The total number of electrons emitted by the cathode, at a given operating temperature, is always the same regardless of the plate voltage. The electrons in the interelectrode space constitute a negative *space charge* which tends to repel back into the cathode electrons just being emitted. At low plate voltages only those electrons nearest the plate are attracted to it, constituting a low plate current. However, as the plate voltage is increased, greater numbers of the electrons are attracted to the plate and correspondingly fewer of those being emitted are repelled back into the cathode. Eventually a high enough

plate voltage is reached at which all the electrons being emitted are in transit to the plate and none is repelled back to the cathode. Any further increase in plate voltage can cause no increase in the plate current flowing through the tube.

(2) The relation between the plate current in a diode and the plate potential for different cathode temperatures is shown in figure 59. At

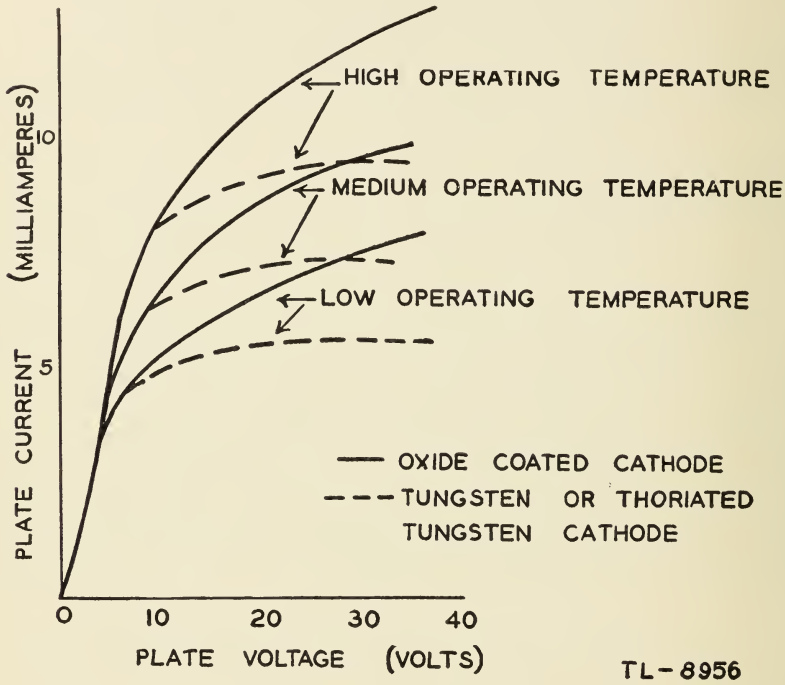

Figure 59. Diode characteristic i_p vs. e_p.

high plate voltage the flow of plate current is practically independent of the plate voltage but is a function of the cathode temperature. However, at lower values of plate voltage, the plate current is controlled by the voltage at the plate and is independent of the temperature of the filament. The portion of the characteristic curve which is dotted is representative of tungsten and thoriated-tungsten emitters and the solid characteristic is typical of oxide-coated emitters. Thus it is seen that it is unlikely that the plate current in a tube using an oxide cathode will ever become entirely independent of the plate voltage. Before the voltage at the plate is made sufficiently positive to produce *emission saturation* it is likely that the emitting element would be damaged seriously

d. Use. Since current can flow in only one direction through a diode, one of its applications in radio is as a *rectifier*. An alternating potential applied in series with the circuits of figure 58① and ② causes a current to flow through the resistance load only during alternate half-cycles. The flow takes place only when the plate is positive with respect to the emitter. This unidirectional characteristic of the diode also is used in principle when the tube is used as a *detector*.

22. TRIODES. a. Construction and operation. (1) When a third electrode, called a control grid or *grid,* is placed between the cathode and the plate, the vacuum tube is known as a triode. The grid itself does not present an obstacle to the electron flow because it is an open helix or mesh of fine wires. But a varying potential on this electrode has an important controlling effect on the plate-current output of the tube. If the grid is made sufficiently negative with respect to the cathode all electrons are repelled by it and are forced back to the cathode. No electrons reach the plate and so the plate current is zero. The smallest negative voltage between grid and cathode which causes the tube to cease to conduct is called the *cut-off bias.*

(2) If the grid is made slightly less negative with respect to the cathode some electrons get past the grid and move to the plate, producing a small plate current. Further decrease in the negative grid voltage allows further increase in plate current. So long as the grid is negative with respect to the cathode no electrons are attracted to the grid and no current can flow through the grid circuit. Hence under these conditions the grid circuit consumes no power.

(3) At zero grid potential, with respect to the cathode, no retarding influence is exerted on the electrons and the action is very similar to that of a diode. When the grid is positive an accelerating influence is exerted on the electrons and some of them are attracted to the grid causing an appreciable grid current to flow. Under these conditions power is dissipated in the grid circuit. To avoid power consumption by the grid circuit, vacuum tubes are generally operated with a grid voltage varying in a negative direction from zero with respect to the cathode. The effect of variations of grid voltage on the plate current of a vacuum-tube circuit is shown in figure 60.

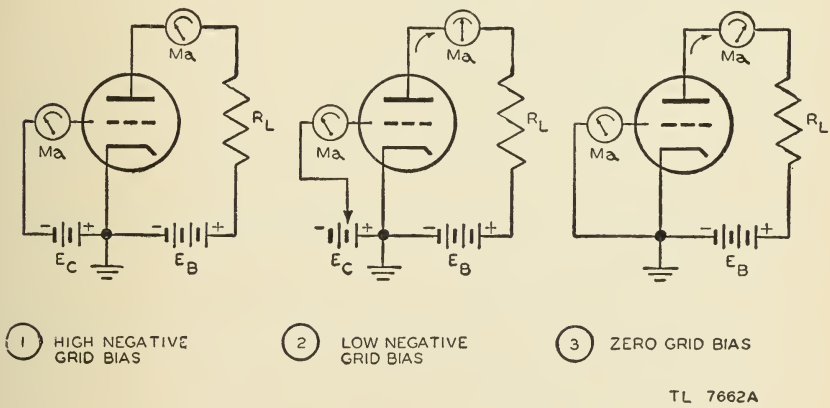

Figure 60. Effect of control grid on plate current.

b. Amplification. The grid may be considered to act as a valve to control the plate current, as the voltage variation on the grid has a much greater effect on the plate current than do changes in plate voltage. When a resistance or impedance load, R_L of figure 60, is placed in series in the plate circuit, the voltage drop across it, which is a function of the plate current flowing through it, is controlled by the grid voltage.

Thus a small change in grid voltage causes a large change in voltage across the load. In other words, the grid voltage is *amplified* in the plate circuit.

c. Tube characteristics. (1) The characteristics of vacuum tubes with cathode, grid, and plate elements involve the relationships between grid voltage, plate current, and plate voltage. The measure of the amplification of which a tube is capable is known as its *amplification factor,* designated μ, and is the ratio of plate-voltage change required for a given change in plate current to the grid-voltage change necessary to produce the same change in plate current. An e_p vs. e_g characteristic for a typical triode is shown in figure 61①. A value of plate voltage e_p, is selected and the grid voltage e_g is adjusted to operate the tube at point A on the 20-milliampere curve. The value of e_p is raised a specific amount and e_g is made more negative to hold the plate current at 20 milliamperes so that the tube operates at point B. The amplification factor is determined by the ratio of the small change in plate voltage, called Δe_p, to the small change in grid voltage, Δe_g, and becomes

$$\mu = -\frac{\Delta e_p}{\Delta e_g} \ (i_p \text{ Constant}).$$

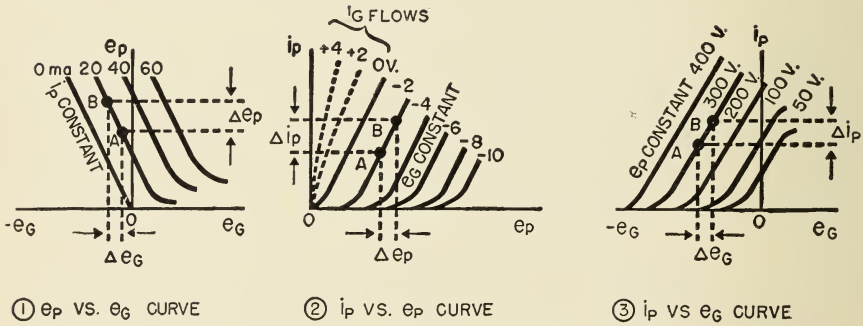

Figure 61. Typical triode characteristics.

The minus sign simply indicates that the changes in plate voltage and grid voltage are in opposite directions. Triodes have amplification factors on the order of 20.

(2) Another important characteristic is the *variational* or *a-c plate resistance,* designated by r_p. It is the ratio, for a constant grid voltage, of a small plate-voltage change to the small plate-current change it effects and is expressed in ohms. An i_p vs. e_p characteristic for a typical triode is shown in figure 61②. A grid bias of -2 volts is maintained constant and the plate voltage is raised from a value which places the operation of the tube at point A to a value which places the operation at point B. The ratio of this small change in plate voltage, designated Δe_p, to the small change in plate current, Δi_p, which it effects indicates the variational plate resistance

$$r_p = \frac{\Delta e_p}{\Delta i_p} (e_g \text{ constant})$$

where Δe_p is in volts and Δi_p is in amperes, r_p is in ohms.

(3) A third characteristic used in describing the properties of vacuum tubes is the grid-plate *transconductance,* designated by g_m, and defined as the ratio, with plate voltage held constant, of the small change of plate current to the small change in grid voltage which causes the change of plate current. The transconductance is a rough indication of the design merit of the tube and is usually in micromhos. The i_p vs. e_g characteristic for a typical triode is shown in figure 61③. The voltage at the plate is held constant at 300 volts and the grid voltage is reduced from the value which places the operation at point A to the value which places the operation at point B. The ratio of the resulting small change of plate current, Δi_p, to the small change in grid voltage, Δe_g, indicates the transconductance.

$$g_m = \frac{\Delta i_p}{\Delta e_g} \quad (e_p \text{ constant}).$$

Where i_p is in amperes and e_g is in volts, g_m must be divided by 1,000,000 to be expressed in micromhos.

(4) These tube characteristics are inter-related and depend primarily upon the tube structure. This relationship is defined by the expression

$$\mu = g_m r_p$$

where g_m is in *mhos* and r_p is in ohms.

d. Typical tube problem. (1) As an example of the application of tube characteristics the constants of the triode amplifier circuit shown in figure 62 may be considered. The plate *supply* is 300 volts and plate

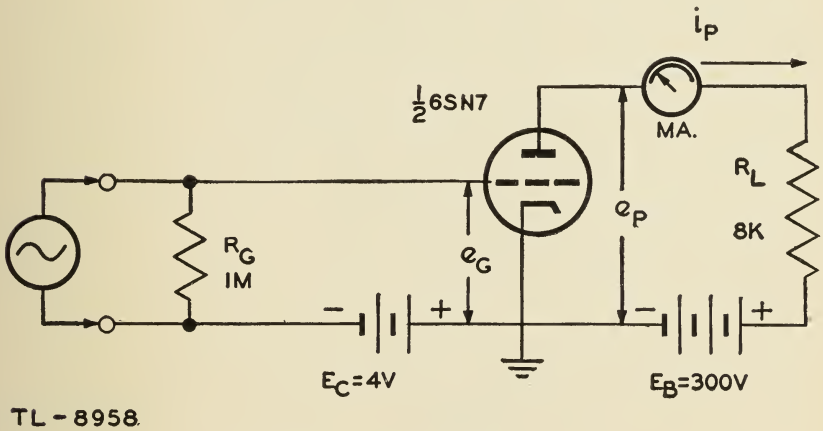

Figure 62. Triode amplifier circuit.

load is 8,000 ohms. If the tube is considered to be an open circuit no plate current flows and there is no drop across R_L; so the plate is at 300 volts. If, on the other hand, the tube is considered to be a short circuit, maximum possible plate current flows and the full 300-volt drop appears across R_L. The plate voltage is zero and the plate current is 300/8,000 = 37.5 milliamperes. These two extreme conditions define the *load line* on the i_p vs. e_p characteristic, figure 63①. The grid is returned to a steady biasing voltage of —4 volts.

(2) The steady or quiescent operation of the tube is determined by the intersection of the load line with the —4-volt curve, point Q (fig. 63①). By projection from point Q through the plate current axis it is found that the value of i_p with no signal applied to the grid is 12.75 milliamperes. By projection from point Q through the plate-voltage axis it is found that the quiescent plate voltage is 198 volts. This leaves a drop of 102 volts across R_L which is borne out by the relation $0.01275 \times 8{,}000 = 102$ volts.

(3) An alternating voltage of 4 volts maximum swing about the normal value of —4 volts is applied to the grid of the triode amplifier. This signal swings the grid in a positive direction to 0 volts and in a negative direction to —8 volts (fig. 63②), and establishes the *operating region* of the tube along the load line between points A and B. Thus the maxima and minima of the plate voltage and current are established. By projection from points A and B through the plate-current axis the maximum plate current is found to be 18.25 milliamperes and the minimum is 7.5 milliamperes (fig. 63③). By projections from points A and B through the plate-voltage axis the minimum plate voltage swing is found to be 154 volts and the maximum is 240 volts (fig. 63④).

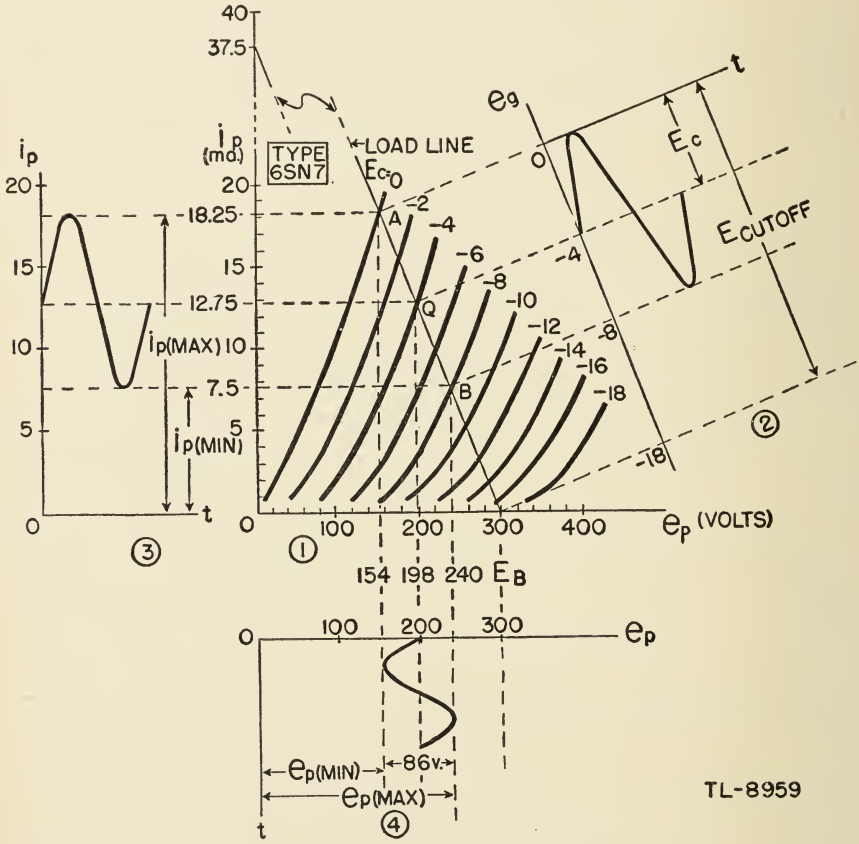

Figure 63. Application of i_p vs. e_p characteristic to a typical tube problem.

(4) By this graphical application of the i_p vs. e_p characteristic of the 6SN7 triode the operation of the circuit illustrated in figure 62 becomes apparent. A voltage variation of 8 volts (peak-to-peak) on the grid produces a variation of 84 volts at the plate.

e. Polarity inversion. (1) When the signal voltage applied to the grid has its maximum positive instantaneous value the plate current is also maximum (fig. 63②, and ③). By referring to figure 62 it is seen that this maximum plate current flows through the plate load R_L producing a maximum i_R drop across it. The lower end of R_L is connected to the positive terminal of E_B and is, therefore, held at a constant value of 300 volts. With maximum i_R drop across the load, the upper end of R_L is at a minimum instantaneous voltage. The plate of the tube is connected to this end of R_L and is at the same minimum instantaneous potential.

(2) This polarity reversal between grid and plate voltages is further clarified by a consideration of Kirchoff's law as it applies to series resistance. The sum of the I_R drops around the plate circuit must at all times equal the supply voltage E_B. Thus when the instantaneous voltage drop across R_L is maximum the voltage drop across the tube, e_p, is minimum and their sum is 300 volts. The variations of grid voltage, plate current, and plate voltage about their steady state values is illustrated in figure 64.

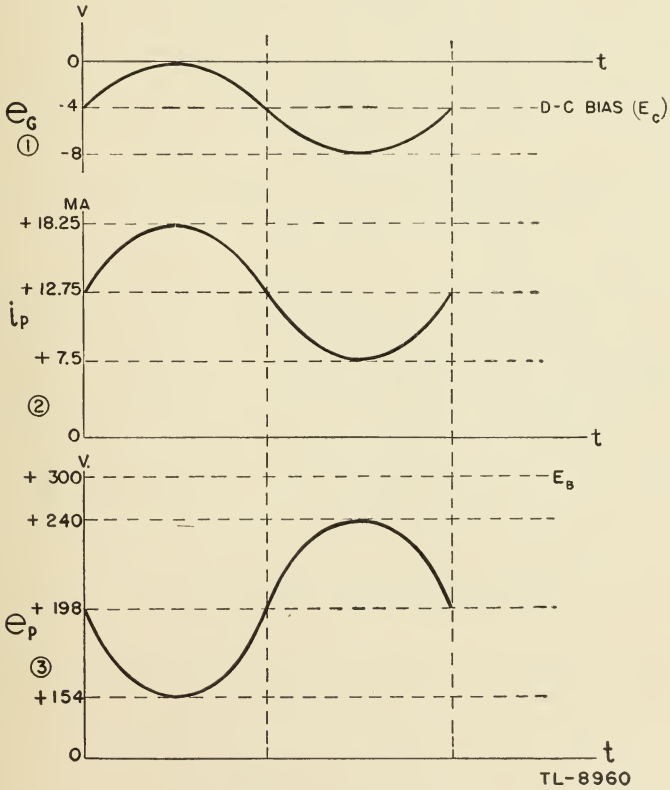

Figure 64. Polarity reversal between grid and plate voltages.

f. Biasing methods. (1) The difference of potential between *grid and cathode* is called the *grid bias* of a vacuum tube. There are three general methods of providing this bias voltage. In each of these methods the purpose is to establish the grid at a potential with respect to the cathode which will place the tube in the desired operating condition as determined by its characteristics.

(2) Grid bias may be obtained from a source of voltage especially provided for the purpose, as a battery or other d-c power supply. This method is illustrated in figure 65①, and is known as *fixed bias.*

(3) A second biasing method is illustrated in ② which utilizes a cathode resistor across which an iR drop is developed as a result of plate current flow through it. The cathode of the tube is held at a positive potential with respect to ground by the $i_p\ R_k$ drop which effectively places the grid negative with respect to the cathode by the amount of the $i_p\ R_k$ drop because the grid is at ground potential. Since the biasing voltage depends upon the flow of plate current the tube cannot be held in a cut-off condition by means of the *cathode* bias voltage developed across R_k. The value of the cathode resistor is determined by the bias required and the plate current which flows at the value of bias, as found from the tube characteristic curves. The capacitor C_k is shunted across R_k to provide a low-impedance path to ground for the a-c component of the plate current which results from an a-c input signal on the grid. If C_k is sufficiently large to offer negligible reactance for the lowest frequency signal placed on the grid, then only the d-c component of the plate current flows through R_k and the d-c bias voltage remains constant.

(4) The third method of providing a biasing voltage is illustrated in figure 65③, and is called *grid-leak bias.* During the portion of the in-

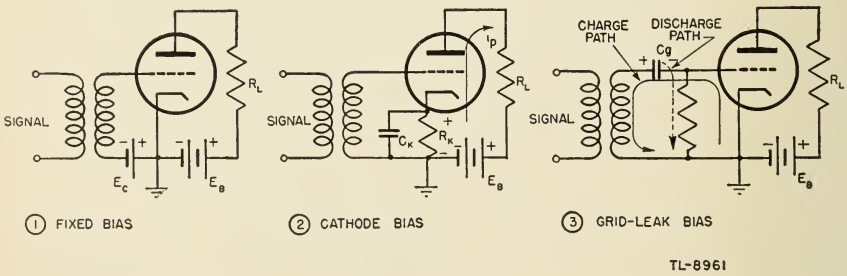

Figure 65. Methods of obtaining grid bias.

put cycle which causes the grid to be positive with respect to the cathode, grid current flows from cathode to grid, charging capacitor C_g. When the grid draws current the grid-to-cathode resistance of the tube drops from an infinite value to a very low value, on the order of 1,000 ohms, making the charging time constant of the capacitor very short. This enables C_g to charge up to essentially the full value of the positive input voltage and results in the grid, which is connected to the low potential

plate of the capacitor, being held essentially at ground potential. During the negative swing of the input signal no grid current flows and the discharge path of C_g is through R_g which has a value on the order of 500,000 ohms. The discharge time constant for C_g is, therefore, long in comparison to the period of the input signal and only a very small part of the charge on C_g is lost. Thus, the bias voltage developed by the discharge of C_g is substantially constant and the grid is not permitted to follow the positive portions of the input signal.

g. Distortion. Referring to the characteristic curve shown in figure 63, when the grid voltage e_g variation is within the limits of the straight-line portion of the characteristic curve, the plate current faithfully reproduces the grid-voltage waveform. However, if the fixed grid bias is high, the amplitude of the output waveform is considerably distorted. The extent of this distortion depends upon the actual biasing point of the tube. The point on the zero axis intersected by the characteristic curve is commonly known as the *cut-off* point. An amplifier biased at cut-off functions much as a diode rectifier, since only alternate half-cycles are reproduced in the output circuit. When an amplifier is biased well beyond cut-off and is driven with an excessively large input grid voltage, only that part of the grid-voltage waveform extending into the operating region of the characteristic curve is reproduced (distorted) in the output.

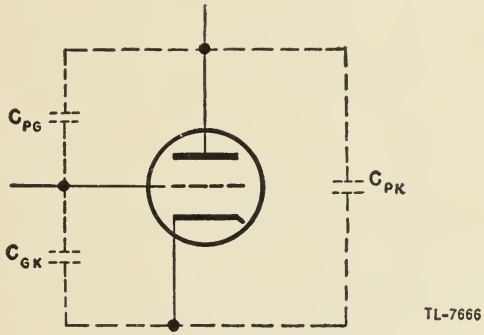

Figure 66. Schematic representation of interelectrode capacitance.

h. Interelectrode capacitance. (1) Capacitance exists between any two pieces of metal separated by a dielectric. The amount of capacitance depends upon the size of the metal pieces, the distance between them, and the type of dielectric. The electrodes of a vacuum tube have a similar characteristic known as the interelectrode capacitance, illustrated schematically in the triode (fig. 66). The direct capacitances that exist in a triode are the grid-to-cathode capacitance, the grid-to-plate capacitance, and the plate-to-cathode capacitance.

(2) The effective capacitance of a tube, measured when the electrodes are disconnected from a circuit, are not as great as when the electrodes are connected. This is due to the shunting effects of the circuit wiring, tube bases, and sockets.

(3) Interelectrode capacitance, though very small, has a coupling effect and often can unbalance a circuit with which it is associated. In this

respect, the grid-to-plate capacitance generally causes the greatest trouble. At high frequencies the grid-to-plate capacitance can feed back some of the plate voltage in phase with the grid voltage and thus cause undesirable oscillations. This internal feedback can be neutralized by feeding back a voltage of equal magnitude and opposite polarity from the plate to the grid circuit. Such an external capacitance is known as a neutralizing capacitor. It usually is variable to permit adjustment for precise cancellation of the objectionable internal feedback voltage.

(4) At ultra-high frequencies (uhf), interelectrode capacitance becomes very objectionable and prevents the use of ordinary vacuum tubes. Special u-h-f tubes are used at such operating frequencies. These tubes are characterized by very small physical dimensions and closely spaced electrodes and often do not have conventional tube bases.

23. MULTI-ELEMENT TUBES. a. General. Many desirable characteristics can be attained in vacuum tubes by the use of more than one grid. The most common of these are tetrodes, four electrode tubes; and pentodes, five electrode tubes. Others containing as many as eight electrodes are available for certain applications.

b. Tetrodes. (1) The large values of the interelectrode capacitances of the triode, particularly the plate-to-grid capacitance, impose a serious limitation as an amplifier at high frequencies. In order to reduce the plate-to-grid capacitance a second grid, called a screen grid, is inserted between grid and plate of the tube, figure 67①, and supplied with a potential

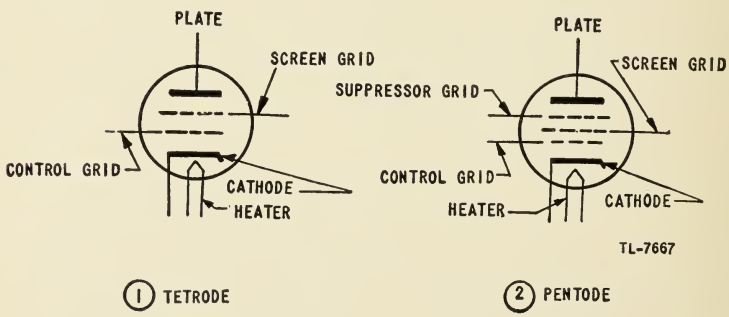

Figure 67. Schematic diagrams of tetrode and pentode.

usually somewhat less positive than that of the plate. The positive voltage on the screen grid accelerates the electrons moving from the cathode. Some of these electrons strike the screen and produce a screen current which, as a rule, serves no useful purpose. The larger portion, however, pass through the open-mesh screen grid to the plate.

(2) Because of the presence of the screen grid a variation of plate voltage has little effect on the flow of plate current, the control grid on the other hand retains its control over the plate current. The tetrode has high plate resistance and amplification factor ranging up to 800. By proper

design the transconductance can also be made high. A typical family of plate characteristic curves of a tetrode is shown in figure 68.

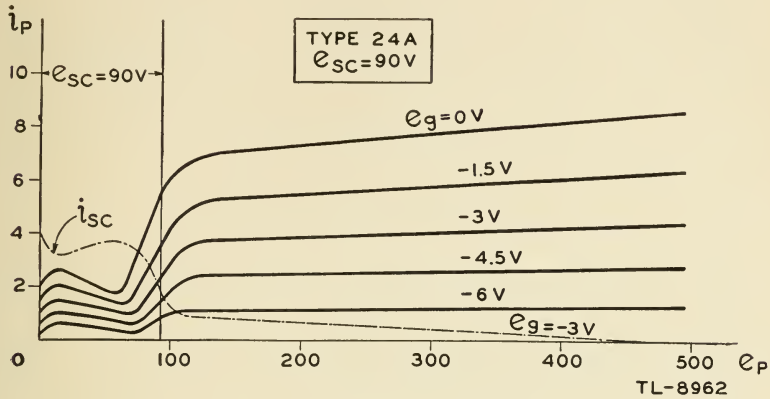

Figure 68. Typical i_p vs. e_p tetrode characteristic.

(3) The negative slope of the plate characteristics at plate voltages lower than the screen voltage is the result of *secondary emission* from the plate. With the screen voltage fixed, the velocity with which the electrons strike the plate increases with the plate voltage. When the electrons strike the plate with sufficient force, other loosely held electrons are knocked out of the plate material into the space between the plate and screen and, since the screen is at a higher positive potential than the plate, are attracted to the screen. The flow of these secondary electrons to the screen is in the opposite direction to the normal flow from cathode to plate so that the plate current is decreased. This reduction of plate current continues until the potential of the plate approaches the screen grid potential. Further increase in plate voltage causes the secondary electrons to be pulled back to the plate and the plate current again increases. The region in which plate current decreases as the plate voltage increases is called *negative resistance* because this action is opposite to that encountered in a normal or positive resistor. In the application of tetrodes it is necessary to operate the plate at an abnormally high voltage in order to overcome the effects of secondary emission.

c. Pentodes. (1) The addition of a third grid, called the *suppressor* grid, between the plate and the screen eliminates the effect of secondary emission of the tetrode. Introduction of the fifth electrode produces a pentode (fig. 67②). In this tube, the suppressor grid, usually connected to the cathode, serves to repel or suppress secondary electrons, driving them back into the plate from which they were ejected, and permits a smooth rise of plate current from zero up to its saturation point as the

plate voltage is increased. Typical pentode plate characteristics are shown in figure 69.

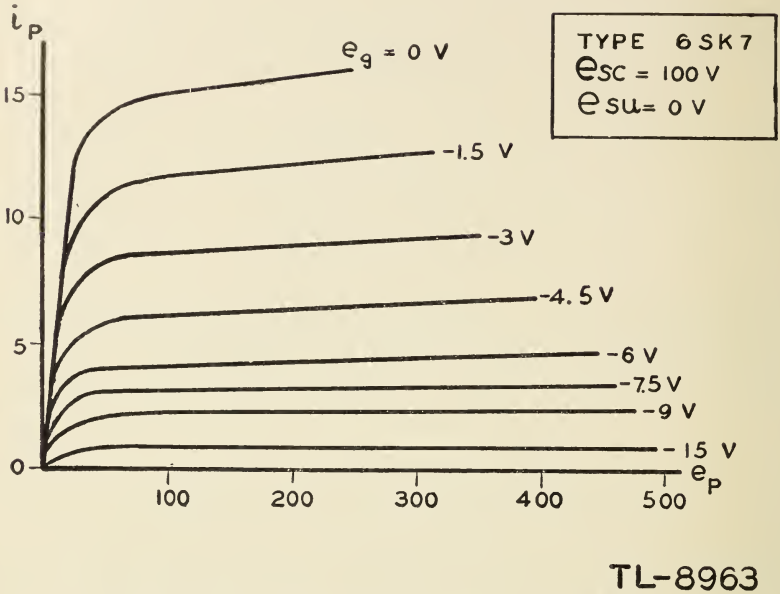

Figure 69. Typical i_p vs. e_p pentode characteristics.

(2) The pentode can be used to produce an increased power output for a given input grid voltage. The amplification factor of pentodes is high, ranging from 100 to 1,500. The plate resistance and transconductance of pentodes are both fairly high.

d. Beam-power tubes. A special type of tetrode which functions in the manner of a power pentode is called a beam-power tube. Instead of using a suppressor grid to control the secondary emission from the plate, this tube obtains the same effect by shaping the tube electrodes in such a way as to control the space charge near the plate. A beam-forming plate, connected internally to the cathode, causes a concentration of electrons in the vicinity of the plate, thereby producing a region of minimum potential. As long as the plate potential is greater than the minimum potential because of the electron concentration, secondary electrons are returned to the plate. A beam-power tube operated at the same voltages as a normal tetrode provides more power output for a given signal voltage. This is accomplished without an increase in internal tube capacitances.

e. Multi-grid tubes. Vacuum tubes may be constructed with four, five, or six grids (fig. 70) in order to obtain certain characteristics. The grids may be used to influence the current flow according to additional frequencies to give equal control from grids excited from separate signal sources, or to enable the tube to be controlled by electronic-gain control circuits.

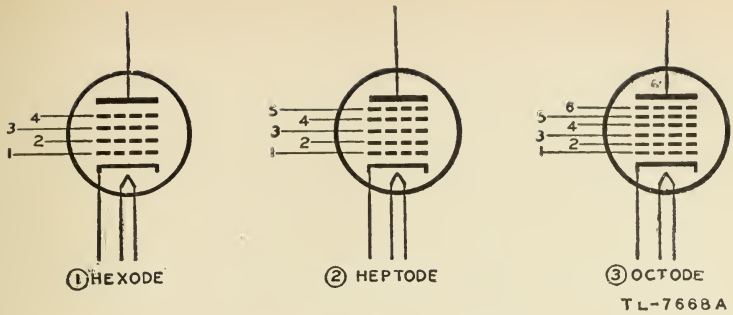

Figure 70. Multigrid tubes—schematic diagrams.

f. Multiunit tubes. To reduce the number of tubes in radio circuits the electrodes of two or more tubes frequently are placed within one envelope. Multi-unit tubes generally are identified according to the single type designations of the elements contained, such as duplex-diodes, diode-pentodes, diode-triode-pentodes, duplex-diode-triodes, and others. A number of these multiunit tubes are shown in figure 71.

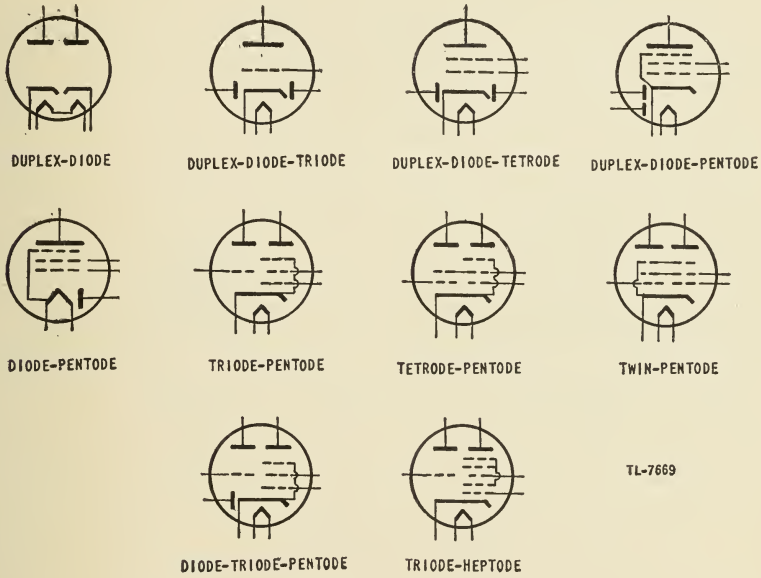

Figure 71. Multiunit tubes—schematic diagrams.

24. TUBES OPERATING AT ULTRA-HIGH FREQUENCIES. a. General. As the operating frequency is increased, the capacitive reactance between electrodes in the vacuum tube decreases $\left(X_c = \frac{1}{2\pi fC}\right)$. At frequencies higher than 100 megacycles the interelectrode capacitance of an ordinary vacuum tube bypasses radio frequencies very effectively. The electron transit time is about one one-thousandth of a microsecond. Although this

may seem an insignificant amount of time, it approaches and sometimes equals the time of a cycle within the tube, thus causing an undesirable shift in phase.

b. Ordinary tubes. A small number of ordinary vacuum tubes can be operated at frequencies higher than 100 megacycles under certain critical operating conditions. The most suitable tubes of this type are triodes having low interelectrode capacities, close spacing of the electrodes to reduce the transit time, a high amplification factor, and a fairly low plate resistance. Since some of these requirements are conflicting, tubes which strike a happy medium are generally selected. The operation of certain ordinary vacuum tubes at extremely high plate voltages is sometimes permitted in radar circuits to reduce the electron transit time.

c. Special U-H-F tubes. (1) The amount of interelectrode capacitance, the effect of electron transit time, and other objectionable features of ordinary vacuum tubes are minimized considerably in the construction of special tubes for use at ultra-high frequencies. These u-h-f tubes have very small electrodes placed close together and often have no socket base. By a reduction in all physical dimensions of a tube by the same scale, the interelectrode capacities are decreased without affecting the transconductance or the amplification factor. Transit time likewise is reduced, as is also the power-handling capacity of a tube of small dimensions.

(2) The "Acorn" types of vacuum tubes (fig. 72) have been developed specially for u-h-f operation and are available as diodes, triodes, or r-f pentodes. Acorns are very small physically, have closely spaced electrodes, and have no base; the tube connections are brought out to

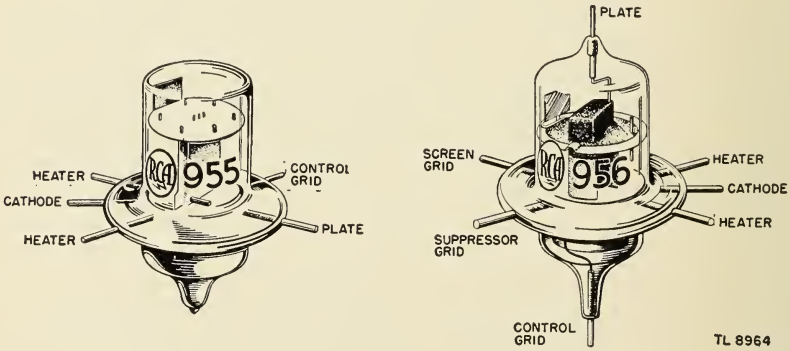

Figure 72. Acorn tubes.

short wire pins sealed in the glass envelope. An enlarged version of the Acorn types is known as the "door-knob" tube, which operates at considerably higher powers and at frequencies as high as 600 megacycles.

25. GAS-FILLED TUBES. a. General. (1) In the manufacture of the high-vacuum tube an attempt is made to remove as much air as possible from the envelope. If too much air is present, the characteristics change considerably and the tube no longer is useful for its original purpose. In some cases low-vacuum tubes are designed purposely to contain a gas in place of air--usually nitrogen, neon, argon, or mercury vapor.

(2) In a high-vacuum tube the voltages on the electrodes retain complete control of the current flowing. However, in a gas-filled tube, the voltages on the electrodes lose control as soon as conduction starts.

(3) The gas-filled tube normally is capable of conducting much higher currents than the high-vacuum tube. It also presents a lower impedance to the external circuit. Three types of gas-filled tubes are shown in figure 73. The small dot within the circle indicates that the tube is gas-filled.

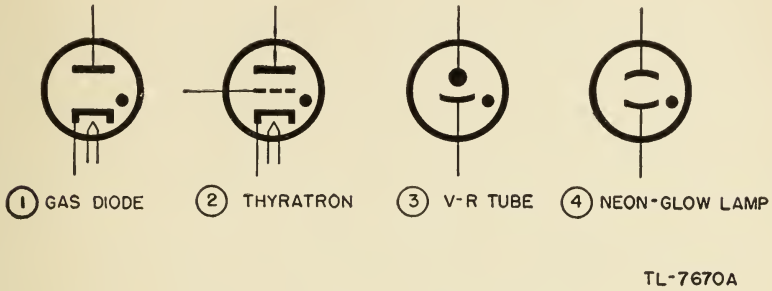

Figure 73. Typical gas-filled tubes—schematic diagram.

b. Electrical conduction in gas tubes. (1) in a gas-filled diode (fig. 73①) the electron stream from the hot cathode encounters gas molecules on its way to the plate. When an electron collides with a gas molecule the energy transmitted by the collision may cause the molecule to release an electron. This second electron then may join the original stream of electrons and may be capable of liberating other electrons. This process, which is cumulative, is a form of *ionization.* The molecule which has lost an electron is called an ion. An operating gas-filled tube has molecules, ions, and free electrons present within the envelope. The free electrons, greatly increased in quantity by the ionization, continue to the diode plate. The heavier positive ions drift toward the negative cathode and during their journey attract additional electrons from the cathode.

(2) The energy needed to dislodge electrons from the atomic orbits and produce the ionization is supplied by means of the voltage between the plate and the cathode. There is a certain voltage value for a particular gas-filled tube at which ionization begins. When ionization occurs, large currents flow at comparatively low voltages. The voltage value at which ionization commences is known as the *ionization potential, striking potential,* or *firing point.*

(3) After ionization has started, the action maintains itself at a voltage considerably lower than the firing point. However, a minimum voltage exists which is needed to maintain the ionization. If the voltage across the tube falls below this minimum value, the gas de-ionizes and the conduction stops. This lower voltage is known as the *de-ionizing potential* or *extinction potential.* Thus the tube can be used as an electronic switch, which closes at a certain voltage permitting current to flow, and then opens at some lower voltage blocking the current flow. Such a tube has almost infinite resistance in a circuit when the voltage is too low for the tube to operate, and yet may have a very low resistance when ionized.

(4) When a gas-filled tube is placed in an a-c circuit, the inverse-voltage rating of the tube should be known. The tube conducts in its normal manner and at a fairly low voltage from a negative cathode to the positive plate. But if the voltage polarity is reversed, any ions still present tend to move to the plate instead of to the cathode. These ions also tend to become neutral by combining with free electrons, but a definite amount of time is required to accomplish this. At low frequencies there is sufficient time for the neutralization to take place before the full reversed voltage is applied. But as the operating frequency is increased the time available for the ions to combine with the electrons becomes less and less. Finally, *arc-back* (inverse current flow) occurs because too many ions remain between the plate and the cathode. Because arc-back causes the tube to be a low resistance on both halves of the cycle, the power dissipated in the tube in arc-back is greatly increased, which will probably destroy the tube. At high frequencies of operation this arc-back may occur at a fairly low voltage. Hence the tube is said to have a low inverse-voltage rating.

c. Gas-filled diodes. (1) The neon-glow lamp or neon bulb (fig. 73④) is a cold-cathode gas-filled diode. The cathode may have the same shape and size as the plate so that the tube can conduct in either direction depending only on the applied potential, or the cathode may be larger than the plate (fig. 73③) to permit conduction in only one direction. Since the cathode is not heated in tubes of this type, there are no electrons emitted to help in the ionization process. Therefore, the firing potential for a neon-glow tube is higher than that for a tube in which a hot cathode is used, and the neon tube is somewhat erratic in that this firing potential varies slightly during operation. The passage of current through the tube is indicated by a glow which has a varying color depending on the gases that may be mixed with the neon. The glow is found on the negative electrode, or cathode. When an alternating voltage is applied to the neon-glow lamp both electrodes are surrounded with glow discharge. Since a strong r-f field is able to cause ionization, a neon lamp may be used to detect the presence of an r-f field. A glow tube may also be used as a voltage regulator because the voltage across the tube remains nearly constant over a wide range of current through the tube. Additional uses of glow tubes are for the production of light, as oscillator, control of current or power, protection of circuits, and as a rectifier.

(2) Another type of gas-filled diode is designed for use only as a rectifier. The gas used is generally mercury vapor. Tubes of this type are able to pass much higher currents than high-vacuum tubes because the ionization of the mercury vapor makes it unnecessary to rely for conduction solely on the electrons omitted from the cathode. The mercury vapor is formed in these tubes when the small amount of liquid mercury within the envelope is vaporized by the hot cathode. It must be remembered in operating equipment which uses mercury-vapor rectifiers that these tubes are not capable of supplying their rated output *until the mercury is completely vaporized.* Therefore, sufficient time must be allowed for the tube to become heated before the plate voltage is applied.

d. Thyratrons. A gas-filled triode (fig. 73②) or tetrode in which a grid is used to control the firing potential is called a thyratron. A small starting current is necessary for all gas-filled tubes, but this current is not developed until the ionization point is reached. When the control

grid of a thyratron is made more negative, more voltage must be applied across the tube to produce the required starting current. The variation in grid bias necessary to produce the starting current and therefore conduction for various values of plate voltage is shown in figure 74. Points

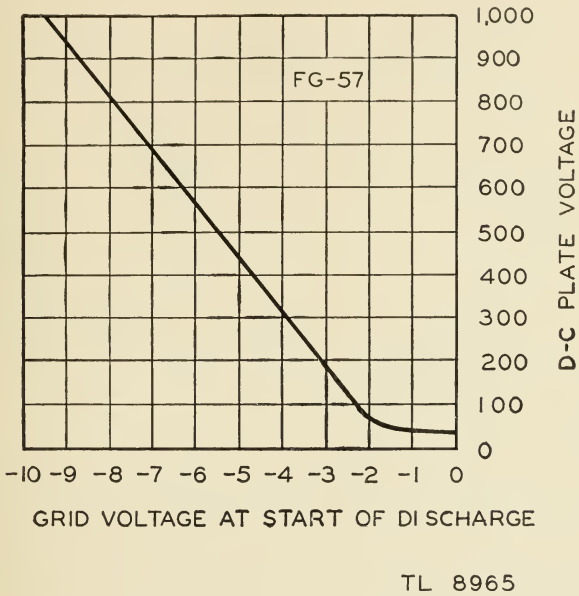

Figure 74. Grid control characteristics of typical thyratron.

which lie to the right of the curve represent conduction, and for points to the left of the curve the tube is nonconducting. The curve itself shows the critical bias at which conduction begins. However, once the thyratron fires, the grid loses control and is not capable of affecting the current flow. The uses to which the thyratrons may be put are very numerous because a relatively small tube, such as the FG–57 for which the curve in figure 74 is drawn, is capable of controlling a large amount of power. In radar, thyratrons are used principally in sawtooth generators and in motor-control circuits.

26. CATHODE-RAY TUBES. Cathode-ray tubes are vacuum tubes of special construction which permit the *visual* observation of currents and voltages. A complete discussion of their construction and operation will be found in sections VIII and IX.

27. ELECTRON-RAY TUBES. The electron-ray tube or *magic eye* contains two sets of elements, one of which is a triode amplifier and the other a cathode-ray indicator. The plate of the triode section is internally connected to the ray-control electrode (fig. 75①), so that as the plate voltage varies in accordance with the applied signal the voltage on the ray-control electrode also varies. The ray-control electrode is a metal cylinder (fig.

75②) so placed relative to the cathode that it deflects some of the electrons emitted from the cathode. The electrons which strike the anode cause it to fluoresce, or give off light, so that the deflection caused by the ray-control electrode, which prevents electrons from striking part of

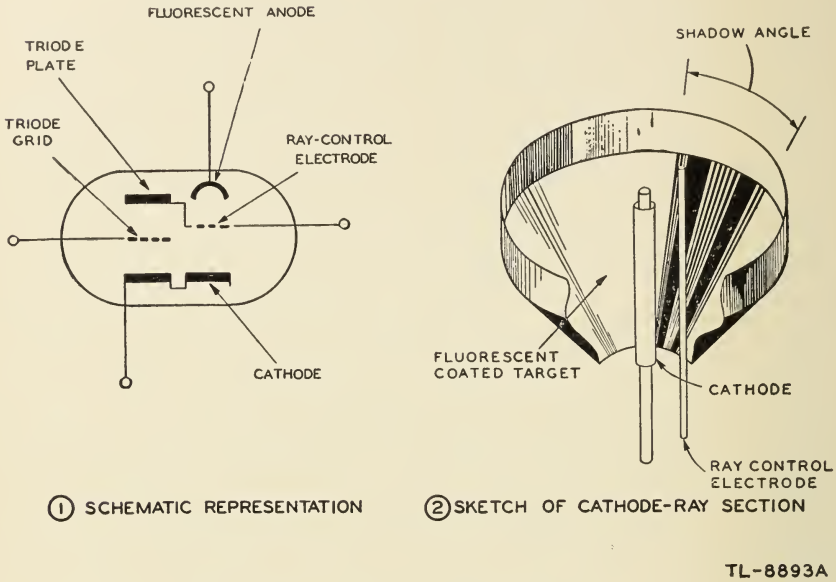

Figure 75. Electron-ray tube.

the anode, produces a wedge-shaped electrical shadow on the fluorescent anode. The size of this shadow is determined by the voltage on the ray-control electrode. When this electrode is at the same potential as the fluorescent anode, the shadow disappears; if the ray-control electrode is less positive than the anode, a shadow appears the width of which is proportional to the voltage on the ray-control electrode. Thus, if the tube is calibrated, it may be used as a voltmeter where rough measurements suffice. However, the principal uses of the magic eye tube are as a tuning indicator in receiving sets and as the balance indicator in electrical bridge circuits.

SECTION V

POWER-SUPPLY CIRCUITS

---

28. RECTIFIER CIRCUITS. a. General. (1) A rectifier is a device by means of which an alternating current is changed into a direct current. In general, the magnitude of this direct current is not constant, as it may contain a small pulsating component called *ripple*. A few of the devices which perform this rectifying function are electronic tubes, metallic-oxide (or dry-contact) rectifiers, crystal rectifiers, electrolytic rectifiers, and mechanical rectifiers. Of these, electronic rectifier tubes are by far the most important in radar, although use is made of the dry-contact type in some applications.

(2) The operation of most radio circuits requires that a direct voltage be applied to the plate- and screen-grid circuits of the tubes. This d-c supply may be obtained from batteries if the total amount of power required is not large. If more power is needed than can be supplied conveniently from batteries, a d-c generator may be used. However, most electrical energy now is generated as alternating current, which must be rectified for use in radio circuits. Electronic rectifiers, which are capable of rectifying very large amounts of power, can supply direct current to even the most powerful radio transmitters.

(3) There are two general types of electronic rectifiers. The first type, the high-vacuum or "hard" tube rectifier, is used where a small or moderate current is needed or where very high voltage must be rectified. The second type, the gas-filled and vapor-filled or "soft" tube rectifier, is used where a large current is required.

b. Half-wave rectifier. (1) A half-wave rectifier is a device by means of which alternating current is changed into pulsating direct current by using only one-half of each cycle.

(2) In a diode, electrons are attracted to the plate when it is more positive than the cathode. When the plate becomes negative relative to the cathode, electrons are repelled by it and no electron current can flow in the tube. Therefore, a single diode may be used as a half-wave rectifier because a current can flow in the tube during only the half of the cycle when the plate is positive relative to the cathode.

(3) Figure 76 shows two simple half-wave rectifier circuits. In ① an alternating voltage supplied by a 115-volt a-c line is applied across the diode and the load resistor *R*, which is used to limit the current in the

tube during the period of conduction. In ② a transformer is added to increase the voltage applied to the tube. By selecting a transformer with the proper ratio, a very wide range of voltages can be obtained from a rectifier.

(4) When the applied voltage is positive, the plate of the diode is more positive than the cathode. Electrons, therefore, flow up from ground,

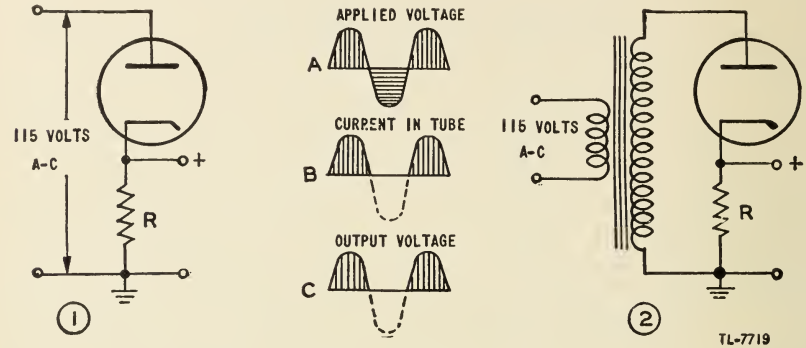

Figure 76. Simple half-wave rectifier circuits.

through the load resistor, through the tube, and back again to ground through the a-c source. At the beginning of the positive half-cycle, a few electrons are attracted to the plate. As the plate of the diode becomes more positive, the electron flow increases until the maximum value of the positive half-cycle is reached. As the voltage decreases, the electron flow also decreases until at zero voltage between plate and cathode conduction ceases entirely. No electron current can flow during the negative half-cycle. This flow of electrons produces a positive pulse of voltage across the load resistor *R*.

(5) Since the electron-current flow in the diode and in the load resistor is always in one direction, the alternating current is changed into a pulsating direct current. The waveform of the current in the diode is shown at B in figure 76①. A current flows in the load during the positive half-cycle only. That is why this type of circuit is called a half-wave rectifier.

(6) Because the half-wave rectifier uses only one-half of the input wave its efficiency is low, and the direct voltage output is small if a current in excess of a few milliamperes is required by the load. These disadvantages limit the use of the half-wave rectifier to applications which require a very small current drain. The widest application of the half-wave rectifier is for the accelerating voltage supply anode of an oscilloscope.

c. Full-wave rectifier. (1) A full-wave rectifier is a device which has two or more elements so arranged that the current output flows in the same direction during each half-cycle of the alternating-current supply.

(2) Full-wave rectification may be accomplished by using two diodes connected as in figure 77. The cathodes of the two diodes are tied together and the junction is tied to one end of the load resistor. The other end of the load resistor is tied to the center tap *C* of the transformer secondary. The two halves of the secondary winding, *AC* and *BC*, may

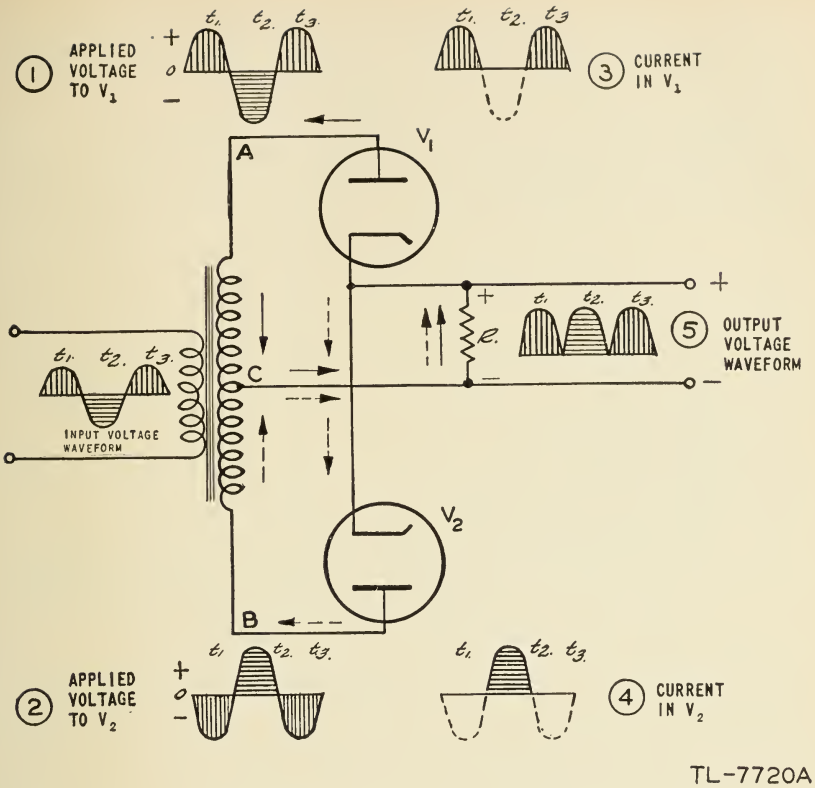

Figure 77. Full-wave rectifier circuit.

be a center-tapped winding as shown, or may be separate windings. Some way must always be provided to connect the load to a point midway in potential between A and B so that equal plate current of each tube may flow through the load resistance.

(3) The part of the secondary winding AC may be considered a voltage source which produces a voltage of the shape shown in figure 77①. This voltage is impressed on the tube V_1 and the load resistor R in series. During the half-cycle marked t_1, the plate of V_1 is positive relative to its cathode. Therefore, an electron current flows in the direction shown by the solid arrows. This current causes a voltage drop across the load resistor R such that the upper end of R is more positive than the lower end. During this same half-cycle the voltage across BC makes the plate V_2 negative relative to its cathode, as in ②, and this tube is nonconducting. A half-cycle later, at t_2, the voltages on the plates of the two tubes are reversed. V_2 now is conducting, and V_1 nonconducting. The electron current which passes through V_2 flows in the direction indicated by the dotted arrows. This current also produces a positive pulse of voltage across the load resistor, as at t_2 in ⑤. A comparison of ③ with ④ shows that only one tube is conducting at any given instant. The electron current contributed by V_2 flows through the external circuit R in the same direction as the electron current contributed by V_1.

(4) Since there are two pulsations of current in the output for each cycle of the applied alternating current, the full-wave rectifier is more efficient than the half-wave rectifier, has less ripple effect, and may be used for a much wider variety of applications.

d. Bridge rectifier. (1) If four rectifiers are connected as shown in figure 78, the circuit is called a *bridge rectifier*. The input to such a circuit is applied to diagonally opposite corners of the network, and the output is taken from the remaining two corners.

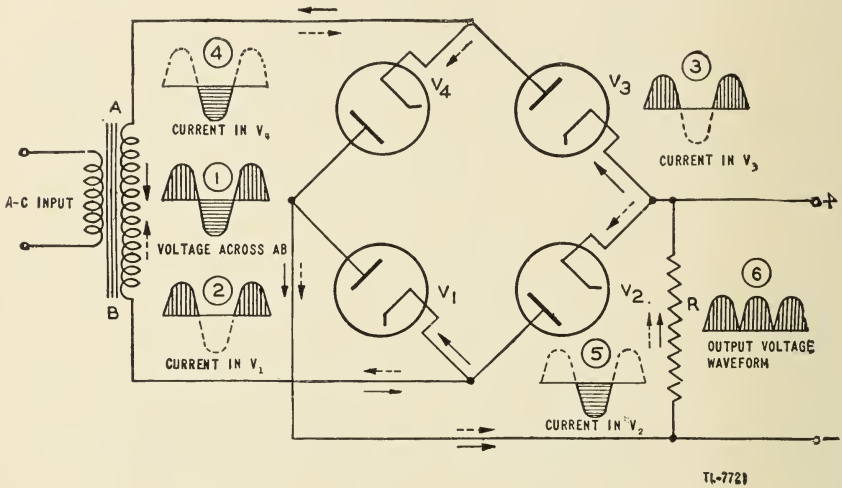

Figure 78. Bridge-rectifier circuit.

(2) During one-half cycle of the applied alternating voltage (figure 78①), point A becomes positive with respect to point B by the amount of the voltage induced in the secondary of the transformer. During this time, the voltage across AB may be considered to be impressed across a load consisting of V_1 load resistor R, and V_3 in series. The voltage applied across these tubes makes their plates more positive than their cathodes, and an electron current flows in the path indicated by the solid arrows. The waveform of this current is shown in ② and ③. One-half cycle later, V_1 and V_3 are nonconducting, and an electron current (fig. 78④ and ⑤) flows through tubes V_2 and V_4 and the load resistor in the direction indicated by the dotted arrows. The current through the external load R is always in the same direction. This current in flowing through R develops a voltage of the type shown in ⑥. The bridge rectifier is a full-wave rectifier since current flows in the load during both halves of a cycle of the applied alternating current.

(3) One advantage of a bridge rectifier over a conventional full-wave rectifier is that with a given transformer the bridge circuit produces a voltage output nearly twice that of the full-wave circuit. This may be shown by assigning values to some of the components in figures 77 and 78. Assume that the same transformer is used in both figures. The peak voltage developed between A and B is 1,000 volts in both figures. In the full-wave circuit in figure 77, the peak voltage from the center tap C to either A or B is 500 volts. Since either V_1 or V_2 is conducting at any in-

stant, the maximum voltage that can be rectified at any instant is 500 volts. Therefore, the maximum voltage that can be developed across the load resistor R is 500 volts, less the small voltage drop across the tube which is conducting. In the bridge circuit in figure 78, however, the maximum voltage that can be rectified is the full voltage of the secondary of the transformer or 1,000 volts. Therefore, the voltage that can be developed across the load resistor R is 1,000 volts less the voltage drop across the two tubes which are conducting. Thus the full-wave bridge circuit produces a higher output voltage than the conventional full-wave rectifier does with the same transformer.

(4) A second advantage of the bridge circuit is that the inverse voltage across a tube is half the inverse voltage impressed on a tube in a conventional full-wave rectifier which is designed for the same output voltage. For example, if the two circuits are to produce the same output voltage, the transformer secondary in the full-wave rectifier (fig. 77) has to have a 2,000-volt peak developed across it, while that for the bridge rectifier (fig. 78) has only a 1,000-volt peak. When V_1 in figure 77 is not conducting, its plate is made negative relative to its cathode by a maximum voltage of 1,000 volts. This negative voltage is called the inverse peak voltage, which is a stress that tends to cause break-down within the tube. In figure 78, however, when the tubes V_1 and V_2 are not conducting, the maximum inverse voltage applied to the two tubes in series is 1,000 volts. The inverse peak voltage for any one tube then is 500 volts, which is half of the inverse voltage across either tube in figure 77.

(5) Vacuum tubes are not used as widely in bridge-rectifier circuits as they are in other types of rectifier circuits because of the greater number of tubes required and because three separate filament transformer windings are needed. The filaments of V_2 and V_3 in figure 78 are at the same potential, but the filament of V_1 is at a different potential from either V_4 or V_2. The three filament transformers must be well insulated from each other and from ground because of the high potentials to which they are subjected.

e. Metallic-oxide rectifiers. (1) Certain combinations of thin films of metals permit electrons to flow more easily in one direction than in the other. At least two combinations show this characteristic sufficiently well to warrant their commercial production for use as rectifiers. One combination is a thin film of copper oxide on a copper plate. The other is an

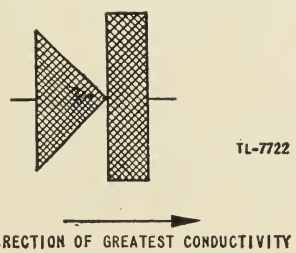

Figure 79. Metallic-oxide rectifier—schematic representation.

especially prepared film of selenium on a metallic surface such as iron. These devices generally are represented by the symbol shown in figure 79. The triangular part of the figure may be considered to be an arrowhead

which points in the direction in which electrons may pass through the rectifier most easily. In the copper-oxide rectifier electrons can pass from the copper to the copper oxide, much more easily than in the opposite direction.

(2) Figure 80 shows a half-wave rectifier in which a metallic-oxide rectifier is used instead of a vacuum tube. Electrons flow freely from the copper plate to the copper oxide when the copper oxide is more positive than the copper plate (at times t_1 and t_3 in fig. 80①). At time t_2, when

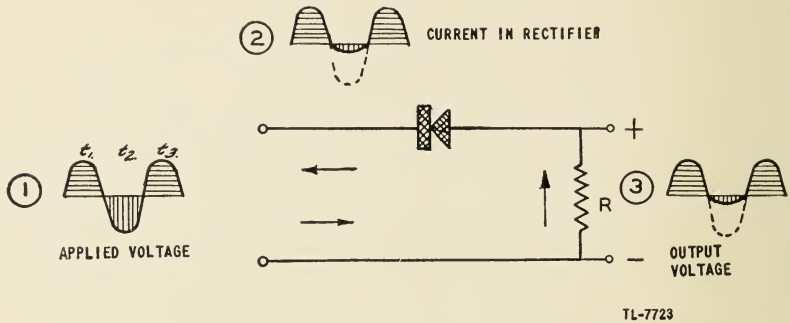

Figure 80. Half-wave copper-oxide rectifier.

the copper is positive relative to the copper oxide, a very small current flows, as indicated in ②. The voltage output of this circuit is shown in ③.

(3) Because the copper-oxide film is thin, the copper-oxide rectifier cannot withstand a very large voltage. Where moderate voltages must be used, several layers of copper and copper oxide are built up into a stack (fig. 81). The washer of soft metal, generally lead, is placed between the elements to provide uniform pressure between the copper and the copper oxide. Because of the low inverse voltage which causes break-down, the

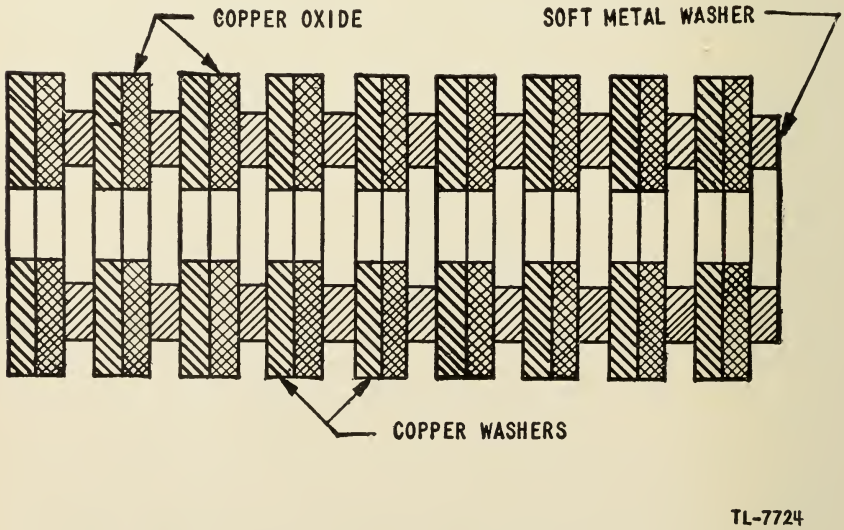

Figure 81. Construction of copper-oxide rectifier.

copper-oxide rectifier is not used often in the half-wave circuit shown in figure 80.

(4) Since the bridge-rectifier circuit has a relatively low inverse-peak voltage across each rectifying element, this connection generally is used with copper-oxide and selenium rectifiers (fig. 82①). When the point A is positive relative to point B, sections 1 and 3 conduct, as shown by the solid arrows. A half-cycle later, when B is positive with respect to A, sections 2 and 4 conduct, as shown by the dotted arrows. The current in R is always in the same direction. Figure 82② shows how the same circuit generally appears physically.

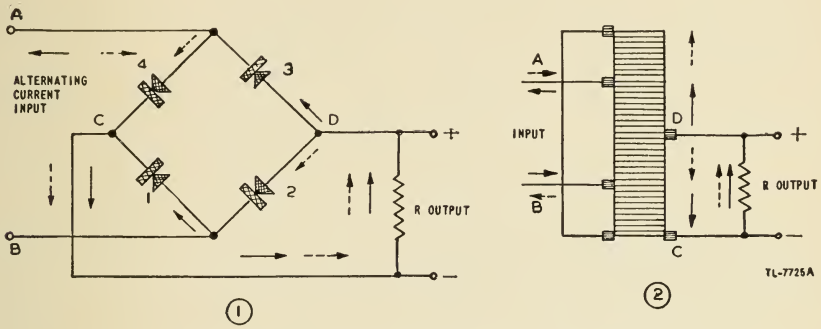

Figure 82. Copper-oxide full-wave rectifier.

(5) A transformer seldom is used to raise the voltage applied to a copper-oxide rectifier because of the low inverse-peak voltage rating. The bridge circuit is especially advantageous in this case because it eliminates the need for a transformer to provide a center tap for full-wave rectification, and because it reduces the inverse peak voltage.

(6) This type of rectifier is particularly suitable for supplying a relatively large direct current because the rings of copper and copper oxide may be made large in area, and cooling fins may be employed easily with the stack of washers. The resistance of the selenium rectifier in the forward or conducting direction is less than that of the copper-oxide rectifier. For this reason, the selenium rectifier is somewhat more efficient and can pass a greater current than can a copper-oxide rectifier of similar size. The metallic-oxide rectifiers are used to run small d-c motors, to operate relays, to supply bias, and to charge storage batteries.

f. Voltage doubler. (1) A voltage doubler is a circuit in which two capacitors are charged on alternate half-cycles and are so arranged that the voltages on the two capacitors add in the output. Such a circuit is capable of delivering at the output a voltage which is twice the peak voltage of the applied alternating voltage.

(2) The conventional voltage doubler is shown in figure 83. When point A on the transformer secondary is more positive than point B, a voltage is impressed across the tube V_1 in series with capacitor C_1. Since the plate of V_1 is more positive than its cathode, electrons are attracted to the plate and flow around the circuit as shown by the solid arrows. The source of electrons must be capacitor C_1. The electrons which leave the upper capacitor plate flow through V_1 and accumulate on the lower

plate of C_1. Thus, the upper plate C_1 becomes positive relative to the lower plate by a voltage equal to the peak voltage of the input sine wave.

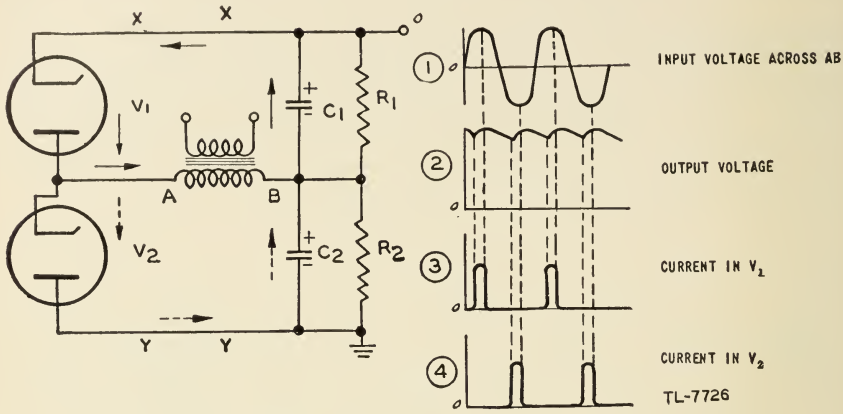

Figure 83. Conventional voltage doubler.

During the next half-cycle, since V_1 does not conduct, C_1 can discharge slightly by allowing a few electrons to flow from the lower plate of C_1 through the resistor R_1 to the upper plate of C_1. While C_1 is discharging in this way, capacitor C_2 is being charged by the electron current which flows through V_2. This current flows in the direction shown by the dotted arrows. The output voltage is taken between point O and ground and therefore is equal to the sum of the voltages on C_1 and C_2 which is twice the peak voltage developed across the transformer secondary.

(3) The waveforms of the input and output voltages are shown in figure 83① and ②. Since a current flows in V_1 only when the voltage across the tube is greater than the voltage across C_1, figure 83③ shows that current flows for only a very short time in each cycle. This current begins to flow when the input sine wave rises above the voltage on the capacitor and stops flowing as soon as the sine wave begins to fall away from its peak voltage. Similarly figure 83④ shows that tube V_2 conducts during the half-cycles in which V_1 is nonconducting.

(4) The resistors R_1 and R_2 have a very large resistance, generally about 5 to 10 megohms each. These resistors are used to allow the charge on the capacitors to leak off when the transformer is not energized. This is necessary as a safety measure to prevent injury from the high voltage after the circuit has been turned off.

(5) Because the energy delivered to the load must come from discharging the capacitors C_1 and C_2 in series, the application of this type of circuit is limited to uses where the average load current is small. If a large current is drawn, the voltage across C_1 and C_2 falls greatly. However, if these capacitors are made large, about 10 microfarads, a very large current can be supplied with reasonably good voltage regulation if the load is on for only a few microseconds at a time. When the capacitors are made large, the rectifier tubes are likely to be damaged by the excessive peak current that flows during the short period of conduction. To protect the rectifier tubes in such a case, resistors of a few thousand ohms resistance are placed in the circuit between XX and YY (fig. 83).

(6) A different form of voltage-doubling circuit is the cascade voltage doubler (fig. 84). Assume initially that the tube V_2 is disconnected from the circuit. When end B of the transformer secondary is more positive than end A, electrons flow from the cathode of V_1 to the plate. The direction of flow is shown by the dotted arrows. The electrons which flow away from the right-hand plate of C_1 because of the attraction of the positive plate of V_1 constitute the current which flows in V_1. These same electrons accumulate on the left-hand plate of C_1. Because the left-hand

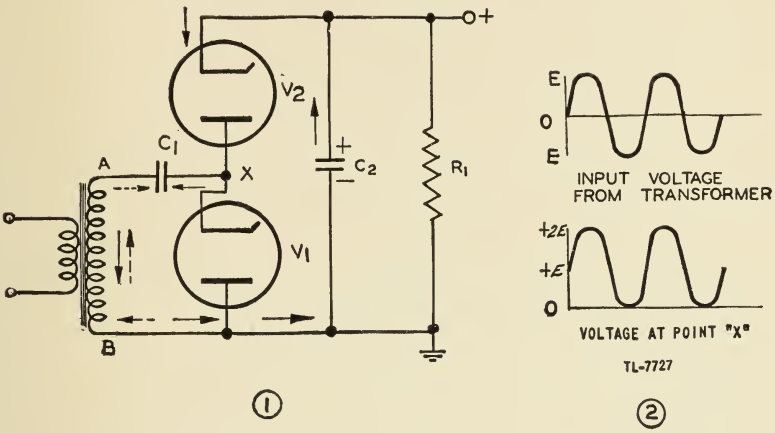

Figure 84. Cascade voltage doubler.

plate has an excess of electrons and the right-hand plate has a deficiency, the right-hand plate is positive relative to the left-hand plate. After a few cycles, enough electrons will have been moved around the circuit to have charged capacitor C_1 to the peak value of the sine-wave voltage output from the secondary of the transformer.

(7) The cathode of V_1 fluctuates in voltage between zero and twice the peak voltage of the input sine wave. This is caused by the shift in the axis of the sine-wave voltage which appears at point X (fig. 84②). If tube V_2 now is connected in the circuit, the voltage between X and ground tends to charge capacitor C_2 to the peak voltage existing at point X. This voltage, which is twice the peak voltage existing across AB, causes electrons to flow around the circuit in the direction shown by the solid arrows.

(8) Voltage-doubling circuits are used where it is inconvenient to use a transformer large enough to supply the high voltage required or where it is desired to obtain sufficient plate voltage to operate properly small vacuum tubes from a 115-volt a-c source without using a transformer. The voltage regulation in either type of voltage doubler is poor if the average load current exceeds a few milliamperes.

g. Voltage multiplier. (1) The cascade voltage doubler can be combined in series with a half-wave rectifier to provide an output which is equal to three times the peak voltage of the input. A voltage tripler

of this sort is shown in figure 85. Tubes V_1 and V_2 comprising the cascade voltage doubler, produce across C_2 a voltage of $2E$, twice the peak voltage E of the applied sine wave. Tube V_3, which is a half-wave

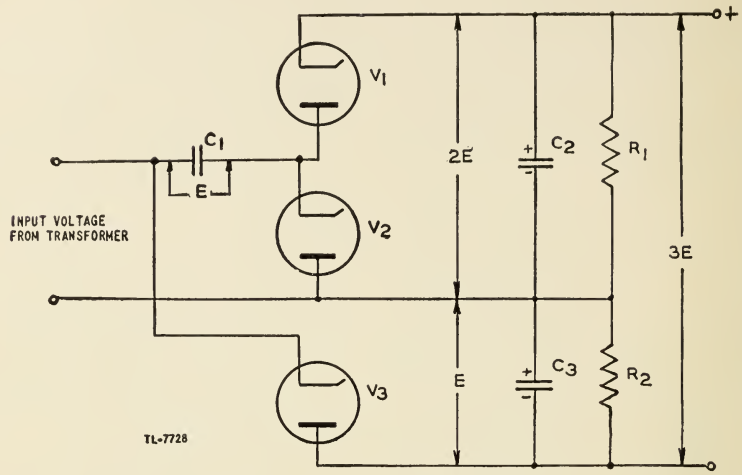

Figure 85. Voltage-tripler circuit.

rectifier, produces across C_3 a voltage E equal to the peak voltage of the applied sine wave. Since the voltage on C_3 adds to the voltage on C_2, the output of these two capacitors in series is three times the peak voltage of the input sine wave.

(2) Cascade voltage doublers may be combined in series to provide even higher multiplication of the input voltage than is possible with the voltage tripler. A quadrupler circuit is shown in figure 86. In this

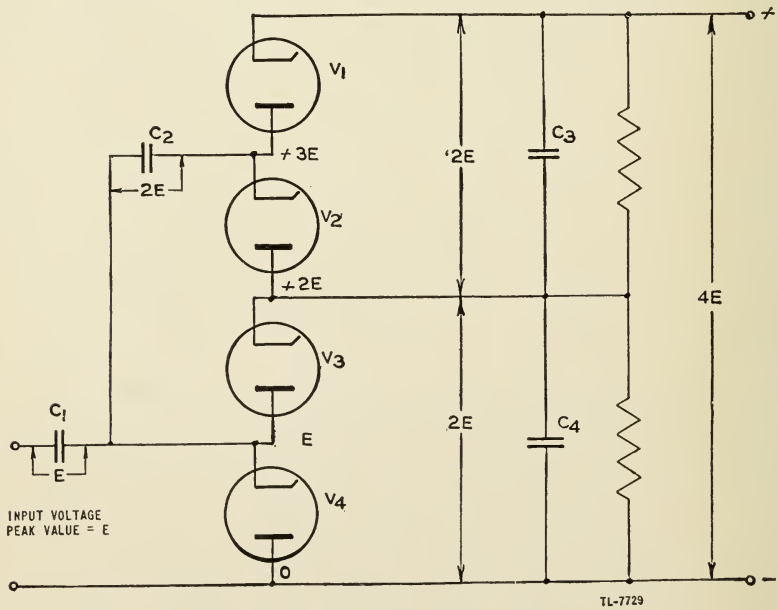

Figure 86. Voltage quadrupler.

circuit two cascade voltage doublers are arranged so that they are fed from a common source and so that their output voltages add in series. Note that the voltage across C_1 is equal to the peak of the input voltage, while the voltage across C_2 is equal to twice the peak voltage. The quadrupler can supply only a small current to a load if the output voltage is to be maintained at a high level.

(3) The process of adding cascade voltage doublers in series may be continued indefinitely. It is not practical to do so, however, because a separate filament transformer is required for each tube and each transformer must be insulated for high voltage. The voltage stress across the successive capacitors becomes greater as more multiplication is provided, and the possible load current that can be supplied becomes less because of the limitations on the peak-current ratings of the tubes.

29. FILTER CIRCUITS. a. General. (1) The output voltage of a rectifier always has the same polarity, but its magnitude fluctuates about an average value as the successive pulses of energy are delivered to

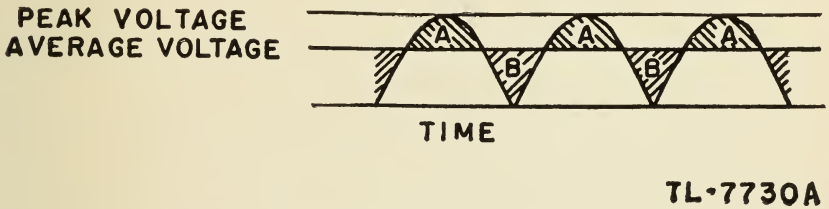

Figure 87. Average value of a rectifier output.

the load. In figure 87 the average voltage is shown as the line which divides the waveshape so that area A equals area B. The fluctuation of voltage above and below this average value is called *ripple*. The frequency of the main component of the ripple for the full-wave rectifier output shown in figure 87 is twice the frequency of the voltage which is being rectified. In the case of a half-wave rectifier the ripple has the same frequency as the input alternating voltage. Thus, if the input voltage is obtained from a 60-cycle-per-second source, the main component of the ripple in the output of a half-wave rectifier is 60 cycles per second and in the full-wave rectifier 120 cycles per second.

(2) The output of any rectifier is composed of a d-c voltage and an alternating or ripple voltage. For most applications, the ripple voltage must be reduced to a very low amplitude. The amount of ripple that can be tolerated varies with different applications of vacuum tubes.

(3) A circuit which eliminates the ripple voltage from the rectifier output is called a filter. Filter systems in general are composed of a combination of capacitors, inductors, and in some cases resistors.

b. Capacitance filter. (1) Ripple voltage exists because energy is supplied to the load by a rectifier in pulses. The fluctuations can be reduced considerably if some energy can be stored in a capacitor while the rectifier is putting out its pulse and allowed to discharge from the capacitor between pulses.

(2) Figure 88① shows the output of a half-wave rectifier. This

pulsating voltage is applied across a filter capacitor C to supply the load R. Since the rate of charging C is limited only by the reactance of the transformer secondary and the plate resistance of the tube in the rectifier, the voltage across the capacitor can rise nearly as fast as the

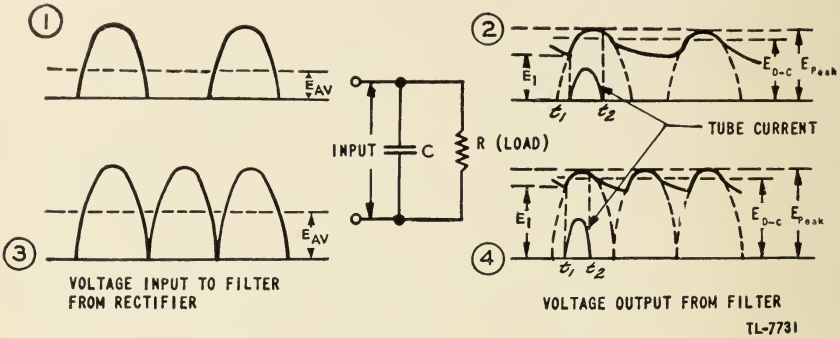

Figure 88. Capacitance-filter action.

half-sine-wave voltage output from the rectifier. The capacitor C, therefore, is charged to the peak voltage of the rectifier within a few cycles. The charge on the capacitor represents a storage of energy. When the rectifier output drops to zero, the voltage across the capacitor does not fall immediately. Instead, the energy stored in the capacitor is discharged through the load during the time that the rectifier is not supplying energy. The voltage across the capacitor falls off very slowly if a large capacitance is used. The amplitude of the ripple therefore is greatly decreased (fig. 88②).

(3) After the capacitor has been charged, the rectifier does not begin to pass current until the output voltage of the rectifier exceeds the voltage across the capacitor. Thus, in figure 88② and ④, current begins to flow in the rectifier when the rectifier output reaches a voltage equal to the capacitor voltage. This occurs at some time t_1 when the voltage has a magnitude of E_1. Current continues to flow in the rectifier until slightly after the peak of the half-sine wave, at time t_2. At this time the sine-wave voltage is falling faster than the capacitor can discharge. A short pulse of current which begins at t, and ends at t_2 is supplied therefore to the capacitor by the power supply.

(4) The average voltage of the rectifier output is shown in figure 88① and ③. Because the capacitor absorbs energy during the pulse and delivers this energy to the load between pulses, the output voltage can never fall to zero. Hence, the average voltage of the filtered output is greater than that of the unfiltered input, as shown by figure 88② and ④. However, if the resistance of the load is small, a heavy current is drawn by the load and the average or d-c voltage falls. For this reason, the simple capacitor filter is not used with rectifiers which must supply a large load current.

c. Inductance filter. (1) Since an inductor resists changes in the magnitude of the current flowing through it, an inductor can be placed in series with the rectifier output to help to prevent abrupt changes in the magnitude of the current.

(2) The dotted waveforms in figure 89② and ④ show the type of load current that is supplied by a half- and full-wave rectifier, respectively, a pure resistance load, or no filtering. If an inductor is added

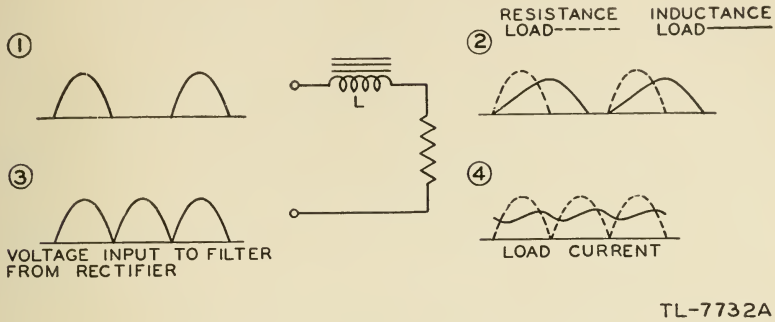

Figure 89. Inductance-filter action.

in series with the load resistor, the current is modified as shown by the solid curves in ② and ④. The modification takes place because the inductance of the load tends to prevent the current from building up or from dying down. If the inductance can be made large enough, the current becomes nearly constant.

(3) The inductance prevents the current from ever reaching the peak value that is reached without the inductance. Consequently, the output voltage does not ever reach the peak value of the applied sine wave. Thus a rectifier whose output is filtered by an inductor cannot produce as high a voltage as can one whose output is filtered by a capacitor. However, the inductance filter permits a larger current drain without a serious change of output voltage.

d. Inductance-capacitance filter. (1) The ripple voltage present in a rectifier output cannot be eliminated adequately in many cases by either the simple capacitor or inductor filter. Much more effective filters can be made if both inductors and capacitors are used. The capacitors handle the function of storing and releasing energy, while the inductors simultaneously tend to prevent change in the magnitude of the current. The

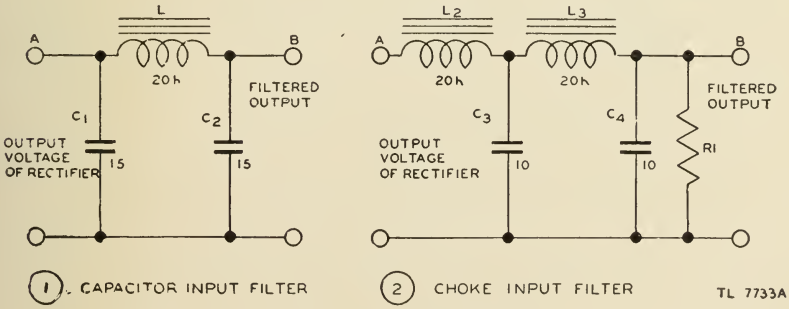

Figure 90. Inductance-capacitance filters.

result of these two actions is to remove the ripple from the rectifier output and to produce a voltage with a nearly constant magnitude.

(2) Since the output of a rectifier consists of a d-c voltage on which is superimposed an alternating or ripple voltage, the function of the filter is to remove the alternating component of this complex output. However, the relative impedance of the elements of a filter must be considered.

(3) In the circuit of figure 90①, the capacitor C_1 has infinite impedance to the d-c voltage but a very low impedance to the ripple voltage, so that most of the ripple voltage is bypassed by C_1. The remaining ripple voltage at A encounters a very high impedance in the inductor L_1. What little ripple voltage passes from A to B is largely shunted to ground by the low impedance of C_2. The result is that the voltage at point B has very little ripple. A similar analysis may be made for the circuit of figure 90②.

(4) Inductors which are used in rectifier filter circuits generally are called chokes because they serve to choke or stop the passage of the ripple voltage into the load. A circuit of the form of figure 90② is called a choke-input filter since the input to the circuit passes through a choke coil. The circuit in figure 90① is called a capacitor-input filter for a similar reason.

(5) When a load is placed on a power supply, the terminal voltage generally falls. This fall of voltage, expressed in percent, is called regulation. A circuit has poor regulation if a large drop occurs in the terminal voltage when full load is applied.

(6) A capacitor-input filter at no load produces a terminal voltage which is nearly equal to the peak voltage of the applied alternating voltage. As the load is increased, the terminal voltage falls, because the current drawn by the load prevents the capacitor from retaining its charge. The capacitor-input filter is undesirable for applications which require a large current, because the peak current that must flow in the tubes to charge the input capacitor may damage the tubes or require

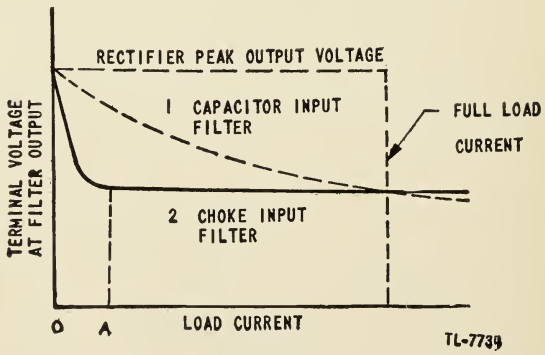

Figure 91. Effect of load on terminal voltage of capacitor and choke input filters.

the use of large, expensive tubes. Since the output voltage falls considerably as the load current is increased, this type of filter is said to have relatively poor regulation (fig. 91①). It may be used, however, where the load is light or absolutely constant.

(7) At no load the output voltage of the choke-input filter is nearly equal to the peak voltage of the sine wave applied. This high voltage can be obtained because, with no load being drawn, capacitor C_3 in figure 90② can be charged to the peak voltage. However, if only a small load current is drawn, the output voltage falls sharply to some lower value (fig. 91②). This sharp drop occurs because the inductance of L_2 prevents a surge of current from charging C_3 to the peak voltage, as happened to C_1 in figure 90①. However, as the load increases beyond the value indicated at A in figure 91, there is very little change in output voltage, except for the drop that takes place in the resistance of the two choke coils L_2 and L_3. Since the voltage at the output of this filter changes very little over a wide range of load, this circuit has good regulation. In practice, a fixed load which will draw a current of the magnitude A usually is put across the terminals of the filter to prevent the large change of voltage which takes place between no load and A.

e. Resistance-capacitance filter. (1) In some applications a resistor may be substituted for an inductor in a filter circuit. Since the filtering action of the circuit with the resistor is not as effective as that of an inductor, such a filter is used only where some ripple may be tolerated. A resistance-capacitance filter is not used where large load current must be supplied because of the excessive voltage drop that takes place across the filter resistor.

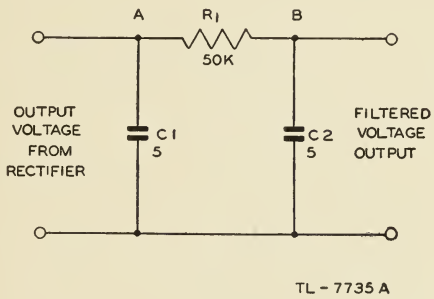

Figure 92. Resistance-capacitance filter.

(2) In figure 92, the capacitor C_1 is made large enough to have a very low impedance to the ripple frequency. The d-c component of the voltage at A sees an infinite impedance looking into C_1, and 50,000 ohms looking into R_1 in series with the load. The d-c component therefore drives a current through R_1. The ripple component of the voltage sees a very low impedance looking into C_1 and a relatively high impedance looking into R_1. Most of the current produced by the ripple voltage therefore passes through C_1. A little of this current passes through R_1 and a very small ripple voltage tends to appear at B. However, the capacitor C_2 offers a lower impedance to the ripple frequency than the load does, and most of the remaining ripple at B is shunted by C_2.

(3) The resistance-capacitance filter is used in oscilloscope power supplies. In other applications this type of filter is often used to keep the screen grid of a pentode at a constant potential, and as a decoupling network to isolate the variations of voltage at the plate of an amplifier.

f. Effect of frequency. Most power-supply units are designed for operation from a-c power lines whose frequency is 60 cycles per second. However, if the frequency of the input voltage is increased, the rectifier and its filter can be made smaller and lighter. The filters can become smaller because, as the frequency is increased, the reactance of a given capacitor decreases and the reactance of a given inductor increases. Therefore, much more effective filtering can be obtained with the same circuit elements. Similarly, filtering of the same effectiveness as at 60 cycles per second can be obtained with less inductance and capacitance when the power source is of high frequency. If less inductance can be used in the filter, smaller and lighter choke coils can be used. Another contributing factor is that transformers of the same ratio of transformation and power rating become smaller in size and lighter in weight as the frequency is increased. In order to save weight and space, radio and radar equipment for aircraft use is often designed for operation from an 800-cycle-per-second source.

30. VOLTAGE DIVIDERS. a. General. (1) A resistor almost always is placed across the output terminals of a rectifier power supply. The name applied to such a resistor depends on its principal use. If it serves the purpose of bleeding off the charge on the filter capacitors when the rectifier is turned off (as in the case of R_1 and R_2 in figure 83), the resistor is called a bleeder resistor. If it serves the purpose of applying a fixed load to a filter circuit to improve the voltage regulation of the power supply (as in the case of R_1 in figure 90②), it is called a load resistor. If leads are connected to the resistor at various points to provide a variety of voltages which are less than the terminal voltage, the resistor is called a voltage divider.

(2) In general, a resistor placed across the output terminals of a rectifier power supply may fulfill all of these functions. However, if the resistor is to be a bleeder resistor only, it usually has a very high resistance so that it will draw a negligible current from the rectifier. If the resistor is to serve as a load resistor, it should be of such a value that it will draw approximately 10 percent of the full load current. It must be of sufficient wattage rating to dissipate the heat produced by the current flowing through it while the circuit is energized.

b. Circuits. (1) A resistor which is used as a load resistor also may be used as a voltage divider because the current flowing through the

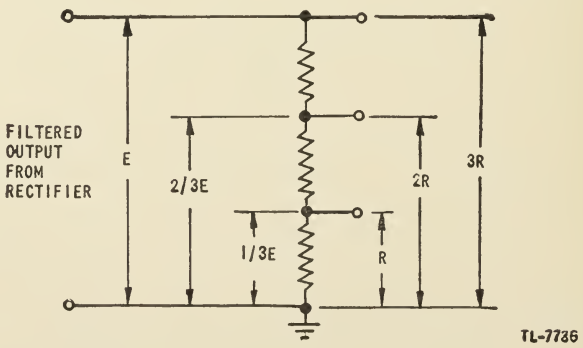

Figure 93. Simple voltage divider.

resistor produces a voltage drop across it equal to the impressed voltage. In figure 93, three similar resistors are connected in series. As long as no load is drawn from any terminal except the top or line terminal, the voltages across the resistors will divide proportionally to the resistance of each as shown.

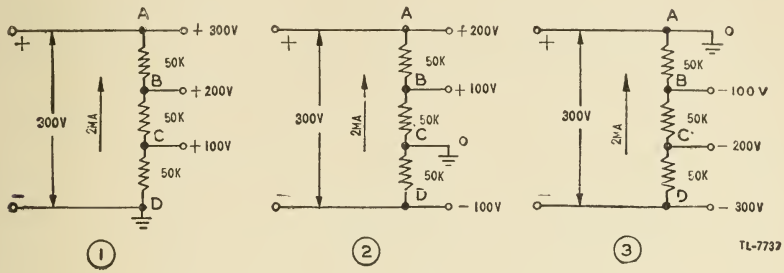

Figure 94. Effect of moving ground point on a voltage divider.

(2) It is common practice to ground one side of most circuits. Therefore ground potential is normally used as a reference for measurement of voltages as at point *D* (fig. 94①). If a rectifier and its filter are connected so that no parts of the power supply are grounded, it is possible to ground the circuit at any point without affecting the operation of the rectifier, providing the insulation of all parts is sufficient to withstand the voltage involved. Thus in figure 94②, point *C* is grounded and point *D* becomes negative with respect to ground. Such a circuit is frequently used to furnish both plate and bias voltages from the same power supply. In ③, point *A* is grounded and all voltages along the divider are negative with respect to ground. An important point to note, however, is that point *A* will always be *more positive* than point *B* so long as the power supply polarity is maintained as shown in the figures.

(3) It has been assumed in figures 93 and 94 that no load was attached to the divider except across the line terminals *A* and *D* and that voltages could be measured without drawing appreciable current. As soon as a load is attached to the divider at any intermediate terminals, the voltage division shown no longer is correct. This is because the resistance of the attached load forms a parallel circuit with the part of the divider across which it is placed, and therefore changes the total resistance between the terminals concerned.

(4) For example, in figure 95 a load of 150,000 ohms (150K) is placed across *BD* and a load of 50,000 ohms (50K) across *CD*. The resistance between *C* and *D* is first determined by Ohm's law for parallel resistance (sec. II), or—

$$R_{CD} = \frac{50K \times 50K}{50K + 50K} = 25K$$

To this is added the series resistance of the middle divider resistor: $25K + 50K = 75K$. The resistance across *BD* is then found by the parallel resistance rule, or—

$$R_{BD} = \frac{75K \times 150K}{75K + 150K} = 50K$$

The total resistance between *A* and *D* is then this resistance of 50*K*

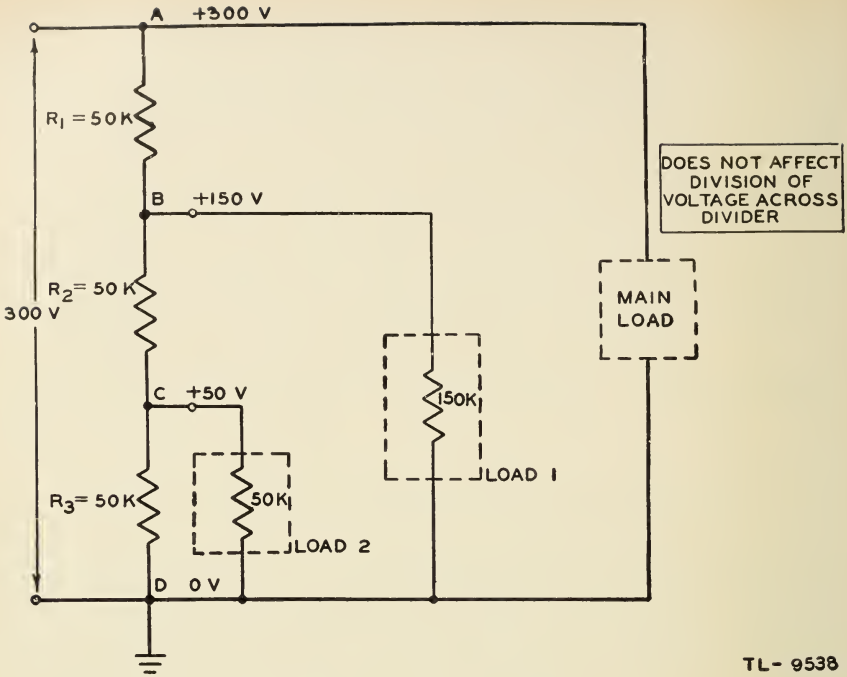

Figure 95. Effect of loads on voltage division.

plus the resistance of the first divider resistor, or: $50K + 50K = 100K$. The total current taken by the divider and its two loads is then the available voltage divided by this resistance, or—

$$I = \frac{300 \text{ volts}}{100K} = 3 \text{ milliamperes}$$

This current of 3 milliamperes flowing in the first divider resistor, R_1, produces an IR drop of 50K × 3 milliamperes = 150 volts. Therefore when loads No. 1 and No. 2 have the values as shown, this first resistor absorbs one-half of the available voltage instead of one-third as in the no-load condition of figure 94①.

(5) The 3-milliampere current divides at B and flows through load No. 1 and through R_2. Across load No. 1 there is: 300 volts — 150 volts = 150 volts. Then the current through load No. 1 is $\frac{150 \text{ volts}}{150K}$ = 1 milliampere and the current in R_2 is 3 milliamperes — 1 milliampere = 2 milliamperes. The 2 milliamperes flowing in R_2 again produce an IR drop which is: 50 K × 2 milliamperes = 100 volts. Thus the voltage remaining to be applied across CD is: 150 volts — 100 volts = 50 volts. The current in load No. 2 is then $\frac{50 \text{ volts}}{50 \text{ volts}}$ = 1 milliampere, leaving 2 milliamperes — 1 milliampere = 1 milliampere to flow through the last divider resistor, R_3. As a check, the IR drop across R_3 can be found: 50K × 1 milliampere = 50 volts. Since this is the same as the voltage previously determined across CD, the value of current must have been correct.

(6) Instead of a voltage of 200 volts at B and 100 volts at C as in figure 94①, the voltage is now 150 volts at B and 50 volts at C with the loads of values as shown in figure 95. Other values of loads will give correspondingly different values of voltage at B and C. Thus it can be seen that the voltage appearing across the intermediate terminals of a voltage divider will divide proportionally to the values of the divider resistors only as long as no appreciable load drawn is from these terminals. Under loaded conditions the voltages at these terminals will have various values, depending upon the resistance of the loads. A voltage divider must therefore be designed for the particular load conditions under which it is to operate.

31. VOLTAGE REGULATORS. a. General. (1) A device which causes the output voltage of a power supply to remain constant, in spite of large changes of load current drawn from the power supply or changes in the input voltage, is called a voltage regulator. Electronic voltage regulators most frequently are used with rectifier power supplies. Other types of regulators generally are used with rotating machines.

(2) The regulator which is used to stabilize the output voltage of a rectifier usually takes the form of a variable resistance in series with the output. This variable resistance and the load resistance form a voltage divider. The variable element is controlled so that the voltage across the load is held constant.

(3) Figure 96 shows a simple circuit which demonstrates this principle. The variable resistor R and the resistance of the load comprise a voltage divider which is connected across the rectifier output terminals. All the load current passes through R and causes a voltage drop across it. If the rectifier output voltage rises, the voltage across the load

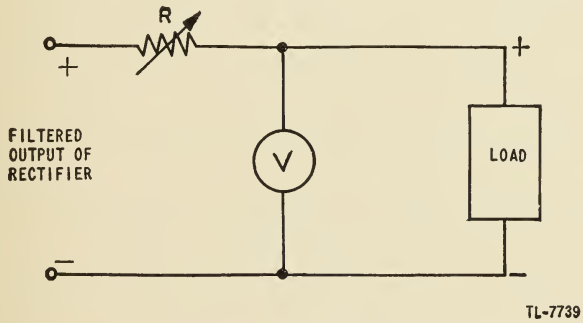

Figure 96. Fundamental voltage regulator.

rises in proportion. To counteract this rise, the resistance of R is increased so that a greater proportion of the available voltage appears across R. The voltage across the load therefore is held constant if the resistance of R is increased sufficiently to neutralize the increase of rectifier output. If the resistance of the load increases, a greater fraction of the available voltage appears across the load. Therefore, the resistance of R must be increased in order to hold the voltage across the load constant.

(4) In the system shown in figure 96, the resistor R must be varied manually according to the reading of the voltmeter. If the voltmeter

reading increases, R must be increased; if the voltmeter reading decreases, the resistance of R must be decreased. This same type of action must take place in all of the voltage regulators that are to be discussed. The more complicated circuits which follow are more desirable than this simple circuit because they are more accurate and can respond more quickly to changes.

(5) All voltage regulators which are discussed in this volume are essentially voltage dividers. The variable voltage drop may be supplied in many ways, but the action of most of the circuits as a whole may be explained in terms of the simple circuit shown in figure 96.

b. Amperite voltage regulator. (1) A regulator tube which consists of an iron wire enclosed in a hydrogen-filled envelope is called an Amperite tube or ballast tube.

(2) An Amperite regulator circuit is shown in figure 97. The resistance of the iron wire in the ballast tube varies as the current through it changes. If the current is large, the wire gets hot and has a high resistance. Thus the variable resistance of the Amperite tube can be used to compensate for changes in the voltage of the rectifier over a fairly wide range. If the output voltage tends to increase, more current

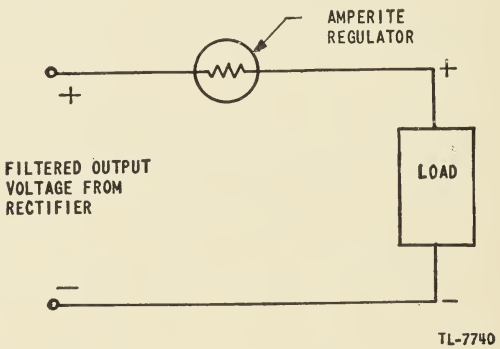

Figure 97. Amperite regulator circuit.

flows through the ballast tube. The resistance of the tube then increases and more of the voltage drop takes place across the tube. Therefore, the voltage across the load remains nearly constant.

(3) The Amperite regulator does not regulate the voltage if the load changes. If the load increases, more current is drawn from the power supply and the load voltage falls. In addition, the greater current drawn causes the resistance of the Amperite to increase, and the load voltage is made even lower by this additional drop.

(4) Although the ballast tube may be used in this manner to regulate voltage, it is generally inserted in series with several elements through which it is desired to maintain a constant current. In such applications, the resistance of the amperite changes to counteract the effect of changing voltage across the circuit. One frequent application of this type of regulation is in circuits where the filaments of several tubes are connected in series.

c. Glow-tube regulator. (1) In a glow-discharge tube, such as the neon-glow tube, the voltage across the tube remains constant over a

fairly wide range of current through the tube. This property exists because the degree of ionization of the gas in the tube varies with the amount of current that the tube conducts. When a large current is passed, the gas is very highly ionized and the internal impedance of the tube is low. When a small current is passed, the gas is lightly ionized and the internal impedance of the tube is high. Over the operating range of the tube, the product (IR) of the current through the tube and the internal impedance of the tube is practically constant.

(2) A simple glow-tube regulator is shown in figure 98. The load current and the current that flows in the neon-glow tube both pass through the series resistor R. If the supply voltage drops, the voltage across the neon tube tends to drop. Instead, the gas in the neon tube deionizes slightly and less current passes through this tube. The cur-

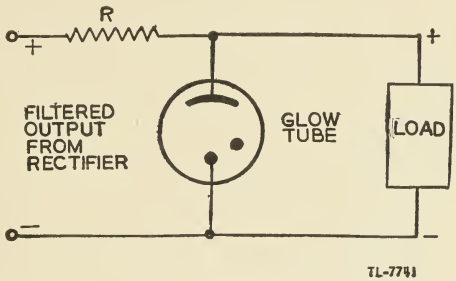

Figure 98. Glow-tube voltage regulator.

rent in R is decreased by the amount of this current decrease in the tube. Since the current through R is less, the voltage drop across R is less. If the resistor is of the proper value relative to the load and to the glow tube which is used, the voltage across the load is held nearly constant. In any case, the value of R must not be so large that the neon tube. Since the current through R is less, the voltage drop across R is less.

(3) Glow tubes such as the 874, the VR–75–30, the VR–105–30, and the VR–150–30 are designed to operate at different useful values of

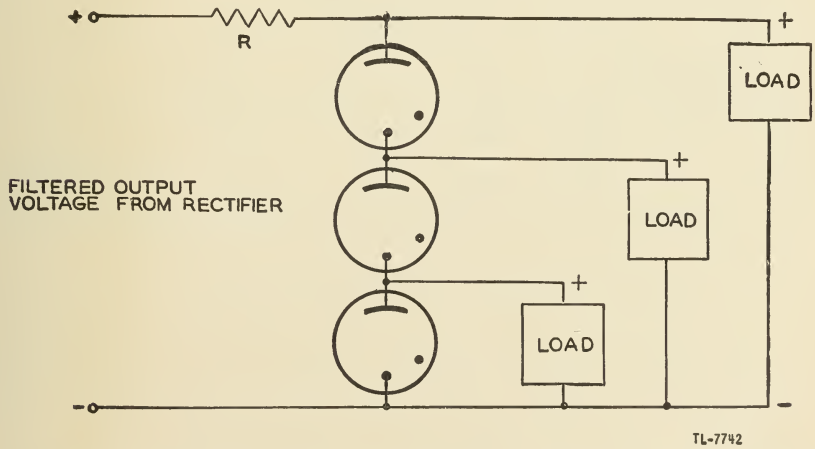

Figure 99. Use of several glow tubes in series to obtain stabilized high voltage.

voltage. The letters "VR" refer to the tube's function as a voltage regulator. The first number indicates the constant terminal voltage for which the tube is designed. The second number indicates the maximum permissible current in milliamperes which can be drawn through the tube.

(4) In applications where a regulated voltage in excess of the maximum rating of one glow tube is required, two or more may be placed in series (fig. 99). This permits several regulated voltages with small current drains to be obtained from a single rectifier power supply.

(5) The voltage required to cause ionization of the glow tubes when the circuit first is energized is approximately 30 percent greater than the operating terminal voltage. The voltage quickly drops to the operating value as the tube begins to conduct. In order to maintain stable operation, the tubes should be operated within their maximum and minimum current ratings. In the case of VR–75–30, VR–105–30, and VR–150–30 tubes, a minimum current of 5 milliamperes should flow through the tube, and the maximum current should be kept well below the rated 30 milliamperes.

d. Simple vacuum-tube regulator. (1) A vacuum tube may be considered as a variable resistance. When the tube is conducting a direct current, this resistance is simply the plate-to-cathode voltage divided by the current through the tube and is called the d-c plate resistance R_p. For a given plate voltage the value of R_p depends upon the tube current, which in turn depends upon the grid bias.

(2) The variable resistor R of figure 96 can be replaced by a vacuum tube (fig. 100) since the vacuum tube is also a variable resistance. The effective resistance of V_1 in the circuit is established initially by the bias on the tube. Assume that the voltage across the load is at the desired value. Under this condition, the cathode is positive relative to ground

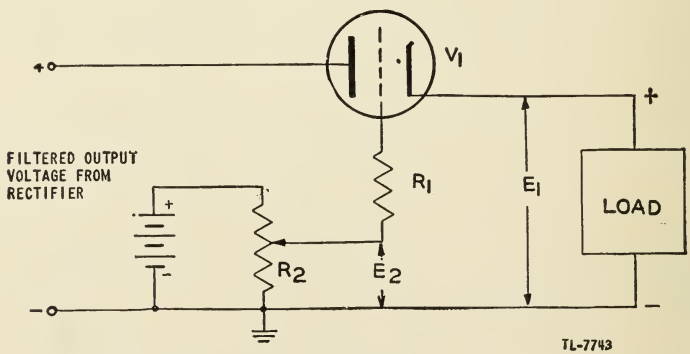

Figure 100. Simple vacuum-tube voltage regulator.

by some voltage E_1. The grid can be made positive relative to ground by a voltage E_2 which is less than E_1. The potentiometer R_2 is adjusted until the bias, which is $E_1 - E_2$, is sufficient to allow V_1 to pass a current exactly equal to the load current. With this bias, the resistance of V_1 is established at the proper value to reduce the rectifier output voltage to the desired load voltage.

(3) If the rectifier output voltage increases, the voltage at the cathode of V_1 tends to increase. As E_1 increases the bias on the tube increases and the effective plate resistance of the tube becomes greater. Consequently, the voltage across V_1 is greater. If the circuit is properly designed, the increased voltage drop across V_1 is approximately equal to the increase of voltage at the input to the regulator. Thus the load voltage remains essentially constant.

(4) The resistor R_1 is used to limit the grid current. This is necessary in this particular circuit because the battery is not disconnected when the power is turned off. However, the battery can be eliminated from the circuit by the use of a glow tube to supply a fixed bias for the grid of the tube (fig. 101). In this circuit, the grid voltage is held constant by the glow tube V_2. The action of the circuit is exactly the same as the action of the circuit shown in figure 100.

(5) The output voltage of the simple voltage regulators shown in figures 100 and 101 cannot be absolutely constant. As the rectifier output voltage increases, the voltage at the cathode of V_1 must rise slightly if the regulator is to function. However, if the characteristics of the tube V_1 are carefully chosen, the rise of load voltage is not large.

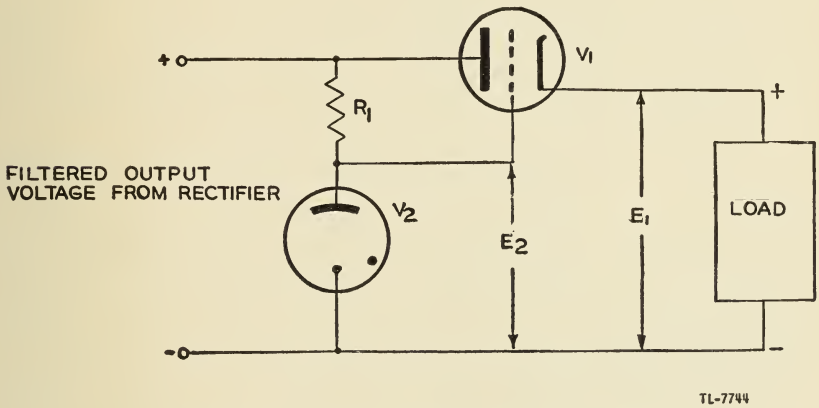

Figure 101. Simple voltage regulator circuit.

(6) The voltage regulators of figures 100 and 101 are greatly superior to those discussed before, because the amplification of tube V_1 permits operation of the regulator on small variations of load voltage, whether the variations are caused by supply-voltage fluctuations or changes in load. For example, in figure 101, if the load resistance decreases, the load current increases and lowers the voltage E_1 by the increased voltage drop in V_1. The cathode of V_1 therefore becomes less positive than before, and the bias on V_1 is decreased, since this bias is made up of $E_1 - E_2$. The decrease in bias lowers the resistance of V_1 sufficiently to allow the load voltage to rise to normal. The result is that the total resistance across the power source is less, but the voltage division is changed to provide the desired voltage across the load.

e. Improved voltage regulator. (1) A very stable voltage regulator can be made by taking advantage of the high amplification possible with a pentode vacuum tube. This voltage regulator (fig. 102) produces an out-

put voltage which is independent of fluctuations in the a-c supply and changes in load over a wide range.

(2) The output voltage of this regulator is developed across the bleeder resistors R_3, R_4, and R_5 in parallel with the resistance of the load. These resistors make up the resistance of one part of the total voltage divider. The other resistance, through which all of the load current must flow, is the plate-to-cathode resistance of vacuum tube V_1. The other elements in the circuit are used to control the resistance of V_1 and thereby to maintain a constant voltage across the load.

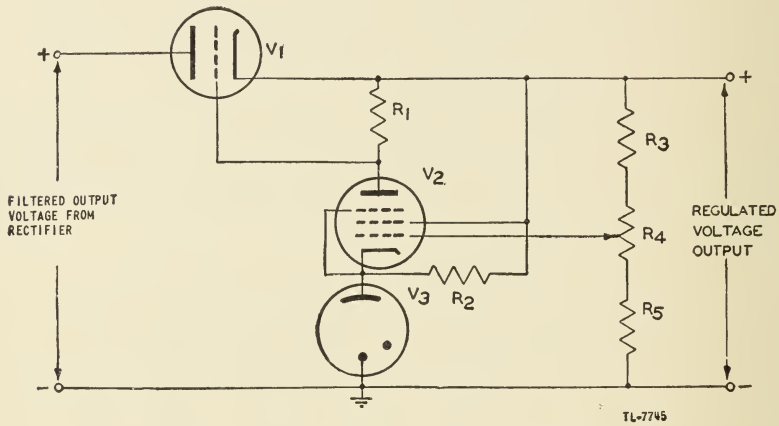

Figure 102. Improved voltage regulator.

(3) The plate voltage of V_2 is the regulated voltage output of the regulator. The potential of the cathode of V_2 is held at a constant positive value by the glow tube V_3. The grid potential of V_2 is a voltage selected by the potentiometer R_4. This potentiometer is set so that the grid voltage is less positive than the cathode by an amount (the bias) which causes V_2 to pass a certain plate current. This plate current flows through the plate load resistance R_1 and causes a drop across it. The magnitude of the voltage across R_1 is the bias on tube V_1. Therefore, the adjustment of the potentiometer R_4 establishes the normal resistance of V_1. This adjustment is used to set the value of load voltage which the regulator is to maintain.

(4) If the load voltage tends to rise, whether from a decrease in the load current or from an increase in the input voltage, the voltage on the grid of V_2 also tends to rise (become less negative), the cathode voltage remaining practically constant. V_2 then conducts more current, because the bias is smaller. A greater current flows through R_1, which causes a greater voltage drop across this resistor. This voltage, which is the bias voltage for V_1, causes the plate resistance of V_1 to increase. A larger portion of the available voltage appears across the higher resistance of V_1, and the load voltage remains practically constant. The action is similar if the load voltage tends to fall.

(5) A pentode is used for V_2 because of the high amplification possible with this type of tube. The use of such a tube makes the output voltage much more constant since small variations of load voltage are amplified sufficiently to cause operation of the circuit.

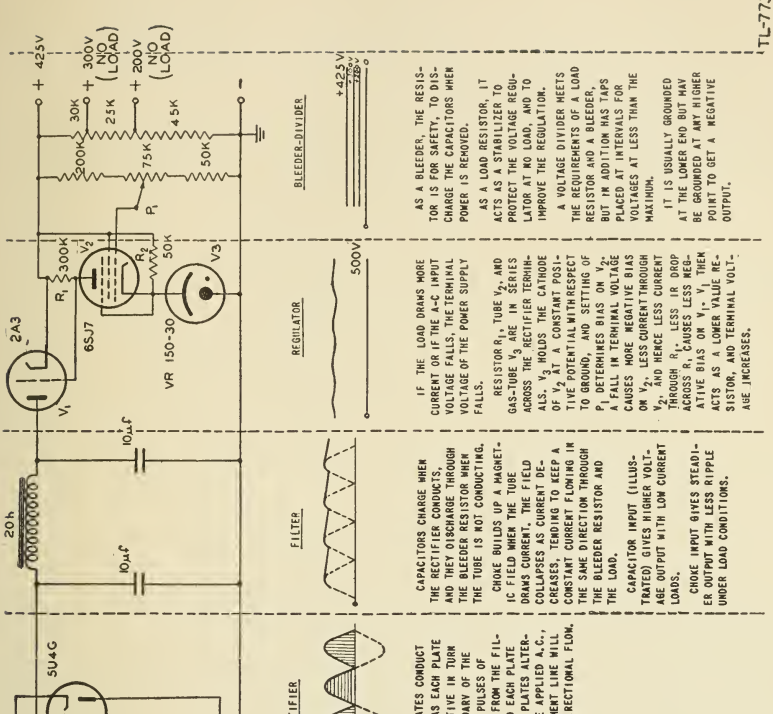

Figure 103. Full-wave rectifier showing filter, regulator, and voltage divider.

(6) The anode of the glow tube V_3 is connected to the cathode of V_2 and to the regulated voltage output through resistor R_2. It is necessary to connect the glow tube to the $B+$ in this way in order to cause the gas in this tube to ionize when the power supply is first turned on.

(7) All of the load current must pass through V_1. For this reason, this tube must be capable of passing a large current. In some regulators a single tube does not have sufficient capacity to pass the required current. In such cases, several identical tubes may be put in parallel.

(8) The regulator shown in figure 102 is used very widely to stabilize the output voltage of rectifier power supplies. Because of its excellent sensitivity to small changes of input voltage, this regulator is very effective in removing ripple from the output of rectifier power supplies. The regu-

lator, then, serves also to filter the output of a rectifier, although the conventional filter systems usually are used in connection with a regulator.

(9) Figure 103 is a complete rectifier-power-supply circuit, showing the power transformer, the rectifier tube, the filter circuit, the voltage divider, and the voltage regulator. The figure summarizes much of the foregoing power supply discussion.

f. Voltage stabilizer. (1) A circuit which is designed to remove from a rectifier output the fluctuations that may occur in an a-c line is called a stabilizer. It differs from a regulator in that it does not control the aver-

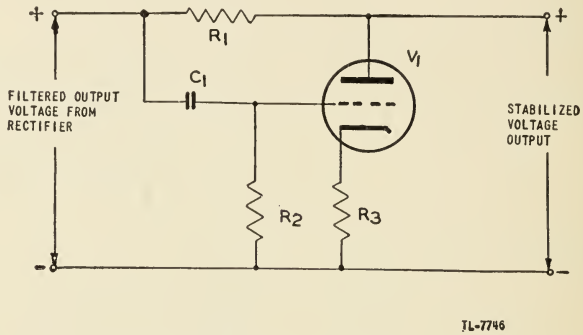

Figure 104. Voltage-stabilizer circuit.

age value of the output voltage, but it does remove the a-c components superimposed on the direct voltage.

(2) One type of voltage stabilizer is shown in figure 104. Slow changes in the rectifier output voltage do not affect this circuit because such voltages cannot pass through the coupling capacitor C_1. However, ripple voltages and transient voltages are coupled to the grid of V_1. If the transient attempts to raise the rectifier output voltage, the grid of V_1 is driven in a positive direction, causing V_1 to pass a larger current. The increased drop across the plate load resistor caused by the increased plate current cancels the rise of voltage caused by the transient. Thus, the voltage remains relatively constant. In the same way, a negative swing of input voltage reduces the current flowing in V_1 and in R_1, thereby stabilizing the output voltage of this circuit.

(3) If the amplification of the tube is 1, a 10-volt rise at the grid causes a 10-volt drop at the plate. This property makes this circuit very useful in applications where the a-c supply voltage is likely to fluctuate badly, or where it is impractical to include an adequate filter to eliminate ripple from the output.

32. ELECTRONIC INVERTER CIRCUITS. a. General. A circuit which converts a direct voltage to an alternating voltage is called an inverter. Such circuits are used in applications where the primary source of power is direct current. Because a direct voltage cannot be changed by transformer action, it is convenient to convert the d-c supply to alternating current so that the a-c output from the inverter then may be applied to transformers to supply any desired voltage.

b. Principles of operation. (1) An inverter circuit is fundamentally an oscillator capable of delivering relatively large amounts of power. One possible circuit is shown in figure 105.

(2) When the d-c voltage is first applied, the electron flow is approximately equal through both branches of a parallel circuit formed by tubes V_1 and V_2 in series with corresponding halves of the primary T_2. The voltage across the halves of this primary will then be equal and opposite

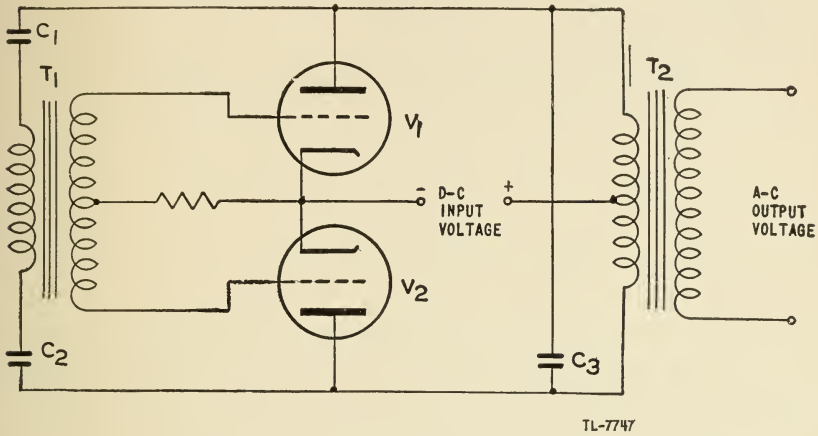

Figure 105. Inverter circuit.

and no voltage will appear across C_3. However, any slight transient or inequality of current creates a slight voltage across C_3 and also across the series circuit comprising C_1, the primary of T_1, and C_2. This small voltage induces a voltage across the secondary of T_1, which is applied to the grids of V_1 and V_2. V_1 and V_2 amplify the small voltage and apply the amplified voltage to C_3 in the proper phase to add to the original unbalance.

(3) The process repeats until one of the tubes reaches saturation and the other is cut off. At this instant, the voltage across C_3 and the primary of T_2 is maximum. C_3 and the primary of T_2 form a parallel resonant circuit and the discharge of C_3 through the primary of T_2 produces oscillations in the resonant circuit at a frequency which is determined by the value of C_3 and the effective inductance of the primary of T_2. These oscillations induce an alternating voltage of the same frequency in the secondary of T_2. This is the output of the inverter. The energy coupled out of the resonant circuit by the secondary of T_2 must be supplied through V_1 and V_2 from the d-c source. Energy is also lost in the resistance of the transformer windings and the wiring resistance. This energy must also be supplied from the d-c source. This is accomplished by coupling some of the resonant circuit voltage to the grids of V_1 and V_2 through C_1, T_1, and C_2. The voltage is fed back in the proper phase to cause V_1 and V_2 to conduct every alternate half cycle so that the direct-current input is fed to the resonant circuit at just the right moment to add to the instantaneous oscillating energy. For example, suppose the energy in the resonant circuit is charging C_3 positive. The changing voltage is impressed across the primary of T_1 and its secondary is connected so that the voltage is a negative-going voltage on the grid of V_1 and a positive-going voltage on the grid of V_2. V_1 conducts less and V_2 conducts more. Therefore the plate of V_1 is made more positive and the plate of V_2 more negative. The d-c source thus is connected to C_3 to aid the charging

of C_3 by supplying energy at the instant it is being charged by the energy in the resonant circuit. When this energy is next discharged into the primary of T_2, it is available as output energy at the secondary of T_2. The energy supplied by the direct-current input will be largely determined by the energy drawn from the alternating-current output. The output of this inverter is very nearly a sine wave as a result of the parallel resonant properties of the circuit.

SECTION VI

AMPLIFIER AND OSCILLATOR CIRCUITS

---

33. CLASSIFICATION OF AMPLIFIERS. a. General. An amplifier is a device consisting of one or more vacuum tubes and associated circuits, employed to increase the strength of a signal. A small input voltage, applied between the grid and cathode of a triode, is very effective in controlling the flow of current from a local battery in the plate circuit. Vacuum-tube grid-voltage changes are μ (mu) times as effective as plate-voltage changes in changing the plate current, where μ is the *amplification factor* of the tube. In practical operation, however, certain input and output circuits must be used in conjunction with the tube. The gain per stage of the resistance-capacitance-coupled amplifier is always less than μ, whereas the gain of a stage of transformer-coupled amplifier may be greater or less than μ, according to the step-up or step-down ratios of the transformers. The output waveshape of an amplifier may or may not be distorted. If the amplifier is designed to produce distortion, the output waveshape is not similar to the input but may be varied according to its intended purpose.

b. According to use. (1) When classed according to the type of service, amplifiers are divided into two general groups: voltage amplifiers and power amplifiers. A voltage amplifier is concerned primarily with the ratio of the alternating output voltage derived from the plate circuit to the alternating input voltage applied to the grid circuit rather than with the power which may be taken from the output circuit. The load resistance for voltage amplification must be high to develop a large voltage across its terminals.

(2) A power amplifier is designed to deliver power to the load circuit while the voltage amplification remains incidental. The ratio of output power to a-c power consumed in the grid circuit (driving power) is called the power amplification of the circuit. The load impedance for power amplification is selected either to give maximum power with minimum distortion or to give a desired value of plate efficiency. Plate efficiency is the ratio of output power to d-c input power to the plate (plate current times plate voltage). Plate efficiency is generally low in amplifiers designed primarily for minimum distortion, but may be quite high where distortion is permissible.

c. According to bias. Amplifiers are divided into groups according to the work they are intended to perform, as related to the operating condi-

tions necessary to accomplish the purpose. This grouping is made according to the portion of the cycle during which plate current flows as controlled by the bias on the grid.

(1) In *Class A,* the grid bias and alternating grid voltages are such that plate current in a specific tube flows throughout the entire electrical cycle. The chief characteristics are minimum distortion, low power output for a given size of tube, and a high power-amplification ratio. The plate efficiency is relatively low (20 to 35 percent).

(2) In *Class B,* the grid bias is approximately equal to the cut-off value so that the plate current is approximately zero when no exciting grid voltage is applied, and so that the plate current in a specific tube flows for approximately one-half of each cycle when an alternating grid voltage is applied. Class B amplifiers are characterized by medium power output, medium plate efficiency (50 to 60 percent), and a moderate ratio of power amplification. Since the alternating component of the plate current is proportional to the amplitude of the exciting grid voltage, the power output is proportional to the square of the exciting grid voltage.

(3) In *Class AB,* the grid bias and alternating grid voltages are such that plate current in a specific tube flows for appreciably more than half but less than the entire electrical cycle. The advantages of these amplifiers are low distortion at moderate signal levels and medium efficiency at high levels.

(4) In *Class C,* the grid bias is appreciably greater than the cut-off value so that plate current in each tube is zero when no alternating grid voltage is applied, and so that plate current flows in a specific tube for appreciably less than one-half of each cycle when an alternating grid voltage is applied. Since the alternating component of the plate current is directly proportional to the plate voltage, the output power is proportional to the square of the plate voltage. Other characteristics inherent in Class C operation are high plate efficiency (70 to 75 percent), high power output, and low power-amplification ratio.

d. According to frequency response. Vacuum-tube amplifiers may be classified further according to the frequency range over which they operate. These ranges, in general are audio-frequency (a-f), intermediate-frequency (i-f), radio-frequency (r-f), and video-frequency (or pulse) amplifiers. Audio-frequency amplifiers may be transformer-coupled, impedance-coupled, or resistance-coupled. Video-frequency amplifiers are usually resistance-coupled amplifiers but their gain characteristics must be flat over a very wide frequency range. Intermediate- and radio-frequency amplifiers are designed ordinarily for tuned-circuit coupling, although in actual operation they may resemble either the transformer-coupled or the impedance-coupled circuit.

34. DISTORTION IN AMPLIFIERS. a. General. Three types of distortion that may occur in amplifiers are frequency distortion, phase distortion, and amplitude or nonlinear distortion. In radar, distortion is frequently desirable in circuits which are used to produce the several special waveshapes that are necessary. On the other hand, certain amplifiers used in radar are designed to have much less distortion of all three types than is permissible in radio.

b. Frequency distortion. Distortion that occurs when some frequency components of a signal are amplified more than others is known as fre-

quency distortion. Figure 106 illustrates frequency distortion of a signal consisting of a fundamental and a third harmonic. After passing through a two-stage amplifier which introduces frequency distortion, only the

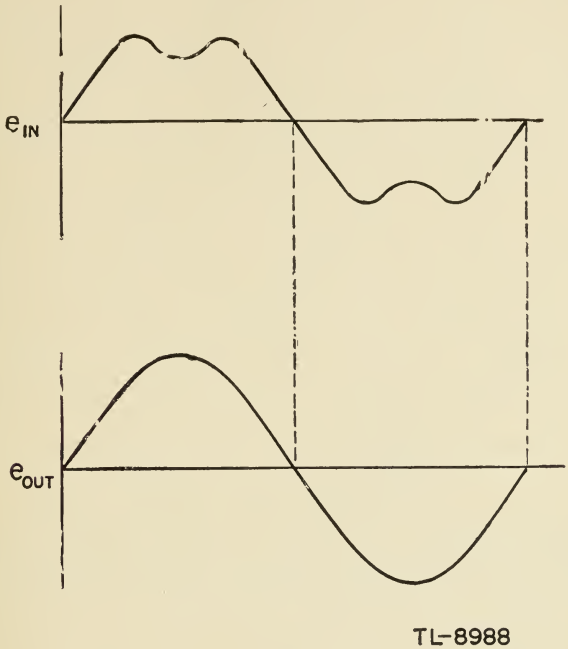

Figure 106. Frequency distortion.

fundamental has been amplified and the third harmonic component does not appear in the output. Frequency distortion may occur at low frequencies if the coupling capacitor between stages is too small, and therefore presents a high series impedance to the low-frequency components of a signal. Distortion also occurs at high frequencies as a result of the shunting effect of the distributed capacitances in the circuit. Ways of reducing the effects of frequency distortion will be discussed in the study of video amplifiers.

c. Phase distortion. In figure 107 an input signal consisting of a fundamental and a third harmonic is passed through a two-stage amplifier. Although the amplitudes of both components are increased by identical ratios, the output waveshape is considerably different from the input because the phase of the third harmonic has been shifted with respect to the fundamental. This is known as phase distortion, and it is caused principally by the coupling circuits between the stages of the amplifier. Most coupling circuits shift the phase of a sine wave, but this has no effect on the shape of the output. However, when more complex waveshapes are amplified, each component frequency of the waveshape may be shifted by different amounts so that the output is not a faithful representation of the input waveshape. Special coupling circuits used in video amplifiers minimize phase distortion.

766812°—47——8

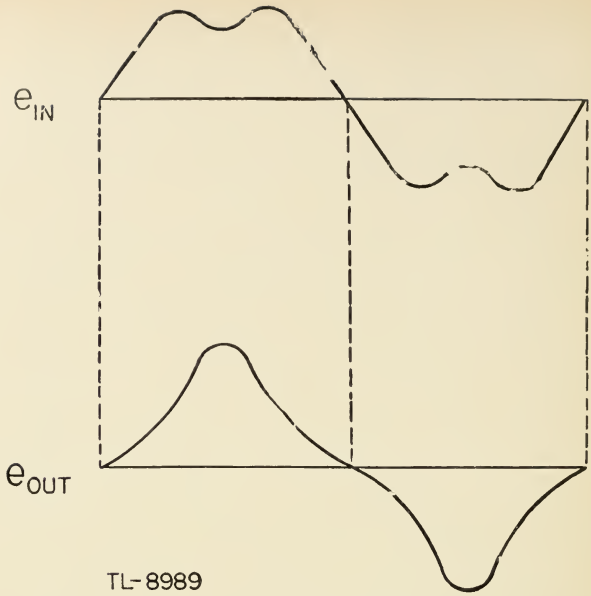

Figure 107. Phase distortion.

d. Amplitude distortion. If a signal is passed through a vacuum tube that is operating on any nonlinear part of its characteristic, amplitude

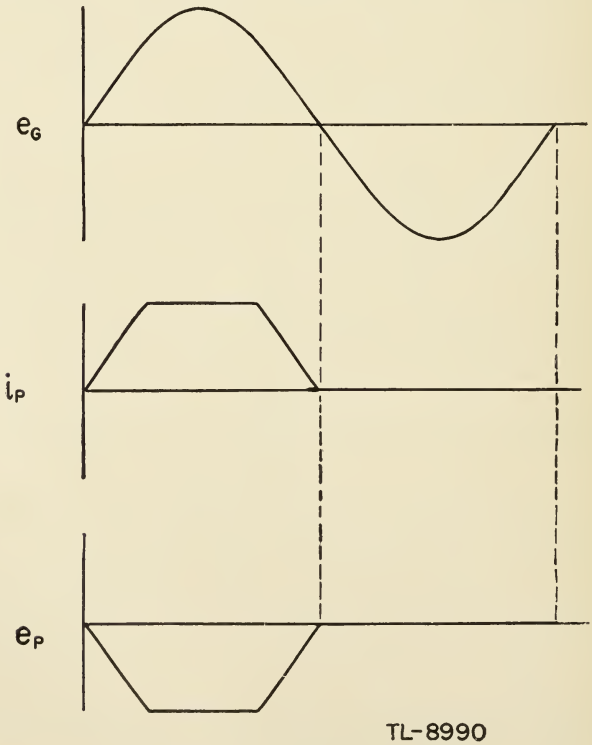

Figure 108. Amplitude distortion.

distortion will occur. In this region any change in grid voltage does not result in a change in plate current which is directly proportional to the change in grid voltage. For example, if an amplifier is overdriven by applying a signal that drives the tube to cut off and to plate-current saturation, the resultant signal (fig. 108) is distorted in amplitude, since the tube operates over a nonlinear portion of its characteristic. Below cut-off, no matter how far the grid goes negative, the current through the tube is zero; and beyond plate-current saturation, no matter how far positive the grid is driven, no increase of plate current is possible. Amplitude distortion can be avoided by operating amplifier tubes well within the linear region of their characteristics. Such operation is called Class A.

35. COUPLING METHODS. a. General. A single stage of voltage or power amplification normally is not sufficient for radio or radar applications. To obtain greater gain, several stages must be connected together. Since the output of one stage becomes the input of the next in a continuous

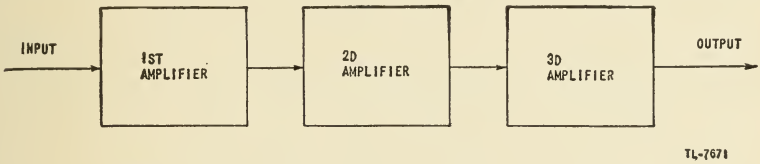

Figure 109. Cascade amplifier—schematic arrangement.

flow through the series of stages, this arrangement is called a cascade amplifier (fig. 109). A cascade amplifier is designated by the type of coupling used from one tube to the next. There are a number of methods each having certain advantages and disadvantages. The choice of method depends upon the needs of the particular circuit. The basic methods are:

(1) Resistance-capacitance coupling.
(2) Impedance coupling.
(3) Transformer coupling.
(4) Direct coupling.

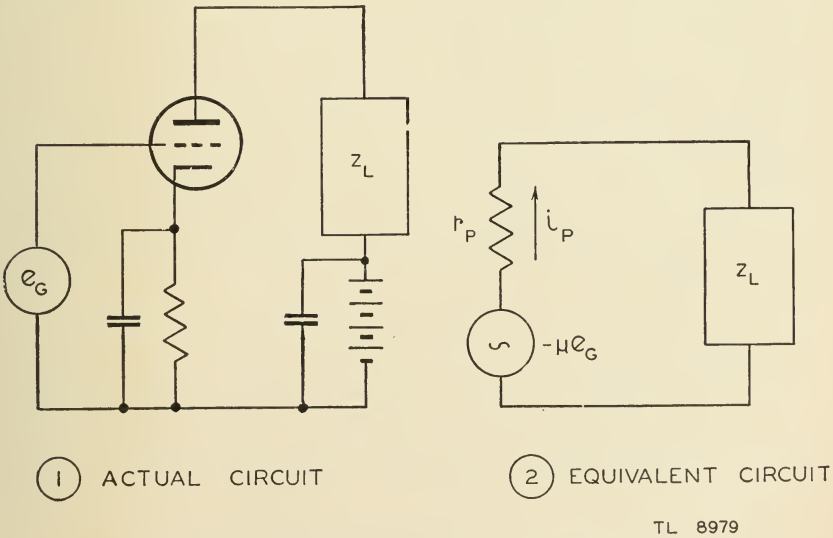

Figure 110. Equivalent circuit of vacuum-tube amplifier.

b. Equivalent circuit of vacuum-tube amplifier. (1) The variations produced in the plate current of a vacuum tube by the application of a signal voltage to the control grid are exactly the same variations that would be produced in the plate current by a generator developing a voltage of $-\mu e_G$ acting inside the tube in a circuit consisting of the tube plate resistance in series with the load impedance. The effect on the plate current of applying a signal voltage e_G to the grid is therefore exactly as though the plate-cathode circuit were a generator developing a voltage $-\mu e_G$ and having an internal resistance equal to the plate resistance of the tube. Thus the amplifier circuit of figure 110① can be represented by the equivalent circuit of figure 110②. The minus sign on the equivalent generator voltage is used only to indicate that this voltage is of opposite polarity to the signal voltage e_G, as explained in paragraph 22*e*.

(2) Application of Kirchoff's laws to this simple series circuit shows that the plate current which flows is

$$i_P = \frac{-\mu e_G}{r_p + Z_L}$$

This current must flow through the load impedance, so that the output voltage of the amplifier may readily be shown to be

$$\text{Output voltage} = i_P Z_L = \frac{-\mu e_G Z_L}{r_p + Z_L}$$

It is apparent from this expression that the output voltage of an amplifier is not simply μ times the applied signal. Since any vacuum tube has internal resistance, called plate resistance, only a portion of the equivalent generator voltage is available across the external load. It is very often useful to consider that the plate resistance and the load impedance make up a voltage divider across which the voltage generated within the tube is applied.

(3) The equivalent circuit of the amplifier gives only those currents and voltage drops that are produced as a result of the application of a signal voltage on the amplifier grid. The actual currents and potentials existing in the plate circuit are the sum of the currents and potentials developed in the equivalent circuit and those existing in the amplifier when no signal is applied. Since the steady values that are present when no signal is applied are of no particular interest so far as the performance of the amplifier is concerned, it is usually unnecessary to superimpose them on the results calculated on the basis of the equivalent circuit. In particular, when the signal applied to the grid is an alternating voltage, as is usually the case, the equivalent circuit gives directly the alternating currents produced in the plate circuit by the signal voltage, which are the currents superimposed on the direct-current quantities present when no signal is applied.

(4) The equivalent circuit gives the exact performance of the vacuum-tube amplifier to the extent that the plate resistance r_P and the amplification factor μ, which are used in setting up the equivalent circuit, are constant over the range of variations produced in control-grid and plate voltages by the signal voltage. Hence, when the signal is small, the equivalent circuit is almost exactly correct because the changes produced by the signal are so small that the tube constants are substantially constant. As the signal voltage increases, the error involved in the equivalent circuit becomes larger. To obtain the *exact* behavior, the equivalent circuit must

be modified to take into account the effects introduced by the variation in the circuit constants.

c. Resistance-capacitance coupling. (1) One of the most widely used methods of connecting amplifier stages is resistance-capacitance coupling. These amplifiers are characterized by their relative cheapness, good fidelity over comparatively wide frequency ranges, freedom from picking up undesired currents from the a-c heater leads, and special suitability to pentodes and high μ triodes. Typical circuits of triode and pentode amplifiers are shown in figure 111, together with the names of the various circuit elements.

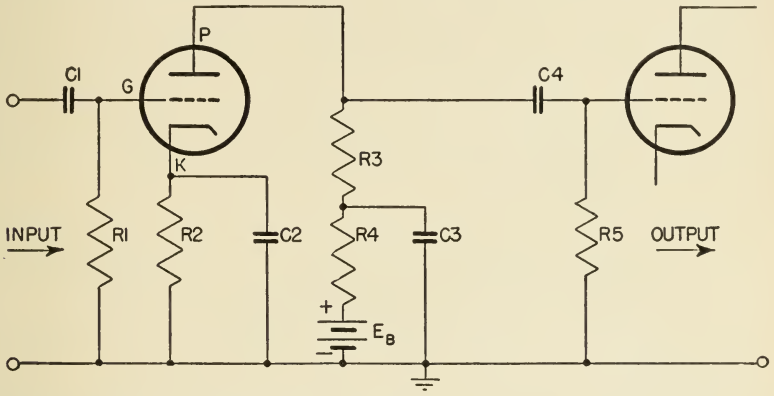

(1) TRIODE AMPLIFIER CIRCUIT.

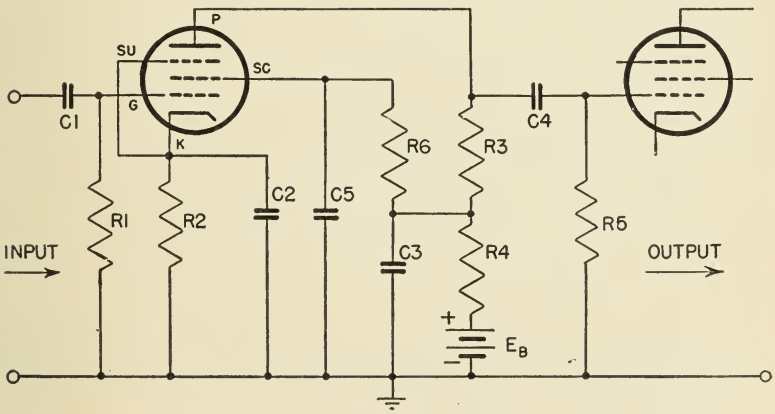

(2) PENTODE AMPLIFIER CIRCUIT.

R1= GRID-LEAK RESISTOR
R2=CATHODE BIAS RESISTOR
R3=PLATE LOAD RESISTOR
R4=PLATE DECOUPLING RESISTOR
R5=SECOND STAGE GRID RESISTOR
R6=SCREEN DROPPING RESISTOR

C1 =INPUT COUPLING CAPACITOR
C2=CATHODE BYPASS CAPACITOR
C3=PLATE SUPPLY BYPASS CAPACITOR
C4=OUTPUT COUPLING CAPACITOR
C5=SCREEN BYPASS CAPACITOR

TL-7672A

Figure 111. Typical resistance-capacitance-coupled amplifier.

(2) The d-c grid circuit includes G, R_1, R_2, and K. The a-c grid circuit includes G, R_1, C_2 and K. The d-c screen circuit includes S_c, R_6, R_4, E_B, R_2 and K. The a-c screen circuit includes S_c,C_5, C_2, and K. The d-c plate circuit includes P, R_3, R_4, E_B, R_2, and K. The a-c plate circuit includes P, R_3, C_3, C_2, and K.

(3) In order that the voltage gain be large, the plate resistor should have as high a value as possible. The higher its value, however, the greater the voltage drop across it and the lower the voltage between plate and cathode of the tube. There is a practical limit beyond which the load resistor cannot be raised since the plate current flowing through this resistor causes a voltage drop across it which must be subtracted from the available plate-supply voltage. If the plate-load resistor is too large, the voltage available at the plate of the tube becomes too low for proper operation of the circuit It then becomes necessary either to reduce the value of the plate-load resistor or to increase the plate-supply voltage. Figure 112 shows the d-c voltage distribution in the plate circuit of a tube.

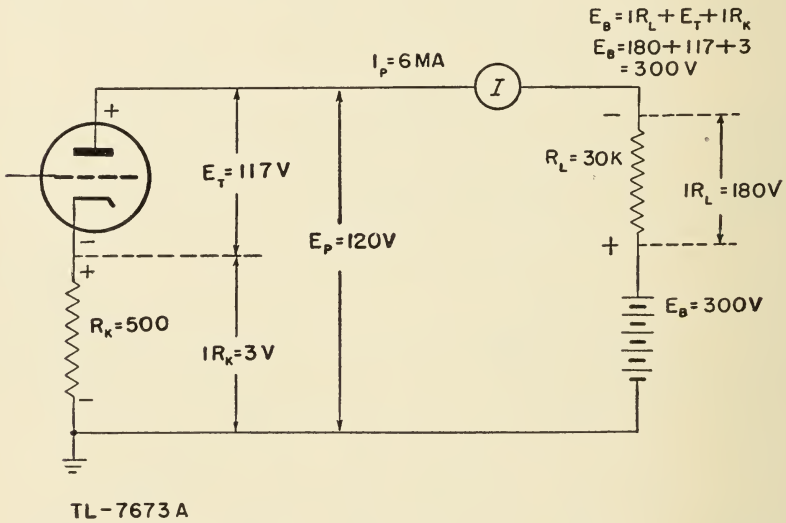

Figure 112. Plate-circuit voltage distribution.

(4) The screen resistor is of such value that subtraction of the voltage drop across it due to the screen current leaves the correct voltage for the screen. The value of the cathode resistor is determined by the biasing voltage needed for the grid of the tube.

(5) The decoupling or filter circuit C_3, R_4, (fig. 111) is used to keep the alternating current out of the power supply by bypassing it through C_3 and offering as high a resistance in R_4 as practicable for the B supply available. The cathode bypass capacitor C_2 must have as low a reactance as possible in comparison to the resistor R_2 for the frequencies to be amplified.

(6) A typical frequency-response curve for an R-C-coupled audio amplifier is shown in figure 113. It is seen that amplification is poor for the lower and higher frequencies. The amplification at high frequencies

falls off because of the shunting across the plate load resistor of the output capacitance C_o of one stage, the input capacitance of C_i of the succeeding stage, and the distributed capacitance C_D of the coupling net-

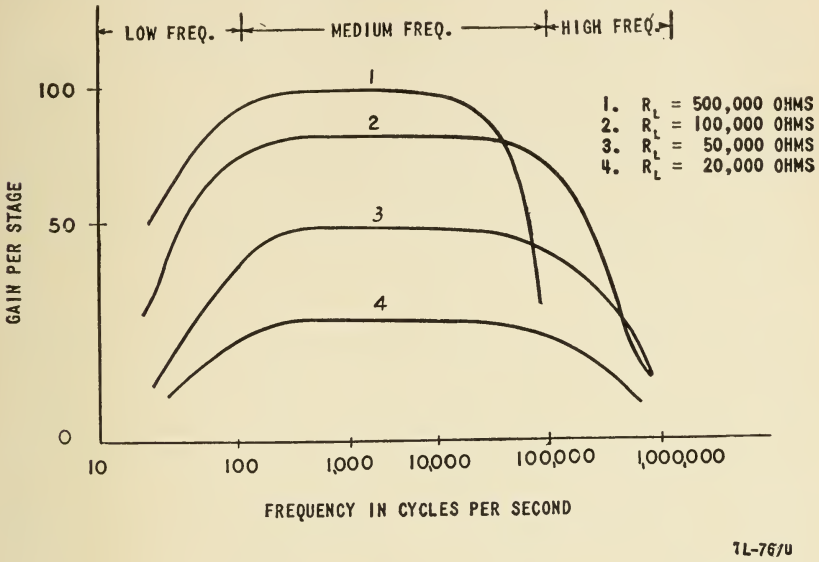

Figure 113. Variation of amplification with frequency in an R-C coupled amplifier for different values of plate-loading resistance.

work. The reduced gain at low frequencies is caused by the loss of voltage across the coupling capacitor. These capacitances are shown in the actual circuit (fig. 114①) and the equivalent circuit (fig. 114②) of an R-C-coupled amplifier.

(7) Figure 114② is known as the equivalent circuit of figure 114①. By substituting the tube and its biasing circuits for their a-c equivalents, alternating current calculations can be made by applying Kirchoff's and Ohm's laws. The a-c equivalent of the tube and its bias is a voltage equal to μe_G in series with a resistance r_p, the plate resistance of the tube.

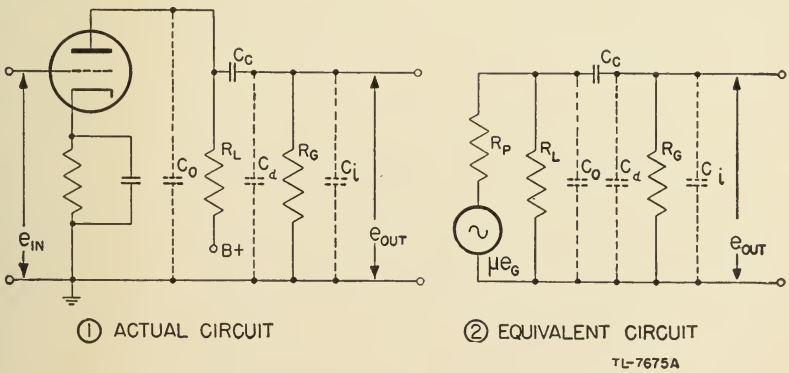

Figure 114. Single stage of R-C-coupled amplifier.

(8) The capacitance values of C_O, C_D, and C_i are very small and at low frequencies and mid-frequencies have no noticeable effect on the gain of the stage. Therefore, the low-frequency equivalent circuit for the amplifier stage in figure 114① is as shown in figure 115①. Here the IR_L drop developed across R_L appears across the series combination of C_C and R_G and the voltage across R_G is applied to the input of the following stage. As $X_C = \frac{1}{2\pi f C_C}$, the lower the frequency the higher becomes the reactance of the coupling capacitor. As the frequency goes down, more and more of the voltage developed across R_L appears across C_C, and less appears across the input to the following stage R_G. It is essential, then, to use as large a value of C_C as is necessary to offer negligible reactance at the lowest frequency desired to be amplified.

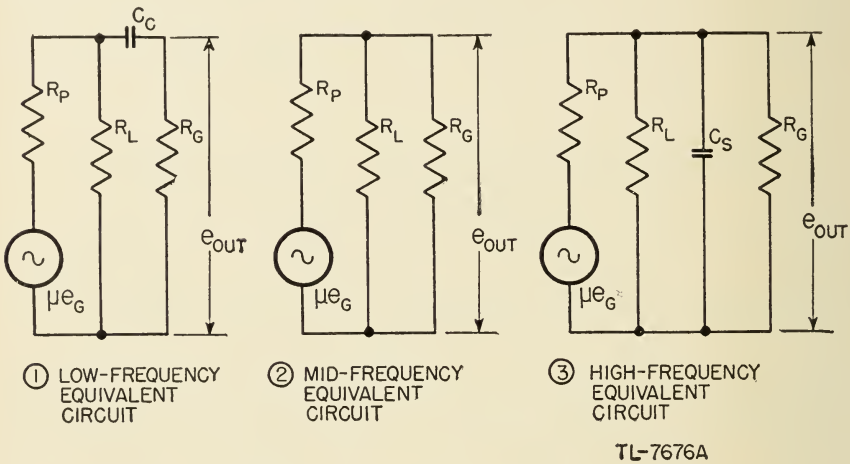

Figure 115. Low-, mid-, and high-frequency equivalent circuits of R-C-coupled amplifier stage.

(9) In the mid-frequency range the reactance of the coupling capacitor C_C is negligible and may be assumed to be a short circuit. The equivalent circuit then appears as shown in figure 115②. Here the amplification is independent of frequency and a flat response is expected.

(10) At high frequencies the interelectrode capacitance and distributed capacitance due to wiring become significant (C_S, fig. 115③). Since $X_{CS} = \frac{1}{2\pi f C_S}$, the reactance of C_S at low and middle frequencies is very high compared to R_L. However, as the frequency increases, the value of X_{CS} decreases, eventually reaching a value comparable to that of R_L. As the resultant complex impedance is lower and involves a phase angle, a lower voltage is developed across the load impedance to be applied to the input circuit of the following stage. Thus the gain of the stage becomes less as the frequency increases beyond the mid-frequency range. When it is desired to amplify high frequencies, tubes having a very low interelectrode capacitance, such as pentodes, are used to keep this shunt impedance high with respect to the load resistance R_L and the value of the plate-load resistor R_L is reduced so that its impedance to the highest frequency to be amplified remains appreciably

less than the impedance of the shunting capacitance. The lowering of the resistance of the load resistor reduces the over-all amplification of all the frequencies passing through the amplifier, but such adjustment is necessary in circuits where substantially uniform amplification for a wide frequency range is desired.

(11) A resistance-capacitance-coupled amplifier can be designed to give a good frequency response for almost any desired range. For instance, such an amplifier can be built to give a fairly uniform amplification for frequencies in the audio range from about 100 to 20,000 cycles per second. Changes in the values of the coupling capacitor and load resistor can extend the frequency range to cover the very wide frequency range required in video amplifiers. However, extension of the range can be obtained only at the cost of reduced amplification over the entire range. Thus, the R-C method of coupling gives a good frequency response with minimum distortion but low amplification.

d. Impedance coupling. (1) Impedance or inductance-capacitance coupling is obtained by replacing the load resistor R_L of a normal resistance-capacitance-coupled amplifier with an inductance L (fig. 116). A greater degree of amplification can be obtained in the high-frequency range by this method than by resistance-capacitance coupling, since the plate load impedance is high for the a-c components of the plate current, but the low d-c resistance of the coil in the plate circuit enables the tube to operate at a higher plate voltage. However, the degree of amplification for various frequencies no longer is uniform. Since the plate load is an inductor instead of a resistor, the load impedance of the circuit Z_L varies with the frequency. This is because the magnitude of the impedance $Z_L = \sqrt{R^2 + X_L^2}$, in which the inductive reactance $X_L = 2\pi fL$, and the resistance R is the resistance of the coil. The d-c resistance of the coil is very low as compared to the load resistor

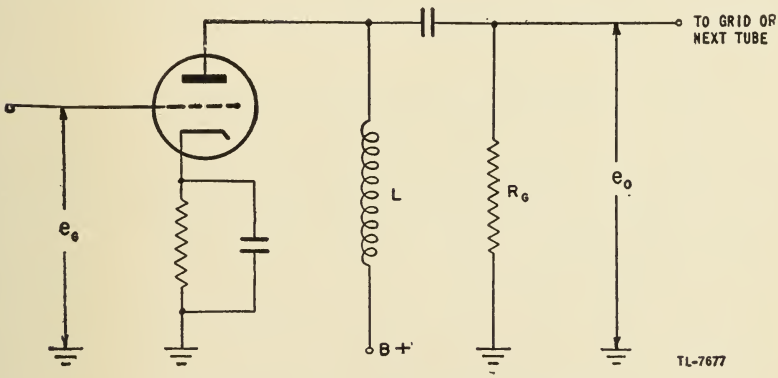

Figure 116. Impedance-coupled amplifier.

in a resistance-capacitance-coupled circuit, and it remains the same value for all frequencies. But the inductive reactance X_L varies with the frequency; it may be small for low signal frequencies and very large for higher signal frequencies. Since the amplification of the stage depends upon the signal voltage built up across the circuit load impedance, for equal signal-voltage input the signal voltage across the plate coil is lower for a low-frequency signal than for a high-frequency sig-

nal. Impedance coupling, therefore, tends to give greater amplification as the signal frequency is increased.

(2) As in the case of resistance-capacitance coupling, a limiting factor exists in the interelectrode and distributed capacitances of the circuit which tend to bypass the high frequencies to ground. Distributed capacitance between the turns of the coil greatly increases the capacitance to ground, limiting the use of impedance coupling in high-frequency circuits. It is possible to design an impedance-coupled amplifier to give a fairly uniform frequency response over a limited frequency range. In this case the degree of amplification is greater than it is for a similar resistance-capacitance-coupled amplifier.

e. Transformer coupling. (1) In a typical transformer-coupled amplifier (fig. 117), the primary of transformer T is connected in the plate circuit of the first tube, while the secondary is connected between the grid and the cathode of the second tube. An input signal, e_o, on the grid of the first tube appears in an amplified version as $e_{.o}$, across the primary. Assuming that the primary reactance is very large compared

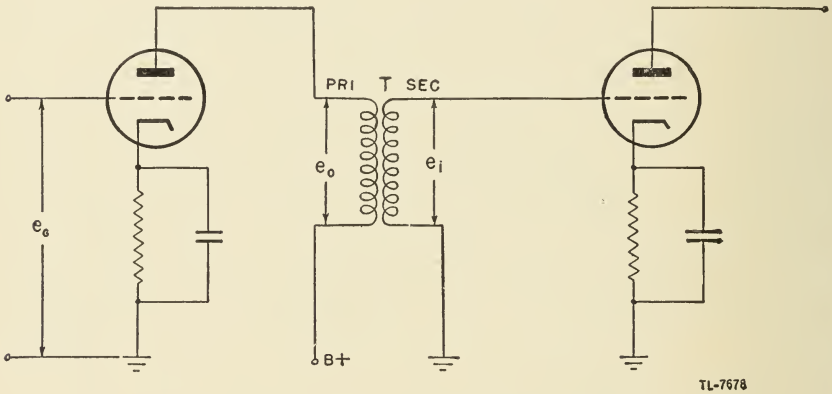

Figure 117. Transformer-coupled amplifier.

to the plate resistance of the tube, the signal $e_{.o}$, is approximately μ (the amplification factor of the tube) times as great as the input signal e_G. Also the signal e_i at the grid of the second tube is approximately N times as great as the voltage $e_{.o}$, where N represents the turns ratio between the secondary and the primary. Accordingly, the maximum possible voltage amplification of a stage of transformer-coupled amplifier is approximately μN. This value is approximate only for the middle range of a wide band of frequencies, because the coupling between primary and secondary is not unity, and the gain is lower for both the low and the high frequencies since the effective load impedance is less in these ranges. Complete equivalent circuits of transformer-coupled amplifiers are very complex networks, but analysis of them can be simplified by a consideration of their response to low, medium, and high frequencies within their frequency spectrum.

(2) In the simplified equivalent circuit for the mid-frequencies (fig 118). N is the ratio of secondary to primary turns and r'_P is the sum of the plate resistance of the tube and the resistance of the primary windings. The reactance of the primary inductance is high enough to

make it essentially an open circuit, while the small shunting capacitances of the windings and tube can be neglected. The voltage amplification

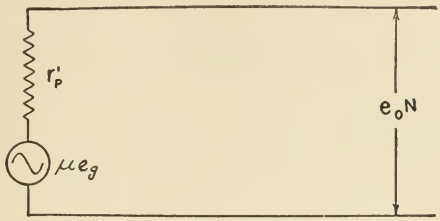

TL-7679

Figure 118. Equivalent circuit of transformer-coupled amplifier at mid-frequency range.

under this condition is equal to the turns ratio times the amplification factor of the tube, or N times μ.

(3) At low frequencies (fig. 119) the shunting action of the interelectrode and distributed capacitance is still less than in the middle frequencies. But the reactance of the primary inductance of the trans-

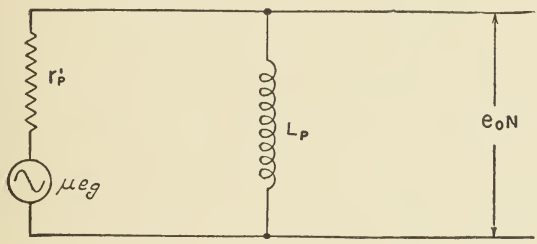

TL-7680

Figure 119. Equivalent circuit of transfomer-coupled amplifier at low-frequency range.

former, which is directly proportional to the frequency $X_L = 2\pi fL$, becomes low and must be taken into account. The decrease in the reactance of the primary inductance of the transformer as the frequency is reduced results in a gradual falling-off in gain at these lower frequencies.

(4) At high frequencies (fig. 120) the reactance of the primary inductance is so great that its effect can be neglected. However, the effect of the shunting capacitance becomes increasingly important. The equivalent circuit takes the form of a series resonant circuit in which R_S represents secondary-coil resistance, L_S represents the primary and secondary *leakage* inductance which is a quantity used to account for the fact that the coupling factor is less than unity and C_s represents the distributed capacitances. Though the Q of the circuit may be low, the resonance effect is sufficiently pronounced to accentuate the response of the amplifier at and near the resonant frequency unless special arrangements are employed to prevent this effect. Above and below the resonant frequency the response falls very rapidly. In transformer-coup-

led amplifiers, tuned primary and secondary circuits sometimes are used when it is desired to amplify a single frequency or a very narrow band of frequencies with the exclusion of all others.

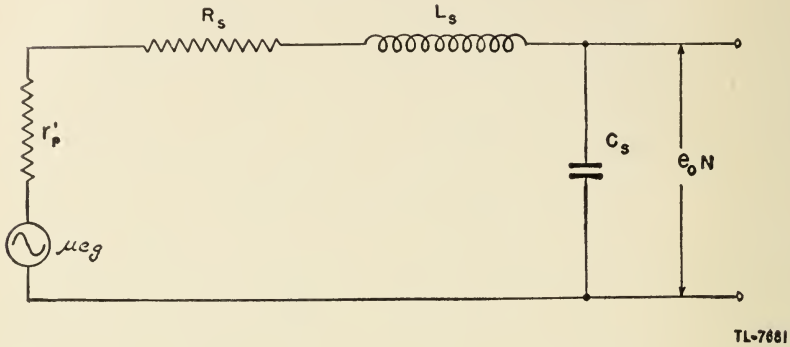

Figure 120. Equivalent circuit of transformer-coupled amplifier at high-frequency range.

(5) Aside from resonance humps caused by this series resonance, the transformer-coupled amplifier is capable of producing a voltage gain greater than the amplification factor of the tube, since the transformer itself steps up the voltage. The transformer-coupled amplifier is often used to couple a high impedance source to a low impedance load, or vice versa. A third advantage of the transformer-coupled amplifier is the ease with which a push-pull output can be obtained from a single-ended input without the use of special phase-inverting circuits.

(6) In comparison to the resistance-capacitance-coupled amplifier, transformer coupling has a poor frequency response. The size and weight of the transformer-coupled amplifier also is much greater. Additional shielding is necessary since transformers, unless properly shielded, pick up interference from stray magnetic fields.

(7) Transformer coupling is used principally as a means of impedance matching, for phase inversion to drive a push-pull amplifier, and in tuned amplifiers for use in r-f and i-f circuits.

f. Direct coupling. (1) In the coupling circuits that have been considered, the coupling device isolates the d-c voltage in the plate circuit from the d-c voltage in the grid circuits, allowing only the alternating components of the output to pass through the coupling device. In the resistance-capacitance and impedance-coupled amplifiers, the coupling capacitor prevents the B supply voltage from getting on to the grid of the succeeding stage. In the transformer-coupled amplifier there is no d-c connection between the primary and secondary windings. It is only the variation in the current or voltage, or the signal, that is passed on to the next stage.

(2) In a direct-coupled amplifier the plate of one tube is connected directly to the grid of the next tube without any intervening capacitor, transformer, or other coupling device. Since the plate of a tube must have a positive voltage with respect to its cathode and the grid of the next tube must have a negative voltage with respect to its cathode, a proper circuit operation demands the use of a special voltage-divider network to obtain the necessary operating voltages. Figure 121 shows

a simple direct-coupled amplifier called a Loftin-White circuit, in which the plate of V_1 is connected directly to the grid of tube V_2.

(3) The voltage distribution is traced most easily from the most negative end of the voltage divider. The grid of V_1 is connected through a grid resistor R_g to A. The proper grid bias is obtained by connecting the cathode of V_1 to point B on the voltage divider, so that when the circuit is in operation the total current flowing through the resistance between points A and B gives the required voltage drop. The plate of V_1 is connected to point D on the voltage divider through the load resistor R_L, which also serves as a grid resistor for the next tube V_2.

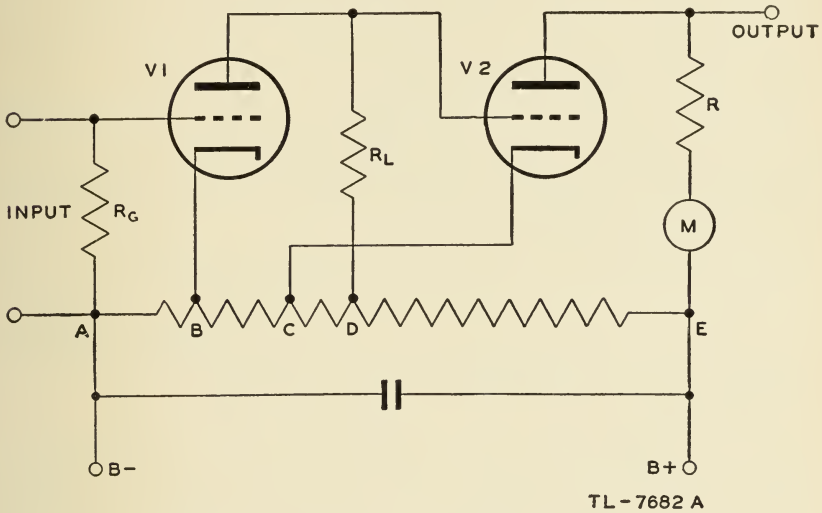

Figure 121. Typical direct-coupled amplifier.

Since plate current flows through resistor R_L, the voltage drop across it must be considered in determining the proper position for the plate-voltage connection at D. Point D is located on the voltage-divider resistor so that approximately half of the available voltage of the power supply is used for this tube. The plate of tube V_2 is connected through a suitable output load to the most positive point E of the voltage divider. The cathode of tube V_2 must be connected at point C where the proper grid-biasing voltage and the proper plate-operating voltage is obtained. Since the voltage drop through resistor R_L may be greater than the required grid bias for tube V_2, it may be necessary to connect the cathode of V_2 at a lower point on the voltage divider, point C, than the plate connection of tube V_1 at point D.

(4) The entire circuit makes a rather complex resistance network which must be adjusted carefully to obtain the proper plate and grid voltages for both tubes. The power-supply voltage must be approximately twice the supply voltage required for a single stage. Since no coupling element is used, the full signal variation at the plate of V_1 is present *at the* grid of the next tube V_2. When the tube voltages are adjusted properly to give Class A operation, the circuit serves as a distortionless amplifier whose frequency response is quite uniform over a wide

range. This type of circuit is particularly effective as a low-frequency amplifier because the impedance of the coupling element does not vary with frequency. Thus a direct-coupled amplifier is capable of amplifying effectively very slow variations of voltage. Because the speed of response of this type of coupling is practically instantaneous, it is very useful in amplifying pulse signals where all distortion caused by differentiation must be avoided.

36. D-C AMPLIFIERS. a. Operation. (1) Direct-current amplifiers are special types used where amplification of very slow variations in voltage or of d-c voltages is desired. A simple d-c amplifier consists of a single tube with a grid resistor across the input terminals and with the load in the plate circuit. The load may be some sort of mechanical device such as a relay, a meter, or a counter, or the output voltage may be used to control the gain of an amplifier.

(2) The d-c voltage to be amplified must be applied directly to the grid of the amplifier tube. Therefore, direct coupling is required in the input circuit. This is demonstrated by figure 122, in which a comparison is shown between a capacitor-input circuit and a direct-input circuit when a d-c voltage is applied.

(3) In the capacitor-input circuit (fig. 122①), the positive d-c voltage applied is shown as a dotted line in the graph above the input ter-

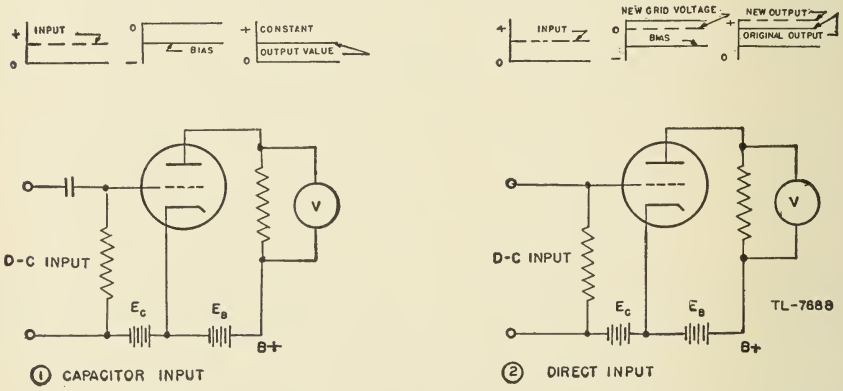

Figure 122. Circuits of amplifiers.

minals. This d-c voltage charges the coupling capacitor. Any variations in the d-c voltage are passed on to the grid of the tube. However, if the applied d-c voltage remains at a constant value after the capacitor is charged, conditions in the grid and plate circuits of the amplifier return to their original values. Therefore, this circuit does *not* amplify a d-c voltage.

(4) In the direct-input circuit (fig. 122②), the normal voltage conditions of the circuit with no input signal are shown by the solid lines on the voltage graphs. In the grid circuit a negative voltage is present at the grid of the tube as a result of the biasing battery E_C. In the plate circuit a fixed value of plate current flows. This causes a fixed voltage drop across the load resistor, which is indicated by the meter connected across the resistor. When a d-c voltage is applied to the

input terminals, this voltage is not blocked by a capacitor but is impressed directly upon the grid of the tube. Therefore it cancels part of the negative bias applied to the grid and makes the grid more positive (or less negative) than before, as shown by the dotted line marked "new grid voltage." This change in grid voltage permits a greater plate current to flow, which is indicated in the meter as a greater voltage drop across the load resistor, as shown by the dotted line marked "new output." Therefore, this circuit serves as a d-c amplifier.

b. Use. (1) One of the most important applications of a d-c amplifier is as a d-c vacuum-tube voltmeter. Figure 123 shows such a circuit, which is essentially the same as figure 122②. The voltage to be measured is applied to the voltage divider made up of R_1, R_2, and R_3. The ratio of voltage division can be varied by the voltage range switch so that several ranges of voltage can be measured. Resistor R_4 is used to prevent damage to the meter if too high a voltage is applied to the grid. In the plate circuit an additional battery and a variable resistor are used to balance the normal plate current of the circuit. The variable resistor can be so adjusted that the meter M in the plate circuit reads zero when no signal is applied. Then, if a d-c voltage is applied to the

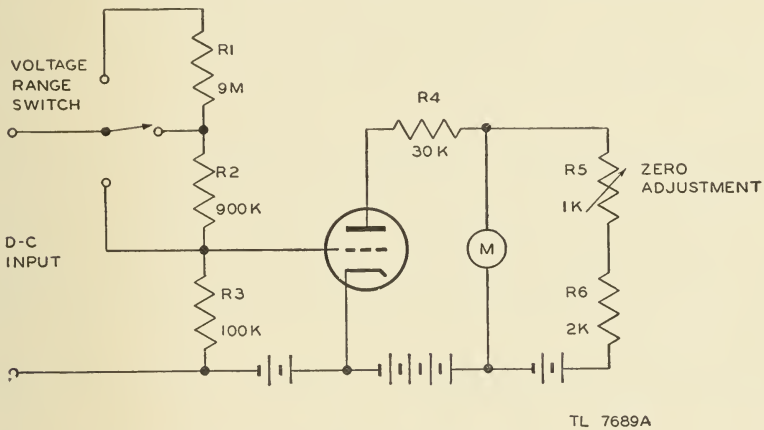

Figure 123. D-c amplifier used as vacuum-tube voltmeter.

input, current flows through the meter. The meter reading is proportional to the d-c voltage applied, which can be read directly on a calibrated scale.

(2) Another important use of a d-c amplifier is to show the exact point of balance between two d-c voltages. This is done by means of a bridge circuit with two d-c amplifier tubes serving as two legs of the bridge (fig. 124). As long as there is no input signal between a and b or b and c, and if the tubes V_1 and V_2 are matched properly, no current reading is indicated by meter M, since the IR drops across R_1 and R_2 are identical. When a signal is applied between a and b or b and c, the grid of one tube is made more positive with respect to the other and, consequently, the plate currents of V_1 and V_2 are not the same. As a result, the IR drops across R_1 and R_2 are not equal and the bridge is unbalanced. In the same way, two d-c voltages can be compared if one is applied between b and a and the other between b

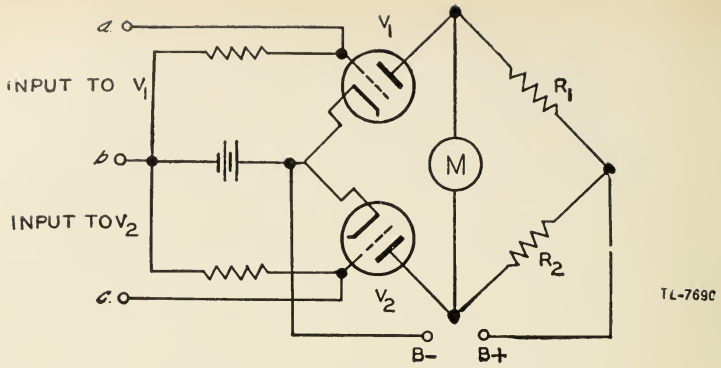

Figure 124. Balanced d-c amplifier.

and *c*. When the voltages are equal, the bridge is balanced and no current flows through the meter. If one voltage is greater than the other, the bridge is unbalanced and current flows through the meter. The amount of current indicated by the meter is proportional to the difference between the two applied voltages, and the direction of the current shows which voltage is greater. Thus the use of such a d-c amplifier in measuring and comparing d-c voltages is found in many important applications in radio and radar work.

37. FEEDBACK AMPLIFIERS. a. General. The term feedback is applied to the process of transferring energy from the output circuit of a device to its input circuit. There are two types of feedback: *regenerative* or positive feedback and *degenerative* or negative feedback. Regenerative is the term applied when the feedback is in phase with the applied signal so that it aids the applied signal. Degenerative is the term applied when the feedback is 180° out of phase with the applied signal, and therefore opposes it.

b. Principle of feedback amplifier. The principle involved in feedback systems in shown in figure 125. A portion *B* of the amplifier output

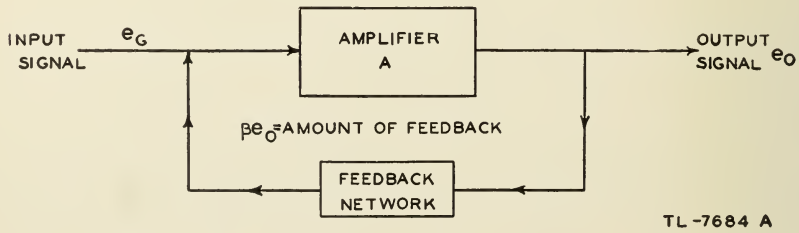

Figure 125. Feedback amplifier—schematic diagram.

votlage e_O is fed back to the amplifier input. The gain of such an amplifier is

$$\text{Gain} = \frac{A}{1 - \beta A},$$

where A is the gain of the amplifier without feedback.

c. Positive feedback. If the quantity $1 - \beta A$ is less than 1, the gain of the amplifier is increased, and the feedback is said to be positive or regenerative. Unfortunately, increasing the gain of an amplifier amplifies and exaggerates any undesirable distortion or noise that may be introduced by the amplifier itself. If a distortionless output is required, positive feedback is not used. However, if the quantity βA is increased until it equals 1, the regeneration becomes so large that sufficient energy is fed back to maintain the operation of the system, and the amplifier becomes an oscillator. This case will be discussed when oscillators are studied.

d. Negative feedback. If the quantity $1 - \beta A$ is greater than 1, the feedback is said to be negative, inverse, or degenerative, and the gain of the amplifier is reduced. In the usual case of negative feedback, βA is made so much larger than 1 that $1 - \beta A$ may be considered equal to $-\beta A$. The gain of the amplifier is then small, and may be expressed as

$$\text{Gain} = -\frac{1}{\beta}.$$

e. Advantages of negative feedback. (1) Degenerative feedback improves the waveform at the output of an amplifier by reducing the distortion which is introduced *within the amplifier.* The signal which is applied to the grid is amplified by a factor A in the output, but the amplitude distortion caused by the nonlinear characteristic of the amplifier is generated within the tube and therefore it is not amplified in the output. Consequently when a fraction of the output is fed back out of phase with the input, the distortion component of the degenerative voltage is amplified by the same factor as the input signal. As a result, the net output may contain practically no distortion, but the amplitude of the desired signal is considerably reduced. However, negative feedback can have no effect on amplitude distortion caused by the flow of grid current in the input stage of an amplifier since this occurs at the grid, and the distortion is therefore amplified in the same ratio as the desired signal.

(2) Noise introduced within an amplifier may be reduced by negative feedback in the same manner that nonlinear distortion is reduced. However, negative feedback can have no effect on the noise component of a signal if the noise is present in the input; it can decrease the noise which is generated *within the section of the amplifier around which the feedback takes place.* Thus, negative feedback cannot affect the noise caused by thermal agitation, shot effect, and microphonics in the early stages of a receiver unless the feedback takes place in these early stages. However, the gain of the first few stages of most radar receivers is so low, because of the high frequency at which they operate, that it is not possible to sacrifice gain by employing negative feedback in order to reduce the noise voltages.

(3) Since the gain of a degenerative amplifier is equal to $-\frac{1}{\beta}$, the amplifier may be made to have any desired frequency response by designing a feedback network in which the factor β has the proper characteristics. If feedback is obtained through a resistive network, the feedback factor β is independent of frequency, so that the frequency response of an amplifier can be improved.

(4) If the load impedance does not form part of the feedback path, the gain of the amplifier can be made independent of the load impedance. To understand this fact, assume that an amplifier is feeding a certain load resistance which is reduced by the connection of other loads in parallel with it. Under this condition, the output voltage tends to drop, so that if degenerative feedback is provided, the feedback also tends to decrease, causing the effective gain to increase. The increase of gain offsets the tendency for the output to drop, so that the output remains nearly constant. On the other hand, if the load is reduced or removed altogether, the rise in output voltage is checked by increased feedback.

(5) It was shown above that the gain of a degenerative amplifier is equal to $-\frac{1}{\beta}$. It is apparent, then, that the gain is proportional only to the feedback factor, and the effects of variations of battery voltage or ageing of tubes are eliminated. Hence, the gain stability of an amplifier is improved by negative feedback if the feedback factor is large.

f. Methods used to obtain degenerative feedback. (1) Degenerative feedback can be obtained in a practical amplifier in several ways. One common arrangement employs the voltage-divider circuit (fig. 126). Here a portion of the output voltage is applied through an R-C network to the input grid circuit. Assuming that an input signal makes the grid of the tube less negative, the resulting increase in plate current decreases the potential at the top of the primary of the output transformer T_1. This drop in potential is transmitted through capacitor C_1 and resistor R_1 to resistor R_2, decreasing the potential at the top of R_2, thus adding a negative-going feedback voltage to the positive-going signal voltage on the grid by way of the secondary of the input transformer T_2.

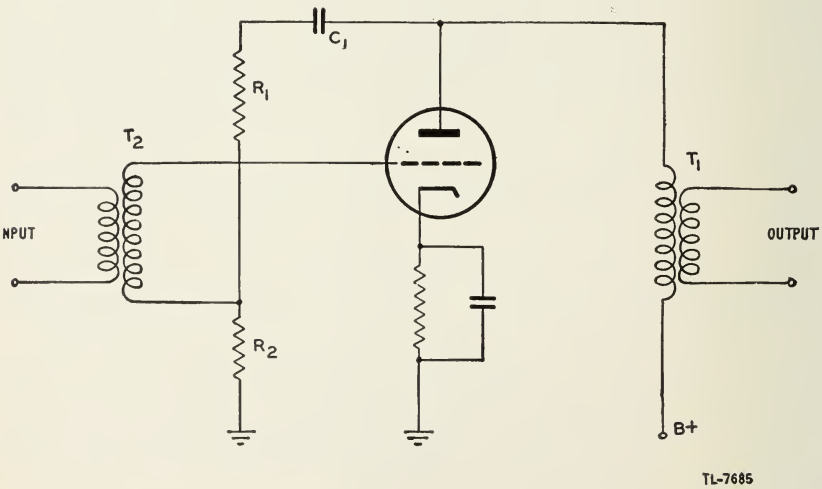

Figure 126. Simple degenerative amplifier employing voltage feedback.

(2) Another method used to obtain negative feedback is illustrated in figure 127. Here the feedback voltage is developed across the unbypassed cathode resistor R_K as a result of the flow of plate current through it. Since this resistor is located between the cathode and the grid of the tube, any voltage developed across it appears in series with the input

signal of the tube. The phase relation is correct for degeneration to occur. Thus, when a positive signal appears on the grid of the tube, the plate current increases, and the IR drop across R_K also increases. A voltage

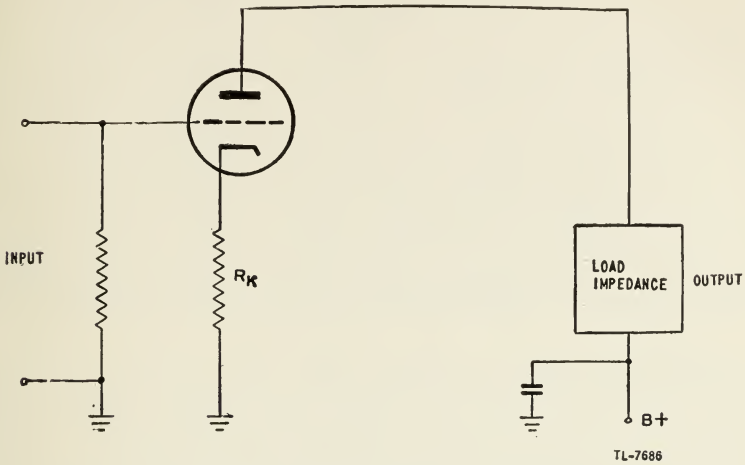

Figure 127. Current-feedback amplifier.

increase across the cathode resistor makes the grid more negative relative to the *cathode,* the reverse of the signal voltage. This arrangement is known as current feedback, as opposed to voltage feedback shown in figure 126. The fact that an output voltage can be developed across an unbypassed cathode resistor is used in several special amplifiers such as some types of phase inverters and the cathode follower.

(3) Degenerative amplifiers having more than one stage can be used if proper attention is given to phase relations. However, because of practical difficulties, such amplifiers usually are limited to one or two stages. Figure 128 illustrates a two-stage feedback amplifier. R_1 is the

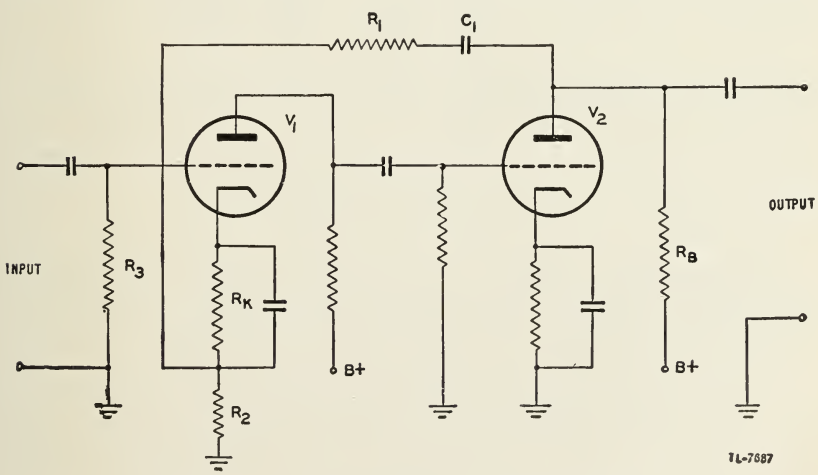

Figure 128. Two-stage degenerative amplifier.

resistance that, in conjunction with R_2, forms a voltage divider for making the feedback voltage the desired fraction of the output voltage. R_2 is the resistance across which feedback voltage is developed. R_3 is the high resistance for the grid leak. R_K is the resistance across which bias voltage is developed. C_1 is a blocking capacitor of such capacitance as to introduce negligible reactance or phase shift at frequencies that are amplified appreciably. A positive pulse applied to the grid of the first tube causes the grid of the second tube to go more negative. As a result, the plate current of the second tube decreases, causing the top of the output resistor R_B to become more positive. This rise in voltage is transmitted through R_1 and C_1 to the top of R_2, causing a rise in potential at this point. Thus, the potential of the cathode is made more positive with respect to ground, increasing the bias on the grid of V_1 which, in effect, adds an out-of-phase component to the positive input voltage and reduces its amplitude. In other words, the amplitude of the voltage swing between grid and cathode is reduced by the amount of the negative feedback voltage.

38. TUNED AMPLIFIERS. a. General. In a tuned amplifier, part of the coupling circuit is a parallel resonant circuit. Because of the selective properties of the resonant circuit, tuned amplifiers (fig. 129) are used as radio-frequency and intermediate-frequency amplifiers where a narrow band of frequencies is to be amplified and all other frequencies eliminated.

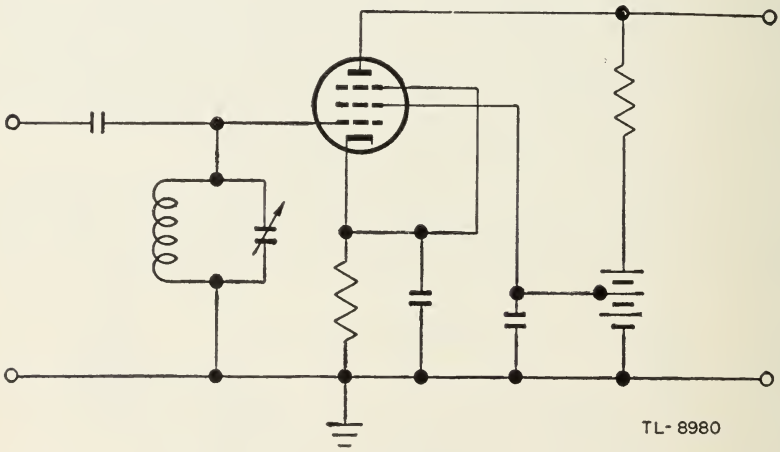

Figure 129. Tuned amplifier.

b. Radar-frequency amplifiers. (1) For radar, special modifications of conventional r-f and i-f tuned amplifiers are necessary. A typical high-frequency-tuned amplifier for radar use is shown in figure 130.

(2) The tuned circuit consists of a small coil that resonates with its own distributed capacitance, the distributed capacitance of the wiring, and the interelectrode capacitances of the tube. It may be tuned with a movable brass slug which acts as a shorted turn, or with a movable powdered iron core. Both of these methods vary the effective inductance which changes the resonant frequency of the amplifier.

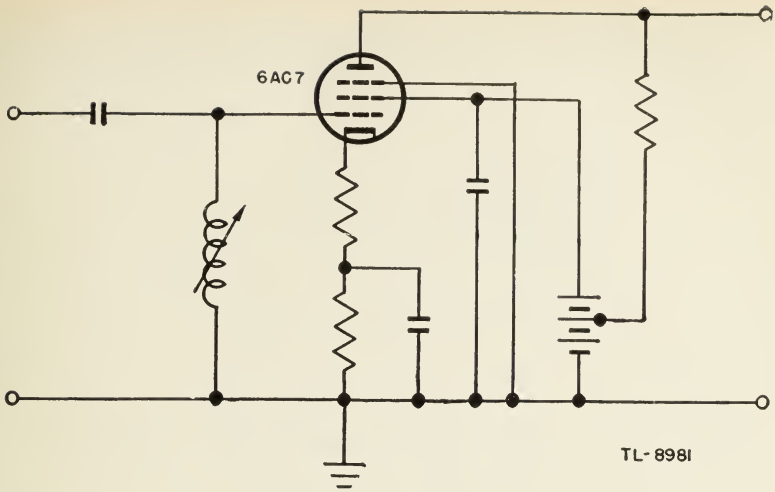

Figure 130. Tuned amplifier for radar frequencies.

(3) The tube must have low interelectrode capacitance so that the coil can be of reasonable size at the high frequencies to which the circuit is tuned Since a low plate-load resistance is used to obtain a wide bandwidth, the gain of the amplifier will be lowered. Therefore, a high mutual conductance (g_m) is desirable for good amplification. Special tubes with these characteristics are available, of which the 6AC7 is a widely used example. The gain obtainable from the amplifier is low because of the low plate-load resistance so that a high supply voltage is not necessary to obtain the full capabilities of the tube. The screen usually is operated at the same voltage as the plate or higher. The input capacitance of this type of tube is affected considerably by the grid voltage. Because a variable input capacitance causes distortion, some degeneration is introduced by leaving part of the cathode resistor unbypassed to reduce this distortion. Because of the difficulties of proper adjustment transformer-coupled double-tuned circuits are not often used.

(4) When a single-tuned circuit is used in an amplifier, as in figure 130, the tuned circuit may be in either the plate or the cathode circuit. When tuned circuits are used in both the grid and plate circuits, the amplifier is said to be *doubled-tuned,* double-tuned amplifiers are seldom used unless it is necessary to have a greater bandwidth than can be obtained with a capacitive-coupled circuit. Transformer-coupled single-tuned circuits are not subject to such difficulties and are widely used.

39. VIDEO AMPLIFIERS. a. General. A video amplifier is distinguished from the usual audio amplifier by the fact that it must be able to amplify uniformly a wide band of frequencies, including the audio-frequency range and going far beyond it. A good audio-frequency amplifier must amplify uniformly all frequencies within the audio range. The audio range includes frequencies from 15 to 15,000 cycles per second. An audio amplifier is considered to be in the high-fidelity class if it produces uniform amplification over this frequency range. The variation of amplification with frequency in a typical resistance-coupled audio amplifier is

shown in figure 113. Such an amplifier is not suitable for the amplification of a wide band of frequencies in which the range may extend from a few cycles per second to several megacycles per second. It is possible

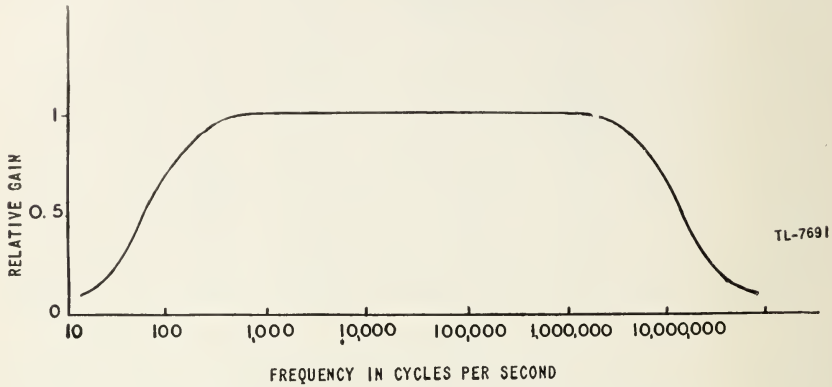

Figure 131. Frequency response of a video amplifier.

to construct an amplifier which will give a fairly constant response for this wide band (fig. 131) but this can be done only by reducing the amplification that can be obtained within each stage.

b. Resistance-capacitance-coupled circuit. (1) While transformer and impedance coupling of the amplifier stages can be used successfully in an audio amplifier, a better over-all frequency response, even for the limited audio-frequency range, is obtained by the use of resistance-capacitance coupling. A resistance-capacitance-coupled circuit used as a video amplifier differs from an audio amplifier only in the values of the circuit elements.

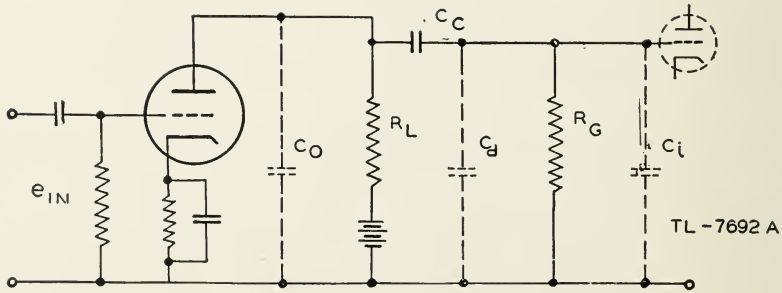

Figure 132. R-C coupled amplifier.

(2) The resistance-capacitance-coupled amplifier shown in figure 132 presents two problems which must be overcome before the R-C-coupled amplifier can be employed for a wide-band amplification. The high-frequency response is limited by the output capacitance C_o, distributed capacitance C_d, and input capacitance of the following stage C_i acting in parallel to shunt the load resistance R_L. The low-frequency response is limited by the time constant R_gC_c which must be long as compared to the period of the lowest frequency to be amplified. Tubes with very low inter-

electrode capacitance must be used. Care must be taken in wiring the circuit to keep leads short and properly spaced in order to reduce distributed capacitance in the wiring.

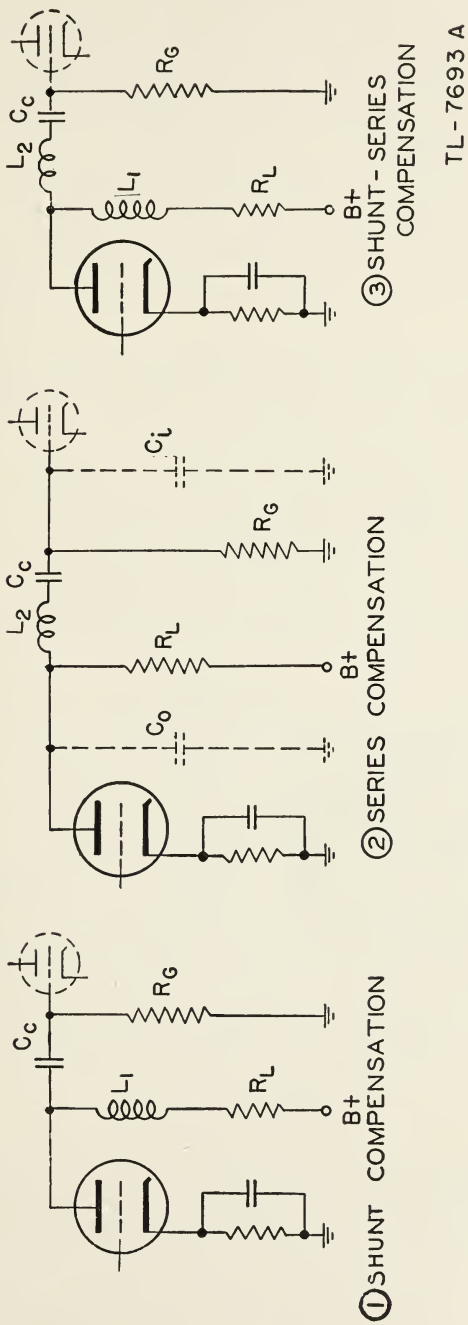

Figure 133. High-frequency compensation.

c. High-frequency compensation. (1) The principal cause of the reduced gain at the high frequencies is the reduction of the plate-load impedance caused by the shunting effect of the interelectrode and distributed capacitances. It is possible to compensate for this effect and to extend the high-frequency range of the amplifier by adding a small inductance L_1 in series with load resistor R_L (fig. 133①). This shunt compensation coil serves to boost the response of the high frequencies while it has practically no effect upon the lower frequencies. This method serves effectively when the maximum-frequency limit is not too high and there are only a few stages of amplification.

(2) Another method of high-frequency compensation is series compensation. In this case the small inductance L_2 is connected in series with the coupling capacitor C_c (fig. 133②). The small inductance L_2 resonates with the capacitance C_i at high frequencies, causing an increased current through C_i, and hence an increased voltage across C_i which results in a higher gain.

(3) The two methods can be combined in the shunt-series compensation system of figure 133③, which has the advantages of both methods. The combined system gives the high-frequency peaking effect of the shunt-compensation circuit as well as the increased gain caused by the resonant effect of the series-compensation circuit.

d. Low-frequency compensation. (1) The low-frequency response of a video amplifier is affected by the grid-coupling circuit. Because of the increasing reactance of the coupling capacitor, this circuit tends to attenuate the lower frequencies from about 200 cycles down.

(2) The value of C_c is sufficiently large that at the middle and high frequencies the reactance is negligible and the full voltage output of the

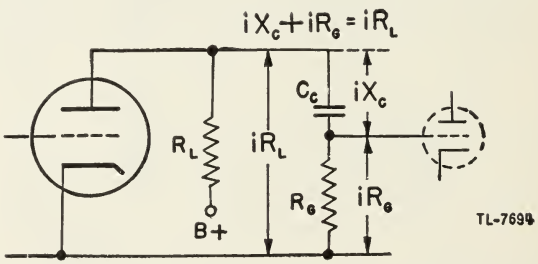

Figure 134. Low-frequency voltage-divider effect of R-C coupling circuit.

first is developed across the input R_g of the following stage. However, as the frequency goes down, the reactance of C_c increases as shown by the relation

$$XC_c = \frac{1}{2\pi f C_c}$$

Thus a voltage-divider effect becomes more appreciable as the frequency is lowered, and a decreasing value of voltage appears across R_G (fig. 134). This effect results in a smaller percentage of the output of one stage appearing at the input of the following stage. The extent to which the value of the coupling capacitor C_c can be increased is limited because an increase of the physical size of the capacitor increases the stray capacitance, which affects the high-frequency response. For these reasons the largest value

of the coupling capacitor C_C that can be used has a practical limit of about 0.1 microfarad. In addition, some means of compensation is necessary.

(3) The loss of gain at low frequency can be remedied by the addition of a low-frequency compensation filter in series with the load resistor. This compensation circuit consists of two elements, a capacitor C_F and a resistor R_F, forming a filter circuit (fig. 135). The purpose of the filter in series with the plate load resistor R_L is twofold. First, it introduces a phase shift in the plate circuit that compensates for the phase shift in the coupling circuit R_GC_C. Second, it effectively increases the plate load impedance at low frequencies, thus maintaining the gain.

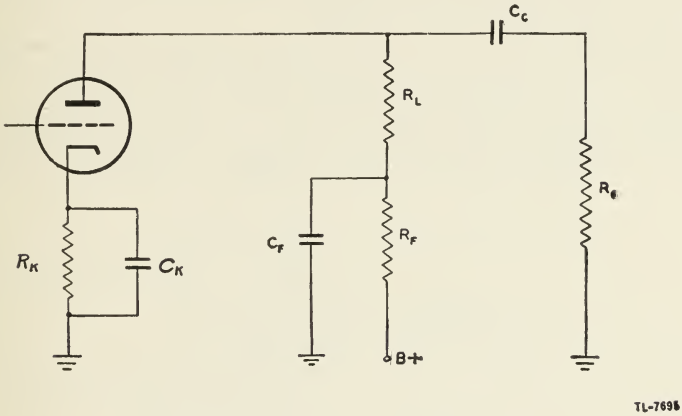

Figure 135. Low-frequency compensation.

e. Cathode bias and filter circuit. In an amplifier stage the necessary grid bias usually is obtained by utilizing the voltage drop across a resistor connected in series with the cathode. The total electron current through the tube passes through this resistor. Since the tube current varies with the variations of the applied signal voltage, a varying voltage is developed across the cathode resistor R_K. In order to obtain a steady value of grid bias these signal variations must be bypassed around the bias resistor by means of the cathode bypass or filter capacitor C_K. The reactance of this capacitance must be low to provide a low-impedance path around the resistor for the alternating components of the signal. For audio-frequency amplifiers this capacitor must have a value of 5 microfarads or greater. For video-frequency amplifiers, which may pass much lower frequencies, the capacitance of the cathode capacitor C_K must often be much greater, 100 microfarads or more. In general, the time constant R_kC_k must be long compared to the period of the lowest frequency to be passed.

40. CATHODE FOLLOWERS. a. General. (1) The cathode follower is a degenerative vacuum-tube circuit in which the inverse feedback is obtained by way of an unbypassed cathode resistor, across which the output is taken. This circuit is essentially an impedance-matching or impedance-lowering device having less than unity voltage gain but capable of producing power gain. Its high input impedance and very low output impedance render it particularly suitable for coupling between pulse-generating or pulse-transmitting stages and transmission lines or circuits with shunt

capacitance which otherwise might cause objectionable effects. The cathode-follower output "follows" the grid-input voltage and hence is of the same polarity. The output voltage of a cathode follower has good regulation because of its low impedance while the input voltage to the cathode follower may have a high impedance and very poor regulation.

(2) The output of one unit of equipment often must be fed through a coaxial cable which may be, in some cases, as long as 50 feet. Such a cable, because of its distributed capacity, inductance, and resistance, represents at the output an impedance which is much lower than the output impedance of a conventional amplifier. A cathode follower designed with a low impedance output can deliver much more of its output through such a line than can a conventional amplifier.

b. Circuit operation. (1) The conventional cathode follower (fig. 136) is a single-stage inverse feedback circuit in which the output voltage is taken across the cathode resistor. The cathode bypass capacitor is absent and either the plate is tied directly to $B+$ or the plate load resistor, if present, is bypassed. Thus, if a positive signal is applied to the grid, the

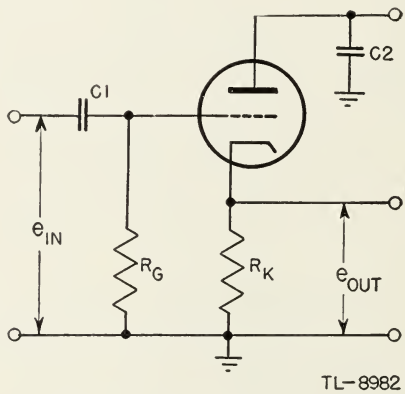

Figure 136. Conventional cathode follower.

rise in plate current through R_k produces a greater i_pR_k drop, making the cathode more positive. Likewise, a negative signal applied to the grid causes a decrease in the i_pR_k drop, making the cathode less positive. Thus, the voltage across the cathode resistor "follows" the grid, which in effect tends to reduce the voltage difference between grid and cathode as established by the input signal.

(2) If no signal is applied to the grid there is a certain amount of plate current flowing through R_k. The resulting i_pR_k drop establishes the amount of no-signal bias developed across the resistance. Thus, the signal variation on the grid produces a plate-current variation through the cathode resistor which reduces the effectiveness of the input signal.

c. Voltage gain. (1) The equivalent circuit for the cathode follower is shown in figure 137. The signal applied between grid and ground is represented by an equivalent generator with an output voltage of μe_{in}. The degenerative voltage developed across the cathode resistor is represented by an equivalent generator with an output voltage of $-\mu i_pR_k$. The minus sign indicates that the degeneration reduces the voltage effec-

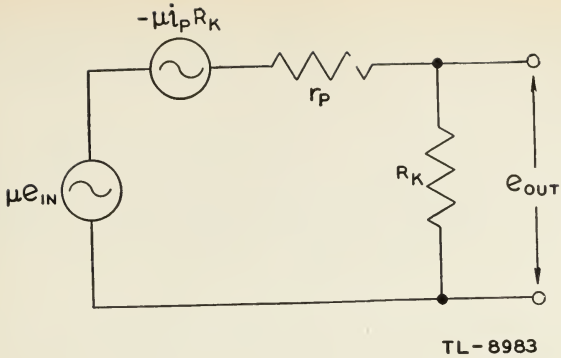

Figure 137. Cathode follower equivalent circuit.

tive in driving current through the tube. Since the net voltage acting in the circuit is $\mu e_{in}—\mu i_p R_k$, the current which flows in the tube is

$$i_P = \frac{\mu e_{in} - \mu i_P R_K}{r_P + R_K} = \frac{\mu e_{in}}{r_P + R_K(\mu + 1)}$$

The output voltage is

$$e_{R_K} = i_P R_K = \frac{\mu e_{in} R_K}{r_P + R_K(\mu + 1)}$$

so that the gain of the stage is

$$\text{gain} = \frac{e_{R_K}}{e_{in}} = \frac{\mu R_K}{r_P + R_K(\mu + 1)}$$

where μ is the amplification factor of the tube, R_K is the resistance in the cathode circuit, and r_P is the a-c plate resistance of the tube. Since the amplification factor of a pentode is very large compared to unity, the expression for the gain of a pentode cathode follower may be simply stated as

$$\text{gain} = \frac{R_K}{\frac{1}{g_M} + R_K}$$

As the denominator is always greater than the numerator, it is evident that the gain of the cathode follower is always less than unity.

(2) Any change in e_{in} must appear in part as a change in bias in order to produce a change in plate current, and only the remainder of the input voltage is available to appear at the output. This lack of gain, while undesirable, cannot be avoided if the low output impedance of the cathode follower is to be maintained.

(3) Since the change in plate current resulting from a signal on the grid causes a change in voltage across R_k in the same direction as the applied signal, no polarity inversion results. A positive input produces a positive output and a negative input produces a negative output. This lack of polarity inversion is contrary to the results obtained in ordinary amplifier circuits.

d. Input impedance. (1) The input impedance is high. Cathode followers are operated with the grid negative with respect to the cathode.

Thus a high-amplitude positive voltage may be applied between grid and ground and no grid current will flow. This is due to the degenerative action of the cathode resistor and the high-input impedance is maintained during the positive input signal.

(2) The input capacitance between grid and ground is less than that for the same tube used as a conventional amplifier. This results from the fact that degeneration reduces the effective input voltage below the applied value causing less current to flow through the tube capacitances. Because of this high-constant-input impedance the cathode follower has negligible loading effect on the circuit employed to drive it.

e. Output impedance. (1) The output impedance is low. If in the expression for the plate current that flows in the circuit of figure 137, both the numerator and denominator are divided by $\mu + 1$, the expression will have the form of the plate current of a circuit in which the tube has an amplification factor of $\frac{\mu}{\mu + 1}$ and an a-c plate resistance of $\frac{r_P}{\mu + 1}$.

$$i_P = \frac{\left(\frac{\mu}{\mu + 1}\right) e_{in}}{\left(\frac{r_P}{\mu + 1}\right) + R_K}.$$

The equivalent circuit of the cathode follower is redrawn in figure 138 to show these revised constants.

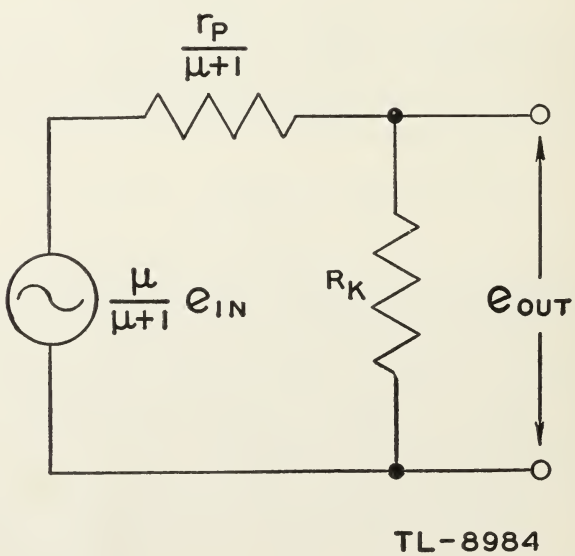

Figure 138. Equivalent output circuit of a cathode follower.

(2) The output impedance of the cathode follower is the parallel combination of the cathode resistance and the effective a-c plate re-

sistance. In general, the output impedance is resistive, and is expressed as

$$Z_O = R_O = \frac{(R_K)\left(\frac{r_P}{\mu + 1}\right)}{R_K + \frac{r_P}{\mu + 1}} = \frac{R_K r_P}{r_P + R_K(\mu + 1)}.$$

For a pentode in which the amplification factor is large compared to unity, the output resistance may be expressed simply as

$$R_O = \frac{R_K}{1 + R_K g_m}$$

Example: If a typical high-gain triode connected as a cathode follower has a plate resistance of 10,000 ohms, an amplification factor of 20, and a cathode resistor of 1,000 ohms, find the gain and the output impedance of the stage.

$$\text{Gain} = \frac{\mu R_K}{r_P + R_K(\mu + 1)}.$$

$$\text{Gain} = \frac{20 \times 1000}{10{,}000 + 1000\,(20 + 1)} = \frac{20{,}000}{31{,}000} = 0.65.$$

$$R_O = \frac{R_K r_P}{r_P + R_K(\mu + 1)}.$$

$$R_O = \frac{1000 \times 10{,}000}{10{,}000 + 1000\,(20 + 1)} = \frac{10{,}000{,}000}{10{,}000 + 21{,}000}.$$

$$R_O = \frac{10{,}000{,}000}{31{,}000} = 323 \text{ ohms output resistance.}$$

The impedance is very low as compared to that of the usual amplifier stage and accounts for the fact that the output voltage maintains the shape of the input voltage despite the current drawn from the output terminals.

f. Distortion caused by limiting. (1) The output voltage of the cathode follower is essentially distortionless when operated within its normal range. However, if the input voltage is of sufficiently high amplitude, limiting action occurs and the output voltage is distorted with respect to the input.

(2) If e_{in} is a negative voltage of sufficiently high amplitude, plate-current cut-off is eventually reached and any further change in the negative direction on the grid does not appear in the output waveform.

(3) In order to accommodate negative signals of higher amplitude on the grid without the effects of cut-off limiting, the cathode follower may be modified as shown in figure 139. The bias is reduced because the grid resistor R_G is terminated at a more positive point on R_k, therefore e_{in} can swing to a greater negative value without cutting off the tube. Otherwise the operation of the circuit is essentially the same as that of the cathode follower illustrated in figure 136.

g. Advantages. (1) By employing a tube having a high μ with a small value of r_p, a very low output impedance is obtained. In other words, select a tube with a high value of mutual conductance (g_m). The low value of output impedance results in a high upper frequency limit since the shunting effects of the tube capacitance and wiring are correspondingly small.

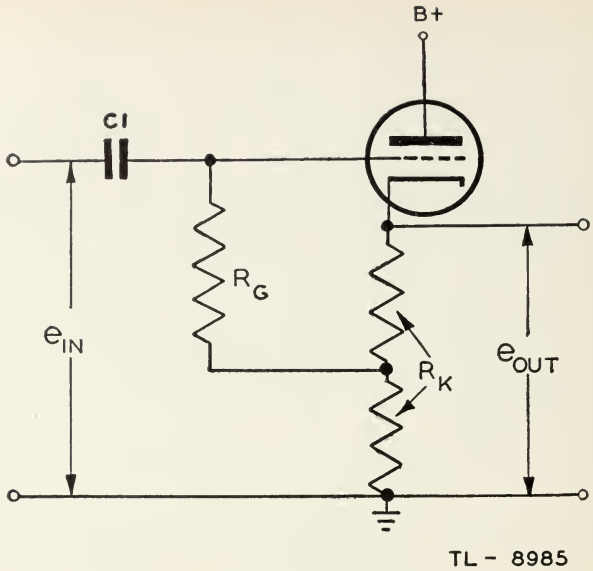

Figure 139. Cathode follower with reduced grid bias.

(2) The output and input voltages have the same polarity. This is advantageous in applications involving the use of voltage pulses.

(3) The degenerative feedback results in a good circuit stability and improves the circuit performance with respect to variations in supply voltage, aging of tubes, harmonic reproduction, etc.

(4) The input impedance is increased by the degeneration so that it imposes less shunting effect on the preceding stage.

41. PHASE INVERTERS. a. General. (1) A circuit which produces an output voltage of opposite polarity to the input voltage without distorting the waveshape is called a phase inverter. For example, a positive-going square pulse applied to a phase inverter produces in the output a negative-going square pulse of the same shape as the input pulse.

(2) In some cases where a waveform of the desired shape and amplitude but wrong polarity is developed, some type of phase-inverter circuit with unity gain may be used for changing the polarity. In other cases, two input signals of opposite polarity are required although only a single input wave-form of the desired waveshape is available. This input may be applied to an amplifier to obtain the desired amplitude and to a phase inverter to provide a waveform of the same amplitude but of opposite polarity to that of the amplifier output. The two output voltages then may be applied to a push-pull circuit. This combination of amplifier and phase inverter to provide a push-pull output from a single input wave sometimes is called a *paraphase amplifier* or a *phase splitter.*

(3) The name "phase inverter" is somewhat misleading since phase ordinarily is associated with time. There is no appreciable time difference (or phase shift) between the input and output of the ordinary phase inverter. It is only an apparent phase inversion since it is the polarity

of a signal which is inverted. This gives the same effect, with sine-wave signals, as a 180° phase shift.

b. Transformer inverter. (1) In all transformers a current through the primary induces in the secondary a voltage that is of opposite polarity to the primary voltage (fig. 140). Of course, the output or input

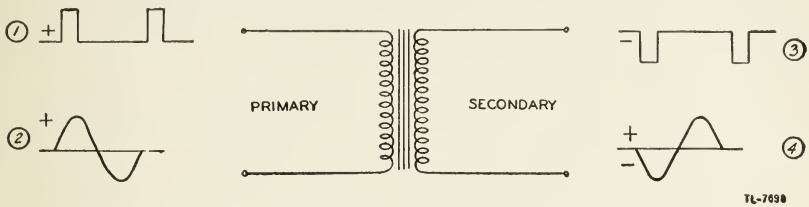

Figure 140. Transformer phase inversion.

connections to the transformer can be reversed if the same polarity is desired. It is clearest to refer to the output as a voltage whose polarity is inverted relative to that of the primary voltage (fig. 140① and ③). However, when a sine-wave signal is used (fig. 140② and ④), it sometimes may be convenient to refer to the polarity inversion as a 180° phase shift. The amplitude of the secondary voltage depends on the ratio of transformation of the transformer. If the output is to have the same amplitude as the primary voltage, the ratio of the transformer must be one to one.

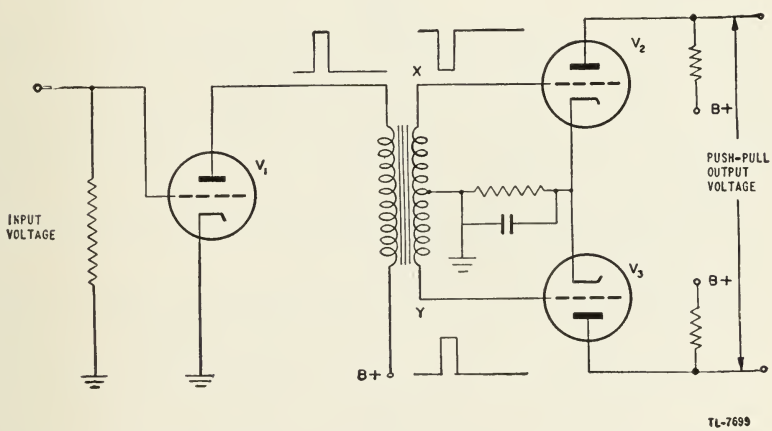

Figure 141. Center-tapped transformer used to drive push-pull amplifier.

(2) If two output signals of equal amplitudes and opposite polarities are required to drive a push-pull amplifier, a transformer with a center-tapped secondary may be employed (fig. 141). With the center tap grounded, the point Y goes positive relative to ground at some instant when the point X goes negative relative to ground. Thus, the voltage on the grid of V_2 is of opposite polarity to the output of V_1 and the voltage on the grid of V_3 is of the same polarity as the output of V_1. If the point on the secondary which is grounded is exactly in

the center of the winding, the amplitude of the voltage applied to V_2 is equal to the amplitude of voltage applied to V_3.

(3) An alternate arrangement which does not require the use of a transformer with a center-tapped secondary is shown in figure 142. Since the voltage across resistors R_2 and R_3 is equal to the voltage across the secondary of the transformer, the mid-point of the transformer secondary can be grounded effectively by making R_2 equal to R_3 and grounding their junction. The effect is the same as with a center-tapped secondary winding.

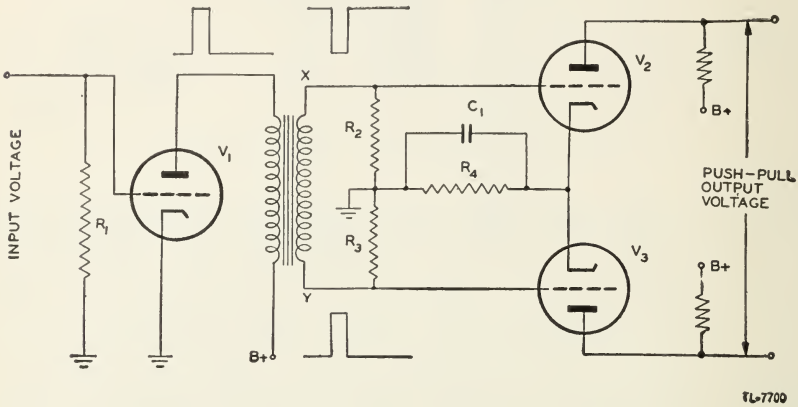

Figure 142. Voltage divider used to provide effective center tap.

(4) Use of a transformer as a phase inverter is limited by the distortion that the transformer introduces. This distortion arises principally from the fact that the ratio of transformation varies with the frequency. In addition, the losses of the transformer vary with the frequency. In radar most of the circuits must handle distorted waveforms which contain many harmonic frequencies. If these several harmonics are transformed by different ratios, the output waveform will be distorted. For this reason, specially designed circuits which can invert voltages composed of a wide band of frequencies are used generally in radar in preference to the transformer.

c. Vacuum-tube phase inverter. (1) Any vacuum tube used as a con-

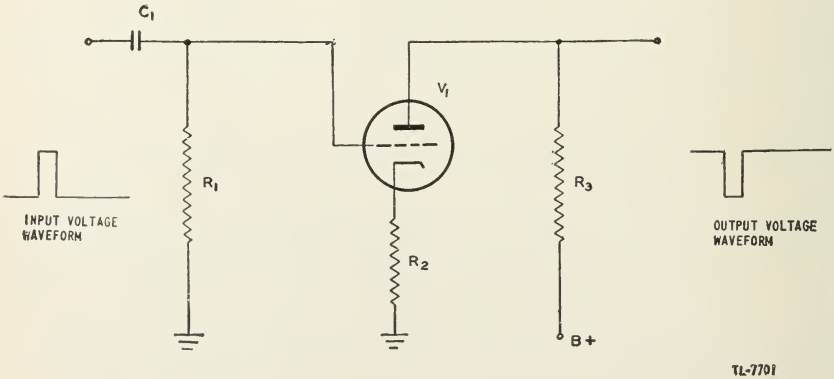

Figure 143. Vacuum-tube phase inverter employing cathode degeneration.

ventional amplifier has an output of opposite polarity to the input. In other words, a positive-going signal on the grid produces a negative-going signal at the plate. However, in most applications of the vacuum tube the signal at the plate has an amplitude greater than that of the input signal. If the vacuum tube is to be used simply as a means of reversing the polarity of a signal, without affecting the amplitude or shape of the applied voltage, some means must be found to reduce the amplification to a 1-to-1 ratio.

(2) One common method of reducing the gain of an amplifier is to introduce degenerative or negative feedback by omission of the usual bypass capacitor across the cathode resistor (fig. 143). The degeneration occurs because the potential of the cathode rises as the grid potential rises, thus preventing the swing of voltage effective between grid and cathode from reaching the amplitude of the applied grid signal. If R_2 is made the proper value of resistance, the gain of the tube can be canceled, and the output voltage at the plate of V_1 is equal in amplitude to the input voltage at the grid.

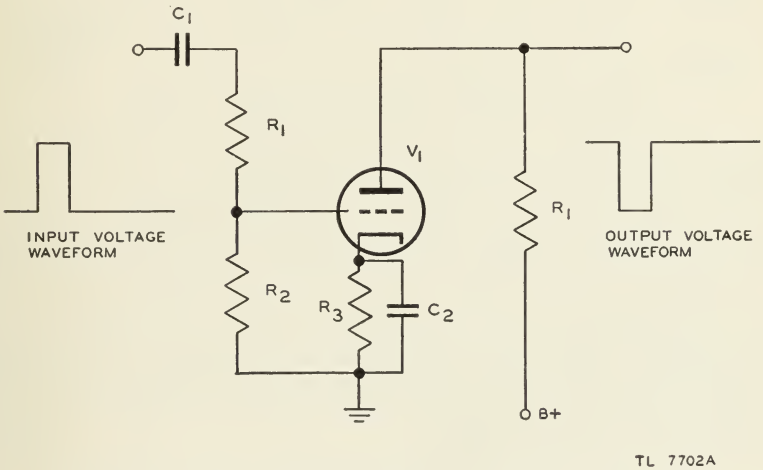

Figure 144. Voltage divider used to reduce over-all gain to unit.

(3) A second way to reduce the gain of the vacuum tube to unity is to use a voltage divider in the input circuit to reduce the amplitude of the grid signal (fig. 144). If the gain of the vacuum tube is 30, then the voltage divider, consisting of R_1 and R_2, must be designed so that the voltage across R_2 is one-thirtieth of the voltage available. The voltage that appears across R_2 is amplified by the tube so that the output voltage is of the same amplitude as the input voltage to the voltage divider. If the waveform which is to be inverted contains many harmonics, special care must be taken to compensate the voltage divider for the shunting effect of the stray capacitances associated with it.

d. Single-tube paraphase amplifier. (1) A paraphase amplifier is a circuit which converts a single input to a push-pull output. It is easy to remember what "paraphase" means if the pronunciation is distorted to "pair of phases."

(2) A vacuum-tube amplifier in which the plate-load resistance is divided equally between the plate and cathode circuits is the simplest

form of paraphase amplifier (fig. 145). The resistors R_2 and R_3 have the same resistance. The amplitude of the voltage developed across these two resistors is the same since the same current flows through them. The polarity of the two output voltages is opposite because the

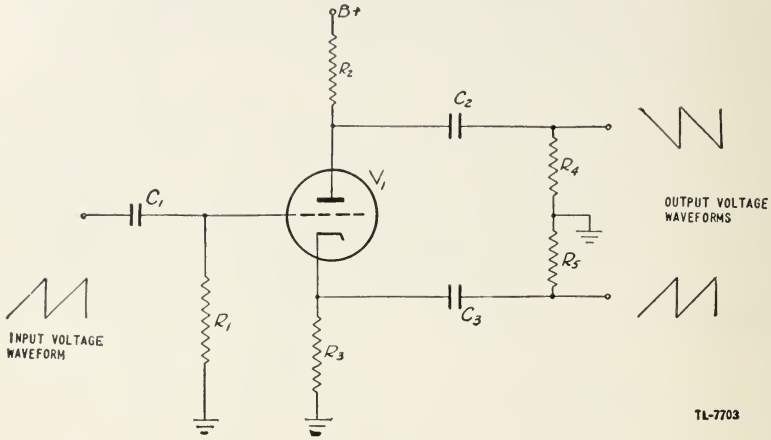

Figure 145. Simple single-tube paraphase amplifier.

cathode output is taken from the more positive end of R_3 and the plate output is taken from the less positive end of R_2.

(3) A variation of the single-tube paraphase amplifier is shown in figure 146. Here the input signal is applied between grid and ground, as in figure 145, but the operating grid bias is limited to the voltage drop across R_3. In some cases, R_3 may be bypassed by a capacitor to avoid degeneration in this portion of the circuit. If R_3 is unbypassed, its value added to that of R_4 should equal the resistance of R_2. If R_3 is bypassed, R_2 and R_4 are made equal in value. The gain of the circuit must be less than two because of the cathode follower action of the resistance in the cathode circuit.

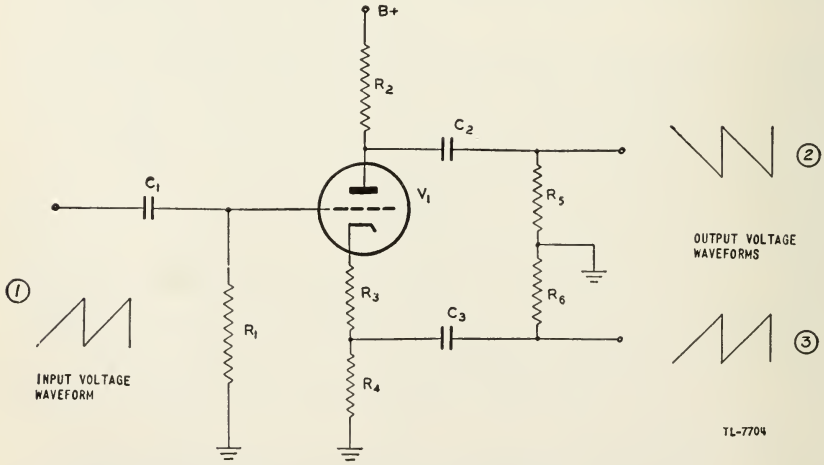

Figure 146. Biased single-tube paraphase amplifier.

e. Two-tube paraphase amplifier. (1) A two-tube paraphase amplifier consists of one tube which is used as a conventional amplifier and a second tube which is used as a phase inverter. Very often this combination is called simply a phase inverter.

(2) The combination of the circuit shown in figure 144 with an amplifier circuit produces one form of paraphase amplifier (fig. 147). The input waveform ① to V_1 is of the desired shape, but the amplitude is less than desired. V_1 is connected as a conventional amplifier to produce a voltage of larger amplitude ②. This output voltage is im-

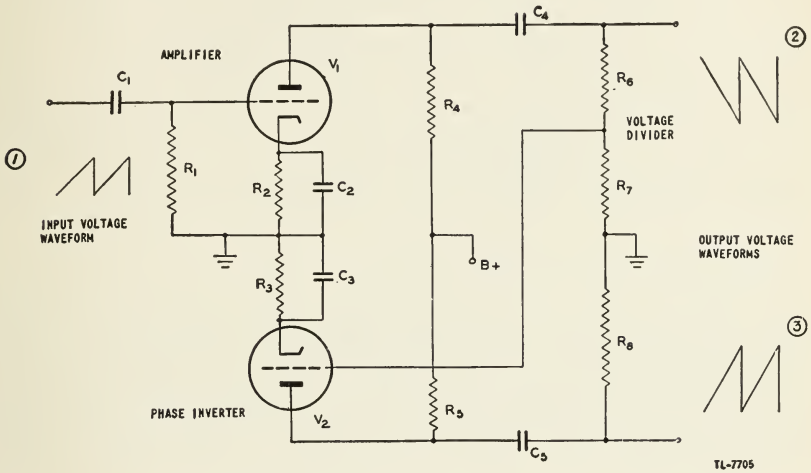

Figure 147. Paraphase amplifier which uses voltage divider.

pressed on the voltage divider R_6 and R_7. The small voltage that appears across R_7 is amplified in the phase inverter tube V_2. The output of $V_2$③ is of the same amplitude as the output of V_1 but of opposite polarity.

(3) A second form of two-tube paraphase amplifier employs the differential voltage between the outputs of the two tubes as the input signal to the phase-inverter section (fig. 148). Tube V_1 is an amplifier to increase the amplitude of the applied waveform. The cathode resistor R_2 is not bypassed in order to provide some degeneration which helps to avoid distortion. The output waveform ② is passed through C_4 and impressed on resistors R_7 and R_9, both of which have the same value of resistance as R_8. The voltage which appears across R_9 is applied to the grid of V_2. The output ③ of V_2 is passed through C_5 and applied across R_8 and R_9. Thus, half of the output of both V_1 and V_2 appears across R_9. Since these two voltages are always of opposite polarity, the resultant voltage across R_9 must be the difference between the two voltages applied. The output of V_1 must be slightly larger than the output of V_2, since the effective voltage at the grid of V_2 is the difference between the outputs of V_1 and V_2. Since this difference should be kept as small as possible, pentodes are used in order to take advantage of their very high amplification.

(4) A third form of paraphase amplifier employs coupling between the cathodes of two tubes of the same type (fig. 149). Tube V_1 is used as an amplifier to increase the amplitude of the applied signal to the desired

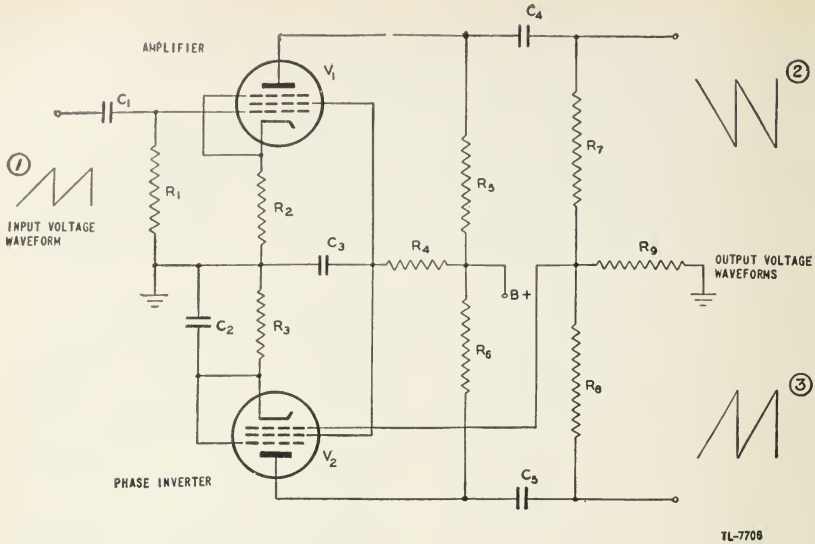

Figure 148. Paraphase amplifier which uses differential voltage divider.

level. Tube V_2 is used as an inverter and amplifier to produce a signal of the same amplitude but of opposite polarity to the output of V_1. Since the common cathode resistor, R_2, is not bypassed, the voltage which appears across it is the algebraic sum of the two plate currents and has the same shape and polarity as the voltage applied to the grid of V_1. This action is similar to that which takes place in a cathode follower, but it

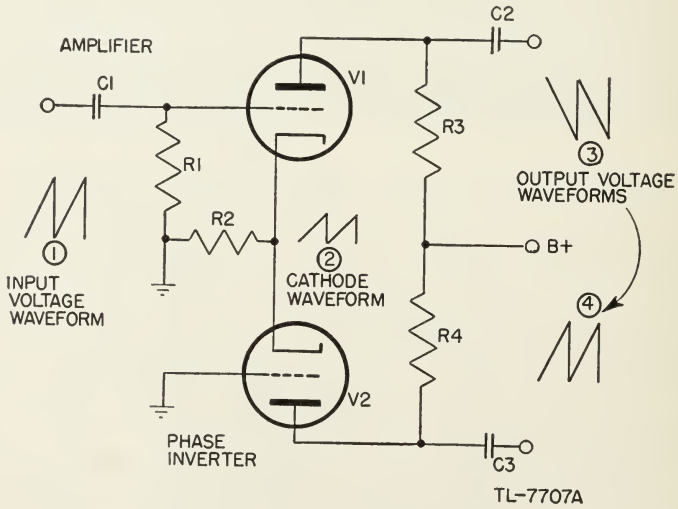

Figure 149. Cathode-coupled paraphase amplifier.

differs in two important respects: the output from the system is taken from the plates, so that although the voltage developed across R_2 is degenerative, the gain is not limited to less than unity; and the plate current of both tubes flows through resistor R_2. If R_2 is of the proper size, the

amplitude of the degenerative voltage developed across it is equal to half of the amplitude of the voltage applied to the grid. Therefore, if a signal e_i is applied to the grid of V_1, the voltage effective between grid and cathode of this tube is equal to $\frac{e_i}{2}$, and the ouput voltage of V_1 is equal to $A\frac{e_i}{2}$, where the gain of V_1 is equal to A. Since the grid of V_2 is connected to ground, the amplitude of the voltage effective between grid and cathode of this tube is the voltage developed across R_2, which also is equal to $\frac{e_i}{2}$. However, the effect of this voltage on the conduction of V_2 is the same as though a signal of the same amplitude but of opposite polarity were applied to the grid. To understand this polarity reversal, assume that the cathode of a tube is held at a fixed potential and that the potential of the grid is raised two volts. The change of plate current that results could have been caused equally well by holding the grid potential fixed and decreasing the cathode potential two volts, since such action would cause the same change of the *relative* potentials of the grid and cathode. The output of V_2, then, is equal to $-A\frac{e_i}{2}$ if the load resistance of V_2 is the same as that of V_1. Thus, the amplitudes of the two outputs are equal, but of opposite polarity.

(5) The paraphase amplifiers discussed above are examples of types of circuits. In practice, many variations in the circuit arrangements are found. For example, the circuits of both the amplifier tube and the phase-inverter tube may be compensated to maintain uniform gain over a wide band of frequencies.

42. BASIC OSCILLATORS. a. General. (1) An important use of vacuum tubes is as oscillators for the generation of alternating voltages. Vacuum tubes used for this purpose are essentially energy converters which change d-c electrical energy from the plate-circuit power supply into a-c electrical energy in the output circuit. This change is accomplished by the use of the amplifying ability of the vacuum tube in such a manner that the tube generates sustained oscillations.

(2) In figure 150, the tube is shown with a feedback network connecting plate and grid. If the tube is acting as an amplifier the energy is increased from the grid circuit to the plate circuit. Hence, part of the plate-circuit energy may be fed back to the grid and used to supply the input power. If this is done the tube supplies its own input and oscillates at a frequency determined by the constants of the circuit. The tube oscillates because any small voltage change in the plate or grid circuit can be transferred

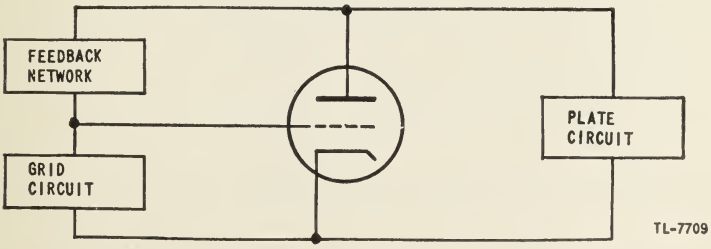

Figure 150. Oscillator circuit—schematic diagram.

from one to the other, and this change, using the amplifying ability of the tube, further increases the amplitude of the signal. The operation of the circuit causes the plate voltage to increase and decrease alternately. A maximum value of voltage variation, determined by the operating characteristics of the tube, soon is reached; the tube now is said to be oscillating with maximum power being developed. Hence, an oscillator causes the current in the plate circuit to increase and decrease around an average value. The varying plate current, when flowing through the load impedance present in the plate circuit, develops an alternating voltage across this load.

b. Feedback. (1) The feeding of a signal back to the grid circuit in phase with the input voltage so that it aids oscillations is called positive feedback or regeneration. The feeding back of a signal out of phase with the input signal in such a way as to hinder oscillations is called negative feedback or degeneration. Since the tube normally introduces a phase shift of 180°, the feedback network must provide another shift of approximately 180° to make the voltage being fed back in phase with the initial grid voltage. The following methods are employed for accomplishing this purpose. Methods (*a*) and (*b*) are usually employed for the generation of high-power radio-frequency energy.

(*a*) The use of transformers, R-C networks, L-C networks, or other circuits outside the tube and connected directly to the elements.

(*b*) The use of the interelectrode capacitance of the tube.

(*c*) The use of additional vacuum tubes.

(2) A very important aspect of regenerative feedback is that in supplying the input power of an oscillator it effectively introduces a negative resistance in the input circuit of the oscillator. Although negative resistance cannot be represented by a physical resistor, it is convenient in discussing oscillators since it represents the source from which energy is obtained to supply the losses which take place in the oscillating system. A negative resistance can be visualized as an element which *supplies* energy (in effect, a generator) instead of dissipating energy in the manner of a conventional resistor.

c. Ultraudion oscillator. (1) A type of oscillator frequently employed at ultra high frequencies is the *ultraudion* oscillator illustrated in figure 151. The required polarity inversion of the instantaneous voltage on the

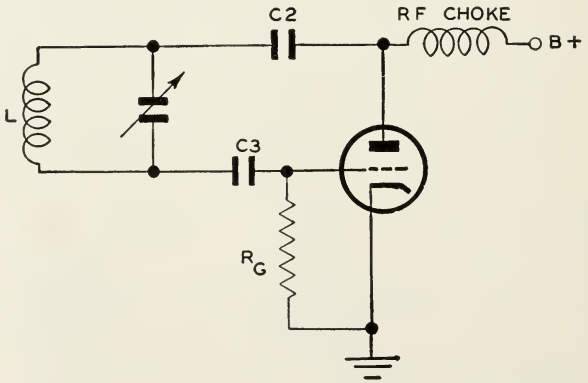

TL - 8986

Figure 151. Ultraudion oscillator.

grid with respect to the plate results from the grid and plate being connected to opposite ends of the tank circuit. The plate is parallel fed, the r-f choke preventing the alternating component of the plate voltage from entering the power supply. The blocking capacitor C_2 is large enough to be effectively a short circuit to the r-f current but is an open circuit to the direct current.

(2) This oscillator, as well as most other feedback oscillators, uses self-bias instead of fixed bias so that oscillations can start more easily. If the high negative bias required for proper operation were applied at the time the oscillator was turned on, the tube would be completely cut off and oscillations could not start. After oscillations are built up, a small charge is put on capacitor C_3 each time the lower end of the tank circuit swings positive. Part of the charge leaks off during the time when the grid is not positive relative to the cathode. The voltage to which C_3 is charged ultimately makes the grid sufficiently negative that only a small amount of charge is added to the capacitor at the peak of each cycle, and all of this small increase of charge leaks off through R_G during the remaining time of the cycle. Thus, the grid is automatically maintained at the proper bias for good operation.

(3) The ultraudion circuit is equivalent to the Colpitts oscillator as shown in figure 152. The combination of the grid-cathode capacitance and the plate-cathode capacitance forms a voltage-dividing network which, in effect, grounds one point on the tank circuit. The voltage drop across C_{GK} provides the grid excitation. The total tank capacitance consists of the tuning capacitor, C_1, in parallel with the series combination of C_2, C_{PK}, C_{GK}, and C_3. However, C_2 and C_3 are made large in order to offer negligible reactance to the *r-f* current. Thus they do not materially affect the frequency at which the tank circuit oscillates.

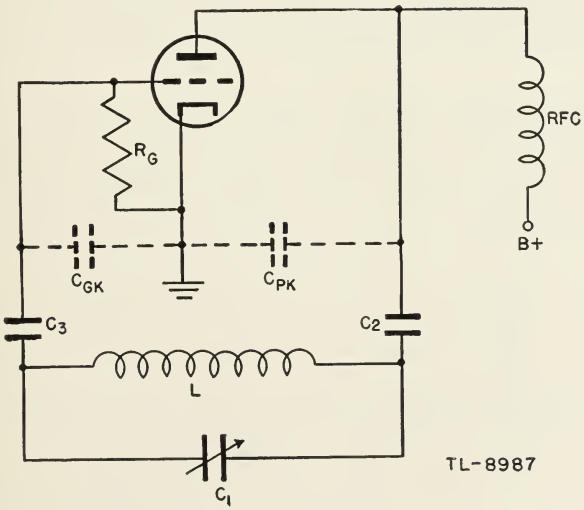

Figure 152. Voltage divider function of interelectrode capacitances in ultraudion circuit.

d. Tuned-plate tuned-grid oscillator. (1) An oscillator which employs a tuned tank circuit in both the grid and plate circuits is called a tuned-

plate tuned-grid oscillator (fig. 153). This type of circuit is sometimes referred to by the initials TPTG, of the words which describe it.

(2) The inductance in the plate tank circuit is not inductively coupled to the inductance in the grid circuit. The feedback that is necessary to maintain oscillations takes place by way of the interelectrode capacitance between the plate and the grid of the tube.

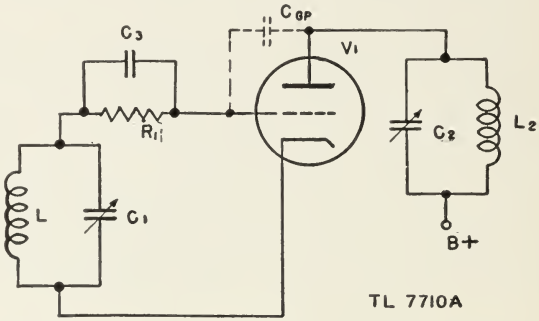

Figure 153. Tuned-plate tuned-grid oscillator.

(3) The frequency at which this oscillator operates is slightly *lower* than the natural frequency of both the plate tank (L_2 and C_2) and the grid tank (L_1 and C_1). At the operating frequency, then, both tank circuits offer inductive reactance to the flow of current. In figure 154 is shown the approximate equivalent circuit of the tuned-plate tuned-grid oscillator and the vector diagrams which explain its operation. Since both tank circuits are tuned so that they offer inductive reactance at the operating frequency, they are shown simply as inductors in figure 154①. The plate-cathode and grid-cathode interelectrode capacitances do not appear in the circuit since they are effectively incorporated in the two inductors L_P and L_G.

(4) If it is assumed that the oscillator is in operation, a voltage e_G exists at the grid which controls the plate current of the tube so that energy is delivered to the plate-tank circuit at the proper instant to reinforce the existing oscillations. The effect of this grid voltage is represented in the equivalent circuit by a generator which produces a voltage of $-\mu e_G$. In the vector diagram, figure 154②, the voltage e_G is shown 180° out of phase with the equivalent generator voltage, $-\mu e_G$. The plate current which flows in the tube is controlled by the voltage on the grid; when e_G is a maximum, i_P is a maximum, or i_P must be in phase with e_G, as shown in the vector diagram.

(5) The voltage across the tube is equal to the vector difference between $-\mu e_G$ and the voltage drop that takes place in the plate resistance. Therefore, the plate voltage, e_P, is shown in figure 154③ as the vector difference between $-\mu e_G$ and $i_P r_P$. This voltage is applied across the series combination of C_{GP} and the effective grid inductance. In order for the oscillator to operate, the reactance of the plate-grid interelectrode capacitance must be greater than the inductive reactance of the grid tank circuit. Therefore, the current that flows in the grid branch as a result of the application of e_P across it is a current i_G which leads e_P by nearly 90°, as shown in figure 154④. This current produces the voltage e_G in flowing

through the effective inductance, L_G, of the grid tank circuit. Since the voltage across an inductor leads the current through it by an angle less than 90° when resistance is associated with the inductance, the voltage e_G leads i_G by an angle somewhat less than 90°. It is apparent in figure 154(5) that the voltage e_G which is fed back is almost in phase with the plate current, so that oscillations can be maintained.

(6) It can be shown that a negative resistance is necessary for any

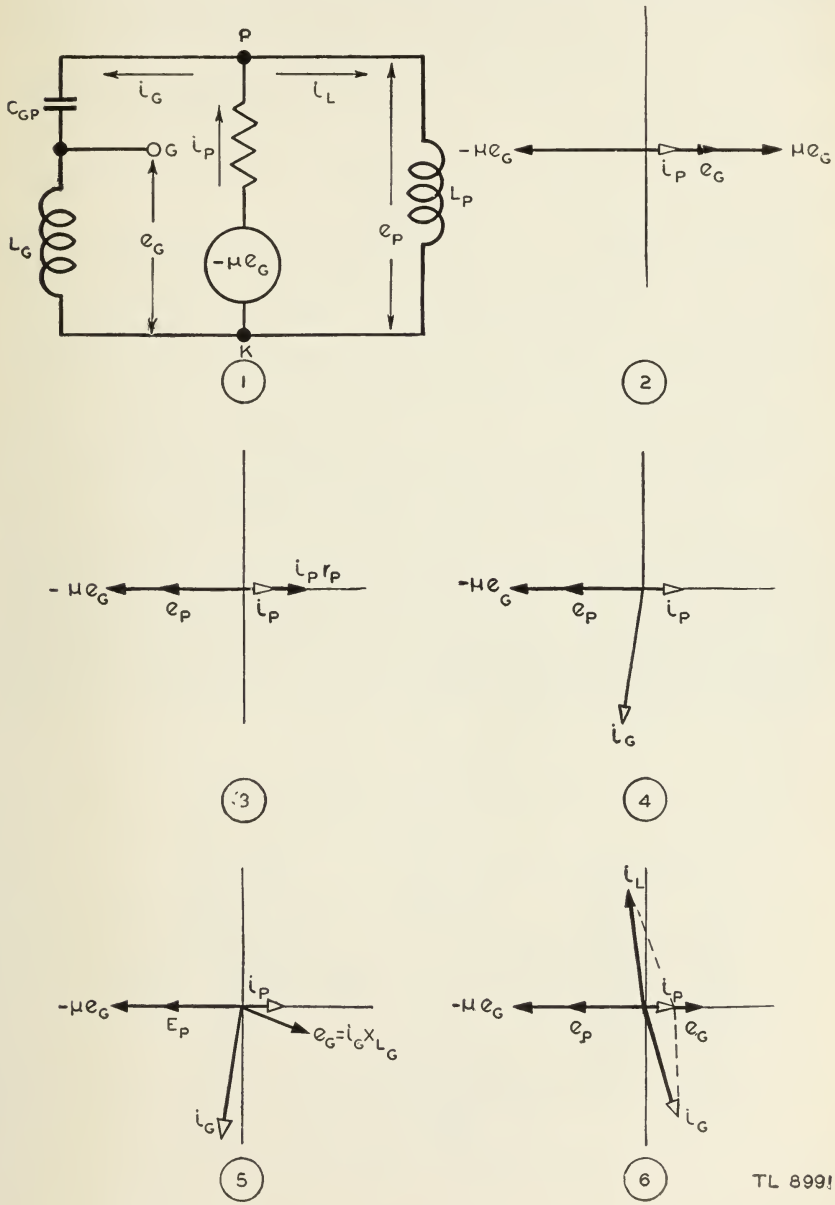

Figure 154. Analysis of tuned-plate tuned-grid oscillator.

oscillator to function. If the negative resistance present in a tuned-plate tuned-grid oscillator is considered, it can be shown that the current i_G effectively leads the plate voltage by *more than 90°*, as shown in figure 154⑥, so that the voltage e_G which is fed back from the plate is exactly in phase with the plate current.

(*7*) The conditions which must be fulfilled to cause sustained oscillations in a tuned-plate tuned-grid oscillator are, then—

(*a*) Both the grid and the plate tank circuits must be tuned to a frequency which is somewhat higher than the operating frequency so that both tuned circuits offer an inductive reactance.

(*b*) The inductive reactance of the grid tank circuit must be less than the capacitive reactance of the grid-plate interelectrode capacitance at the operating frequency.

(*c*) A negative resistance must be present, of magnitude sufficient to supply all losses that occur in the circuit.

e. Push-pull oscillator. In order to obtain a power output larger than is possible with a single tube, an additional tube may be added. This tube is usually added in "push-pull" instead of in parallel to avoid adding the interelectrode capacitances of the tubes. By this means, the tendency to generate parasitic oscillations is minimized, and the maximum frequency at which the oscillator may be operated is extended. A tuned-grid tuned-plate push-pull oscillator is shown in figure 155. It also depends upon interelectrode capacitance of each tube to feed back to the input a sufficient portion of the output to maintain oscillation. When the oscillator is first energized it is very improbable that the two tubes will be operating at every instant at exactly the same conditions. One tube passes a larger current than the other. The voltages fed back to the two grids therefore are unequal. This initial surge of energy into the two tank circuits causes an oscillation of voltage in the tank circuits as the energy is interchanged alternately between the magnetic and electric fields. First one tube and then the other conducts. In conducting, each tube contributes energy to the tank circuit at the proper time to cause the voltage across the tank circuits to increase in amplitude. The oscillations continue to increase

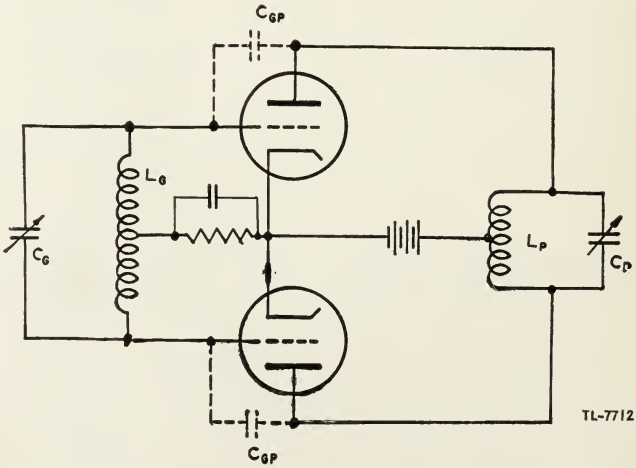

Figure 155. Push-pull oscillator.

in amplitude until the energy lost in the tank circuit itself and in the load is exactly equal to the energy supplied to the tank circuits by the tubes. The maximum amplitude of oscillation is called *saturation amplitude* since the tubes are driven into the plate-current saturation region of their characteristics.

f. Transitron oscillator (negative Gm). (1) Figure 156 shows that the characteristic curve of screen current vs. screen voltage of a pentode in which the screen is coupled to the suppressor has a portion with

Figure 156. Screen-current vs. screen-voltage characteristic of a pentode with screen suppressor coupling.

negative slope. Between the screen and screen supply, therefore, such a circuit may act like a negative resistance, and sustained sinusoidal oscillations may occur in an LC tank inserted in the screen circuit. Such an oscillator is called a transitron or negative transconductance oscillator. The basic circuit is shown in figure 157 in which the suppressor is coupled to the screen through capacitor C_c the reactance of which at

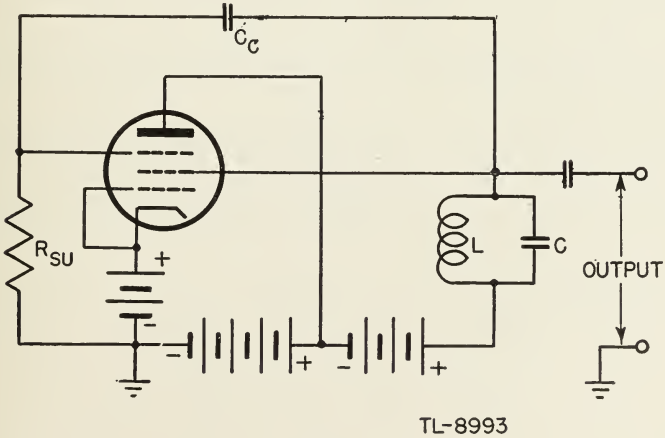

Figure 157. Elementary transitron oscillator.

the resonant frequency of the LC tank circuit, is negligible in comparison with the resistance R_{su}.

(2) The tube supplies energy to the tuned circuit to maintain oscillations as a result of the *negative transconductance* between the suppressor grid and the screen grid. In the pentode the movement of electrons from the cathode to the positive elements, the screen and plate, constitute the screen current i_{SC} and the plate current i_p. Variations in the voltage of the suppressor e_{SU} have a negligible effect on the *total* number of electrons leaving the cathode because of the shielding effect of the screen and control grid. However, the suppressor grid does affect the division of the space current between the screen and plate.

(3) An increase in the suppressor voltage results in a greater number of the available electrons passing through to the plate, increasing i_P and decreasing i_{SC}. Conversely, a decrease in the suppressor voltage results in fewer electrons passing through to the plate, decreasing i_P and increasing i_{SC}. The variations of i_p and i_{SC} with e_{SU} for the conditions under which the oscillator operates are shown in figure 158. The

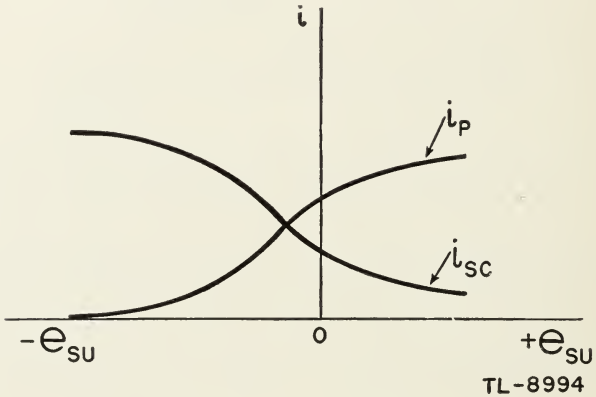

Figure 158. Plate and screen-currents as functions of suppressor voltage.

negative slope of the i_{SC} curve, that is, the decrease of i_{SC} with increase of e_{SU}, indicates that the transconductance between the suppressor grid voltage and screen current is negative. As the reactance of C_C is negligible at the frequency of oscillation, the alternating component of the suppressor voltage is the same polarity as that of the screen voltage. Thus, the negative transconductance of the tube becomes a negative resistance between the screen grid and cathode. An increase of screen voltage causes a corresponding increase in suppressor voltage and hence a decrease in screen current.

(4) The losses in the tuned circuit must be offset by energy supplied by the tube in order for oscillations to be sustained. The equivalent circuit, figure 159, illustrates the negative resistance R_n, presented by the tube to the tuned circuit, and the tuned-circuit losses R_T paralleling the LC tank. R_L represents the load connected across the output terminals. In order to produce oscillations of constant amplitude, the power supplied by R_N must equal the power consumed by all three positive resistances. Thus, the current in R_N must be equal and opposite to the

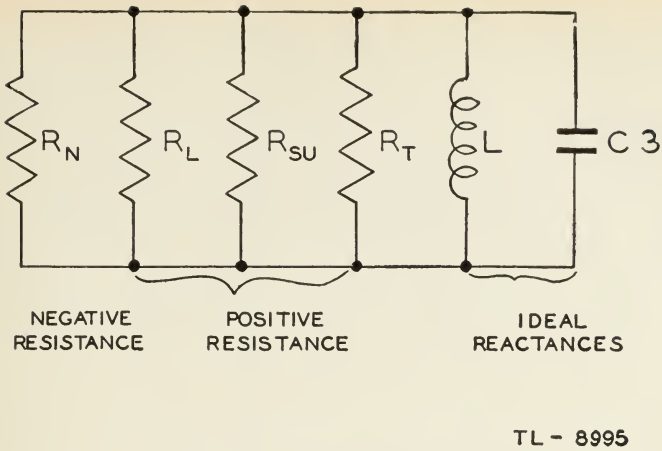

Figure 159. Equivalent circuit for transitron oscillator.

sum of the three positive-resistance currents. If R_N is larger than this value the current through it is too small and oscillations die out. If R_N is smaller than this value the current is too large and oscillations increase in amplitude.

(5) When the current through R_N is just sufficient to sustain oscillations the circuit is reduced to a simple L and C combination and the frequency of oscillation is

$$f = \frac{1}{2\pi\sqrt{LC}}.$$

(6) If the transitron oscillator is used to produce continuous oscillations the circuit is previously adjusted so that R_N is smaller than the value required to sustain oscillations. Any very brief oscillations or transients which occur at the time the plate-supply switch is closed are amplified, increasing the operating range on the i_{SC} vs. e_{SU} characteristic curve (fig. 158), and because of the curvature of the characteristic the average slope of the part used is decreased. This amounts to increasing the value of the negative resistance so that the amplitude of oscillations increases until the value of R_n is such as to maintain a constant amplitude.

43. RESISTANCE-CAPACITANCE OSCILLATORS. a. General. In an R-C oscillator, the frequency is determined by a resistance-capacitance network that provides regenerative coupling between the output and input of a feedback amplifier. No use is made of a tank circuit consisting of inductance and capacitance to control the frequency.

b. Wien bridge. (1) An oscillator in which a frequency-selective Wien-bridge circuit is used as the resistance-capacitance feedback network is called a Wien-bridge oscillator. One widely used circuit for this type of oscillator is shown in figure 160. The same circuit is shown in ① and ②. In ①, the feedback circuit is drawn to show that the phase-shifting element of the circuit is a frequency selective bridge. However, it is simpler to use the circuit as shown in ② for purposes of discussion since the feed-back paths are shown more clearly.

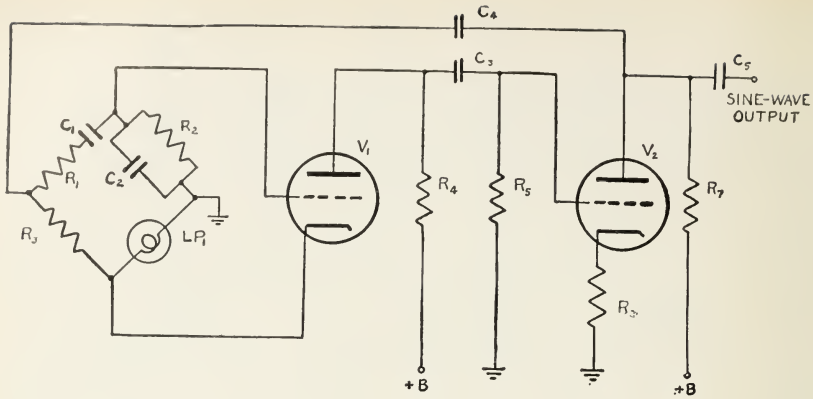

(1) CIRCUIT DRAWN TO SHOW BRIDGE CIRCUIT

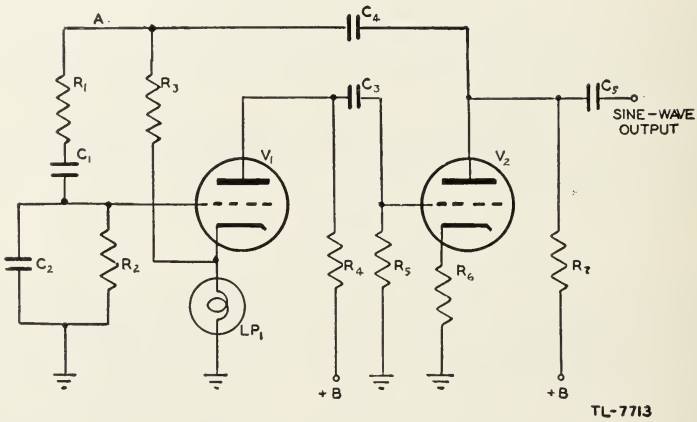

(2) CIRCUIT DRAWN TO FACILITATE DISCUSSION

Figure 160. Wien-bridge oscillator.

(2) Tube V_1 is the oscillator tube. Tube V_2 acts as an amplifier and inverter. Thus, even without the bridge circuit, this system oscillates, since any signal that appears at the grid of V_1 is amplified and inverted by both V_1 and V_2. The voltage fed back to the grid of V_1 then must reinforce the initial signal, which causes oscillations to be set up and maintained. However, the system amplifies voltages of a very wide range of frequencies. Voltages of any frequency or of any combination of frequencies can cause oscillation. The bridge circuit is used, then to eliminate feedback voltages of all frequencies except the single frequency desired in the output.

(3) The bridge allows a voltage of only one frequency to be effective in the circuit because of the degeneration and phase shift provided by this circuit. Oscillation can take place only at the frequency f_o which

permits the voltage across R_2, the input signal to V_1, to be in phase with the output voltage of V_2, and for which the positive feedback voltage exceeds the negative feedback voltage. Voltages of any other frequency cause a phase shift between the output of V_2 and the input to V_1 and are attenuated by the high degeneration of the circuit so that the feedback voltage is not adequate to maintain oscillation at a frequency other than f_o.

(4) A degenerative feedback voltage is provided by the voltage divider consisting of R_3 and the lamp LP_1. Since there is no phase shift across this voltage divider, and since the resistances are practically constant for all frequencies, the amplitude of the negative feedback voltage is constant for all the frequencies that may be present in the output of V_2. A curve of the negative feedback voltage is plotted as ① in figure 161.

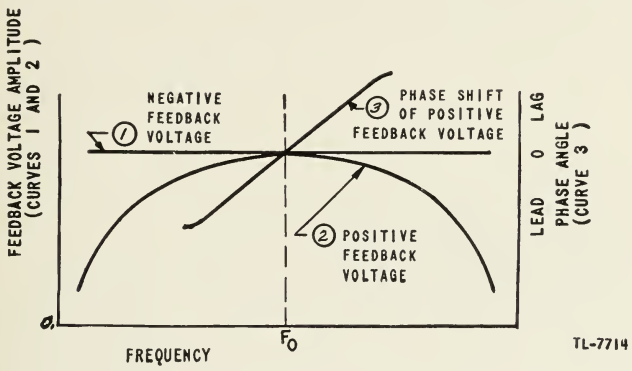

Figure 161. Frequency feedback voltages in Wien-bridge oscillator.

(5) The positive feedback voltage is provided by the voltage divider consisting of R_1, C_1, R_2, and C_2. If the frequency is very high, the reactance of the capacitors is almost zero. In this case resistor R_2 is shunted by a very low reactance, making the voltage between the grid of V_1 and ground almost zero. On the other hand, if the frequency is reduced toward zero the current that can flow through either C_2 or R_2 is reduced to almost zero by the very high reactance of C_1. Therefore, the voltage between the grid of V_1 and ground falls almost to zero. At some intermediate frequency the positive feedback voltage is a maximum, as shown by curve ② in figure 161. The curve is rather flat in the vicinity of f_o, but the phase shift that occurs in the positive feedback circuit permits only a single frequency to be generated.

(6) The voltage across R_2 is in phase with the output voltage of V_2 if $R_1C_1 = R_2C_2$. If the frequency of the output of V_2 increases, the voltage across R_2 tends to lag the voltage at the plate of V_2. If the frequency decreases, the voltage across R_2 leads the output voltage of V_2. Curve ③ in figure 161 shows the phase angle between these two voltages as the frequency of the feedback voltage is varied.

(7) The frequency at which the circuit oscillates is—

$$f_o = \frac{1}{2\pi\sqrt{R_1C_1R_2C_2}} = \frac{1}{2\pi R_1C_1}$$

At this frequency the positive feedback voltage on the grid of V_1 just equals or barely exceeds the negative feedback voltage on the cathode,

and the positive feedback voltage is of the proper phase to sustain oscillation. At any other frequency, the negative feedback voltage is larger than the positive, so that the resultant degeneration of the amplifier suppresses these frequencies.

(8) The lamp LP_1 (fig. 160) is used as the cathode resistor of V_1 in order to stabilize the amplitude of oscillation. If for some reason the amplitude of oscillation tends to increase, the current through the lamp tends to increase. When the current increases, the filament of the lamp becomes hotter making its resistance larger. A greater negative feedback voltage is developed across the increased resistance of the hotter lamp filament. Thus more degeneration is provided, which reduces the gain of V_1 and thereby holds the output voltage at a nearly constant amplitude.

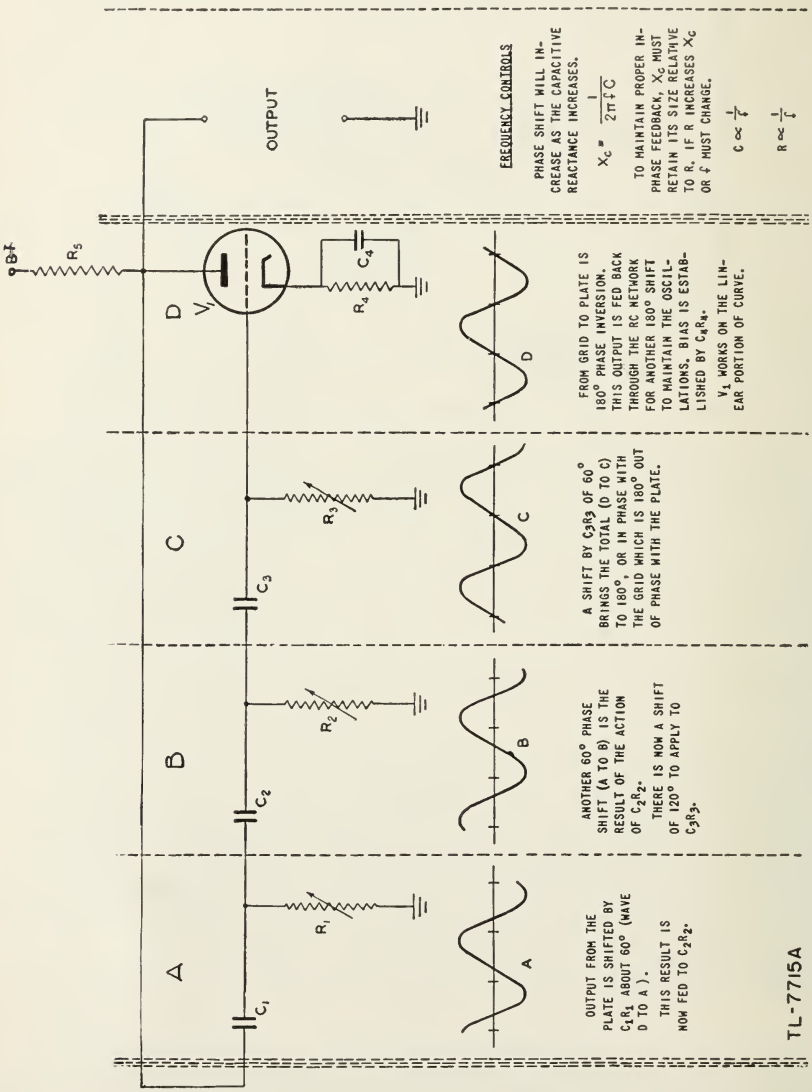

Figure 162. Phase-shift oscillator.

Since the waveform is sinusoidal only at a small amplitude of output from V_1, the lamp, or thermistor as it is sometimes called, serves also to prevent distortion of the sinusoidal waveform of the output.

(9) The Wien-bridge oscillator has many advantages over other types of audio oscillators. For instance, it may conveniently be made to produce a wide range of frequencies. The waveshape is very nearly a true sine wave. Frequency stability is excellent. Finally, the output amplitude is nearly constant over a very wide frequency range.

c. Phase-shift oscillator. (1) The phase-shift oscillator is a special type of resistance-capacitance-tuned oscillator that operates with a single tube. The circuit consists of only one amplified tube plus a phase-shifting feedback circuit which creates a phase shift in proportion to the frequency passed through it (fig. 162). The standard feedback-oscillator circuit requires that the signal from the plate be shifted 180° in order that reinforcing action can take place on the grid to make up for circuit losses. In the phase-shift oscillator this is accomplished by three resistance-capacitance sections.

(2) An **L**-section resistance-capacitance phase shifter is shown in figure 163. An alternating voltage applied to this circuit causes a current to flow in the circuit. The magnitude of this current is determined by the total impedance in the circuit. Since the impedance is capacitative, the current i leads the impressed voltage e by an angle θ shown equal to 60° in figure 163② and ③. The voltage drop e_R which occurs across resistor R is in phase with the current that flows through it. Therefore, e_R must lead the impressed voltage by an angle θ. If the output of this **L**-section is impressed on a second similar phase shifter, the phase of the output voltage is shifted an angle θ again. The output of this second phase shifter is then leading the first input voltage by an angle 20.

(3) If the resistance of R is varied, the phase angle of the current

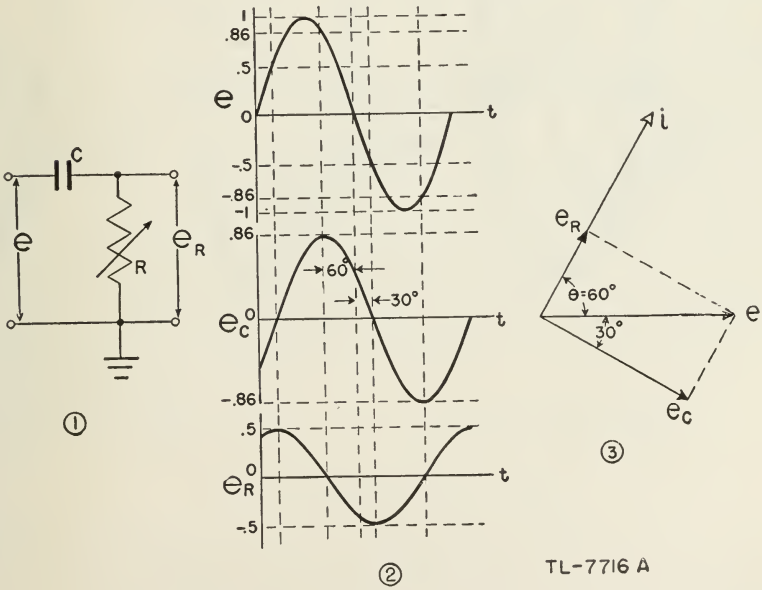

Figure 163. L-section R-C phase shifter.

flowing in the circuit also is varied. If R is reduced to zero, the phase angle of the current is 90°, but this action is useless since there is no resistor across which to develop a useful voltage. It is not possible, then, to get a 90° phase shift in a single **L**-section of this type.

(4) In order to obtain a phase shift of 180°, three **L**-sections must be put in series. Because the reactance of a capacitor varies with frequency, the combination of three **L**-sections gives a 180° phase shift at only one frequency. This enables the circuit of figure 162 to operate at only one frequency.

(5) The oscillations are started by any circuit change such as a plate-supply ripple or random tube noise. When a disturbance occurs, the slight change is amplified, inverted 180° at the plate, and inverted another 180° by the R-C network to be returned in phase to the grid of the tube for reamplification. The cumulative build-up is repeated until the tube cannot amplify further because of plate-current saturation.

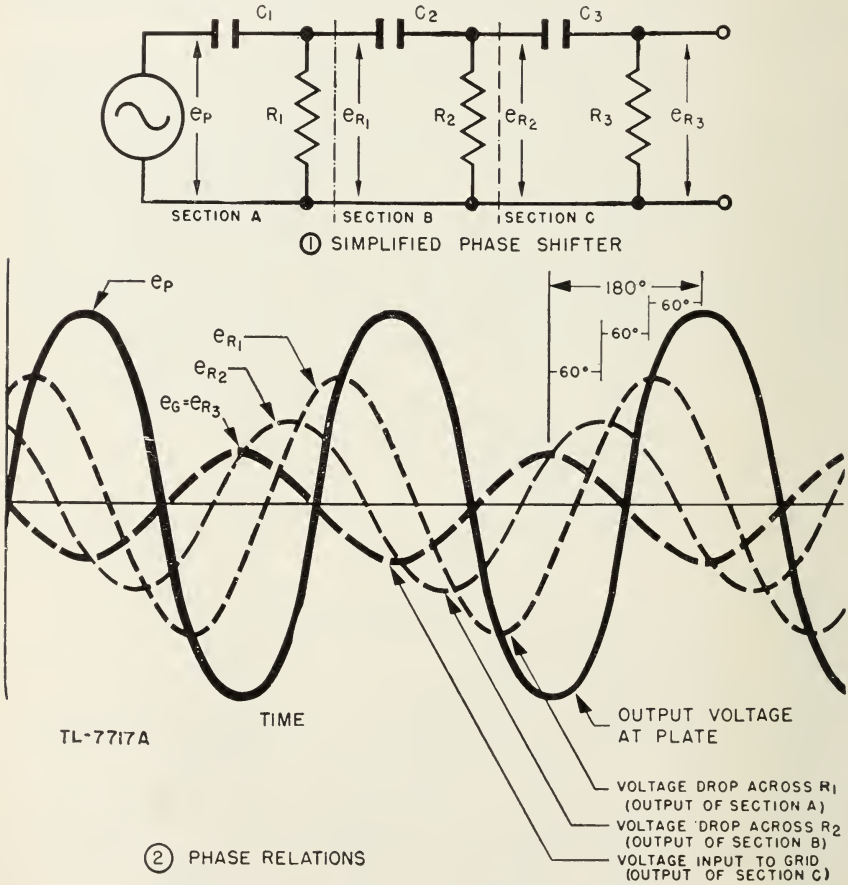

Figure 164. Phase-shifting circuit.

(6) If each of the three **L**-sections *A*, *B*, and C (fig. 164①) produces a 60° phase shift, the input voltage to the grid of the tube is shifted 180° relative to the output voltage at the plate. The output of section A leads the plate voltage by 60°. If the output of section A is impressed on sec-

tion B, the output of this circuit leads the plate voltage by two times 60° or 120°. In the same way, section C adds another 60° shift in phase and the input to the grid therefore leads the output from the plate by 180°.

(7) The waveform of the output of the phase-shift oscillator is very nearly sinusoidal if the bias on the tube is adjusted to a value which barely allows oscillations to be maintained. The frequency stability of the circuit is then also very good.

(8) The phase-shift oscillator is useful primarily in applications where a fixed frequency is desired, but the frequency can be changed by changing any of the phase-shifting capacitors or resistors. In order to *increase the frequency,* either the resistance or the capacitance must be *decreased.* To *decrease the frequency,* the resistance or capacitance must be *increased.* The angle that each L-section shifts the phase is dependent on the ratio of $\frac{X_c}{R} = \frac{1}{2\pi fCR}$. If the value of this fraction is to remain constant, either C or R must be increased when the frequency is decreased.

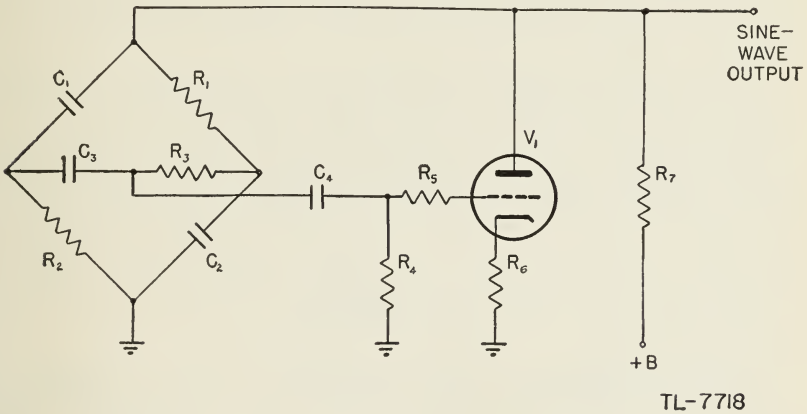

Figure 165. Bridge-type phase-shift oscillator.

(9) Another type of phase-shift oscillator is shown in figure 165. The bridge circuit, consisting of R_1, R_2, R_3, C_1, C_2, and C_3, is so proportioned that at only one frequency the output voltage, across R_4 is 180° out of phase with the voltage at the plate of the tube. The reactance of the several capacitors involved changes sufficiently with a change of frequency that the phase shift produced is 180° at only one frequency. Voltages of other frequencies therefore are fed back to the grid out of phase with the existing grid signal, and are canceled by being amplified out of phase.

SECTION VII

SPECIAL CIRCUITS

---

44. LIMITING CIRCUITS. a. General. (1) The term *limiting* refers to the removal by electronic means of one extremity or the other of an input wave. Circuits which perform this function are referred to as *limiters* or *clippers.*

(2) Limiters are useful in wave-shaping circuits where it is desirable to square off the extremities of the applied signal. A sine wave may be applied to a limiter circuit to obtain a rectangular wave. A peaked wave may be applied to a limiter to eliminate either the positive or the negative peaks from the output. In frequency modulation receivers, where it is necessary to limit the amplitude of the signal applied to the detection system to a constant value, limiter circuits are employed. Limiters find application as protective devices in circuits in which the input voltage to a stage must be prevented from swinging too far in the positive or the negative direction.

b. Series-diode limiting. (1) The characteristics of a diode are such that the tube conducts only when the plate is at a positive potential *with respect to the cathode* or, in other words, when the cathode is negative with respect to the plate. If the cathode is held at ground potential the plate need only be positive with respect to ground for current to pass through the diode. A positive potential may be placed on the cathode, in which case the tube does not conduct until the voltage on the plate rises above an equally positive value. Likewise the cathode may be held at a negative potential and the tube conducts while the plate is positive and continues to conduct while the plate is at a negative potential which is less negative than the cathode. As the plate becomes more positive with respect to the cathode the current through the tube increases and the plate-to-cathode resistance decreases rapidly from an open circuit to an average value on the order of 500 ohms.

(2) The series-diode limiter shown in figure 166 is commonly used to limit the positive half of a sine wave. The rectifying characteristics of the diode are utilized so that it may be considered as a switch. This is justified if the value of R is very large as compared to the resistance of the diode when conducting. Thus in figure 166 the output voltage remains at zero throughout the positive half cycle of the input since the diode switch is open and no current flows through R. During the negative half cycle, on the other hand, the cathode is negative with respect to the plate

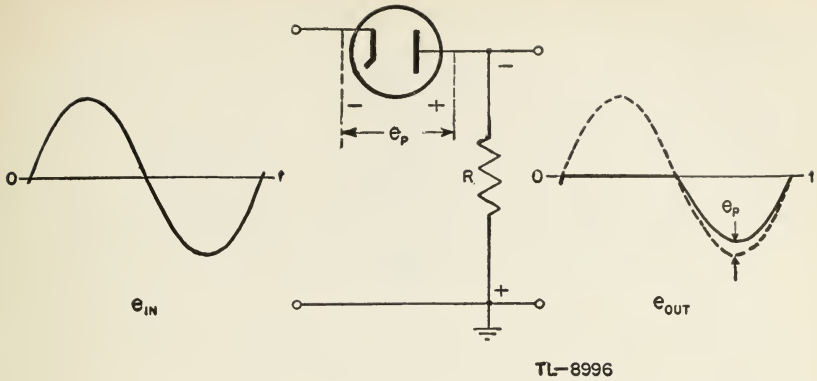

Figure 166. Series diode used to limit positive signals.

and the tube conducts. The switch is closed and the output voltage developed across R follows the applied voltage and, neglecting the very small drop across the tube e_P, is essentially equal to it.

(3) In a similar manner the same circuit, with the diode connections reversed, may be used to limit the negative swing of the input voltage. This application is illustrated in figure 167. The diode switch is closed during the positive swing of the input voltage and is open during the negative swing. Thus a voltage is developed across R during the positive half cycle only.

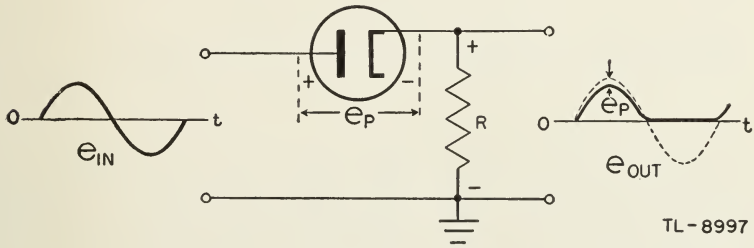

Figure 167. Series diode used to limit negative signals.

c. Parallel-diode limiting. (1) An alternate method of employing diodes in limiter circuits is shown in figure 168. The tubes in the two circuits ① and ② are connected in parallel with the load, which is assumed to be a very high impedance so that the output current is negligible.

(2) In figure 168① the diode is connected so as to limit the positive signals at approximately ground potential. Since the cathode is held at ground potential, the diode conducts throughout the entire positive half cycle. Current flows through the tube and through the series resistor R. As R is large as compared to the plate-to-cathode resistance of the diode, essentially the entire input voltage is developed across R and the output voltage is only the very low voltage drop across the diode, e_P. This may be a negligible positive voltage depending on the ratio of R to the diode resistance. On the negative swing of the input the diode does not con-

duct; thus no current flows through R and the output voltage equals the input.

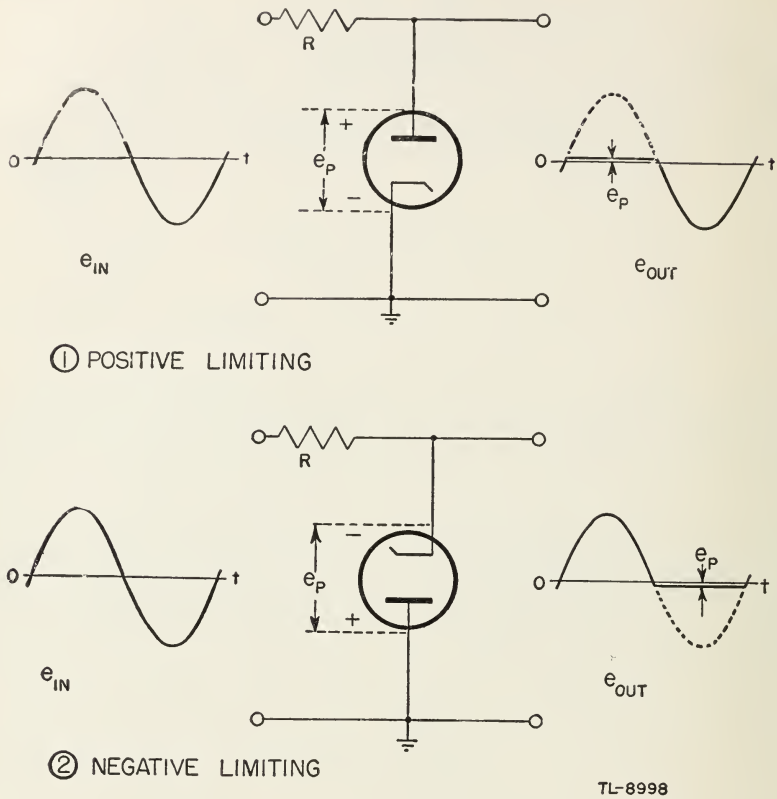

Figure 168. Parallel-diode limiter circuits.

(3) In figure 168② the plate of the diode is held at ground potential so that the tube does not conduct during the positive half cycle. Thus the output voltage equals the input. During the negative half cycle of the input voltage the cathode is negative with respect to the plate and the diode conducts. The diode current flows through the series resistance R across which essentially the entire input voltage is developed. The output voltage is limited to the very low voltage drop across the tube. This low negative voltage as a rule may be neglected and in this and the previous examples the outputs may be considered as being limited at essentially ground potential as a result of the switching action of the diode.

(4) An input voltage can be limited to any desirable positive or negative value by holding the proper diode electrode at that voltage by means of a battery or a biasing resistor. In figure 169 two such circuits are shown.

(5) The cathode of the diode in figure 169① is more positive than the plate by the value of E when no signal is applied at the input. As long as the input voltage remains less positive than the battery voltage, E, the diode acts as an open switch and the output equals the input. If the input increases to a value greater than E, the diode conducts and

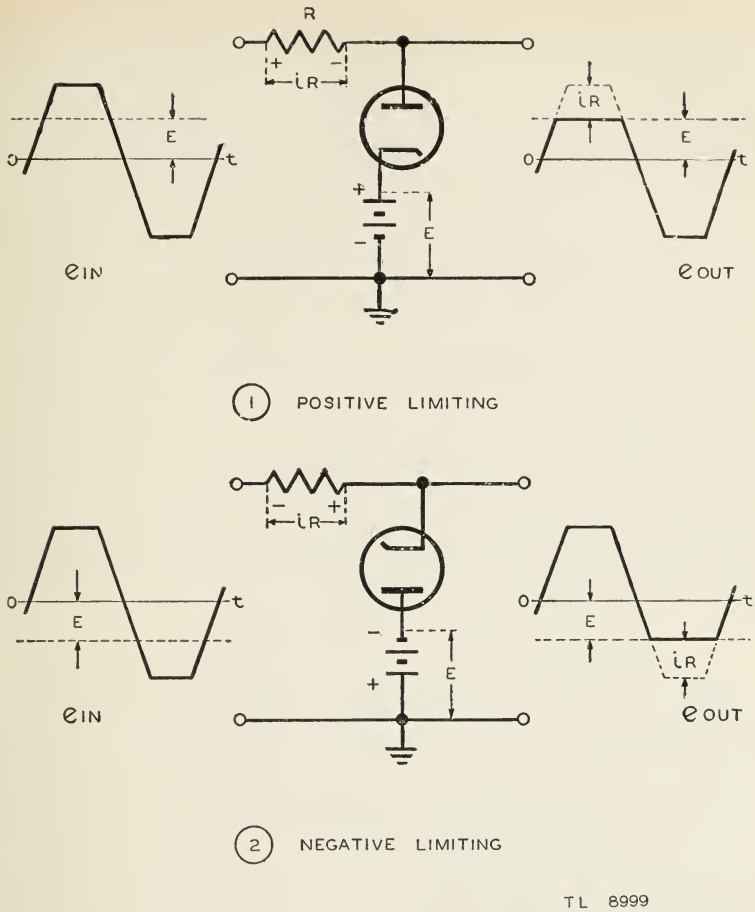

Figure 169. Parallel diodes limiting above and below ground.

behaves as a closed switch which effectively connects the upper output terminal to the positive terminal of the battery. Thus during this portion of the input cycle the output voltage equals E and the difference between e_{IN} and E appears as an iR drop across the resistor R, neglecting e_P.

(6) The plate of the diode in figure 169② is negative by the value of battery voltage E. Thus as long as the input is positive or is less negative than E the diode is an open switch and the output voltage e_{OUT} is equal to the input. When the input becomes more negative than E the diode conducts and effectively connects the upper output terminal to the negative terminal of the battery. During this portion of the input cycle, e_{OUT} equals E and the difference between e_{IN} and E appears as in iR drop across R.

(7) It is sometimes desirable to pass only the positive or negative extremity of a waveform on to a succeeding stage. To accomplish this the parallel-diode limiters shown in figure 170 can be employed. In ① the entire portion of the input waveform above the negative potential E causes the diode to conduct, thus producing an output voltage which

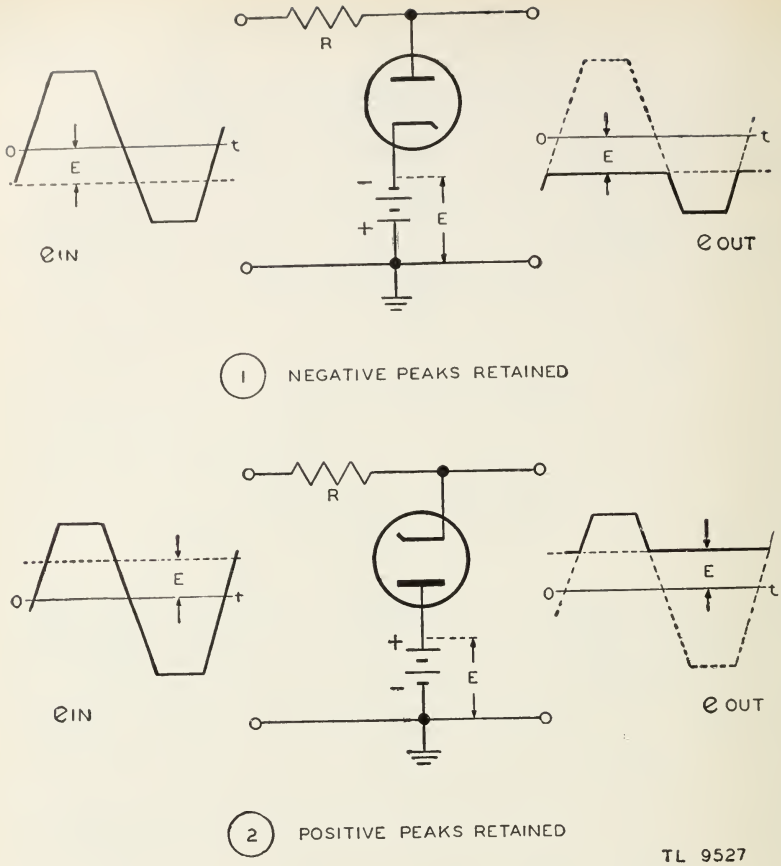

Figure 170. Parallel-diode limiters which pass peaks only.

varies between the negative level of E and the negative extremity of the input. In (2) the diode conducts during the entire portion of the input waveform which is below the positive potential of E. The output voltage then varies between the positive level of E and the positive extremity of the input waveform. In either case the difference between the value of E and e_{IN}, during the time the diode conducts, is represented by the iR drop across the series resistor R.

d. Double-diode limiting. It is possible to limit both amplitude extremities of an input waveform at any desirable levels by placing two diodes

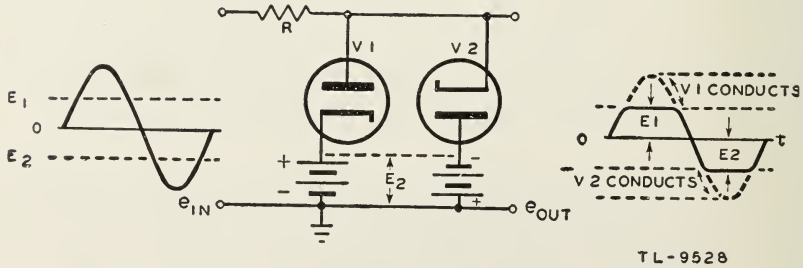

Figure 171. Double-diode limiter circuit.

in parallel in the limiter circuit. In figure 171, the diode V_1 is made to conduct whenever the input voltage e_{IN} reaches a higher positive value than E_1, thus limiting the positive half-cycle to the value of E_1. The diode V_2 is made to conduct whenever the input reaches a higher negative value than E_2, thus limiting the negative half-cycle to the value of E_2. The circuit represents a simple method of producing a satisfactory square-wave output with a sine-wave input voltage.

e. Grid limiting. (1) The grid-cathode circuit of a triode, tetrode, or pentode may be employed as a limiter circuit in exactly the same way as the plate-cathode circuit of the diode limiter illustrated in figure 168① and 169①. By inserting a series grid resistor, as shown in figure 172, which is very large compared to the grid-to-cathode resistance when grid current flows, essentially the entire positive half-cycle of the input voltage is limited to the voltage level of the cathode. For example, the grid-to-cathode resistance may drop from an infinite value, when the grid is negative with respect to the cathode, to a value on the order of 1,000 ohms, when the grid attempts to become positive with respect to the cathode. If a 1-megohm resistor is placed in series with the grid, the drop across the 1,000-ohm R_{GK} is negligible as compared to that which is developed across the 1-megohm resistor by the flow of grid current.

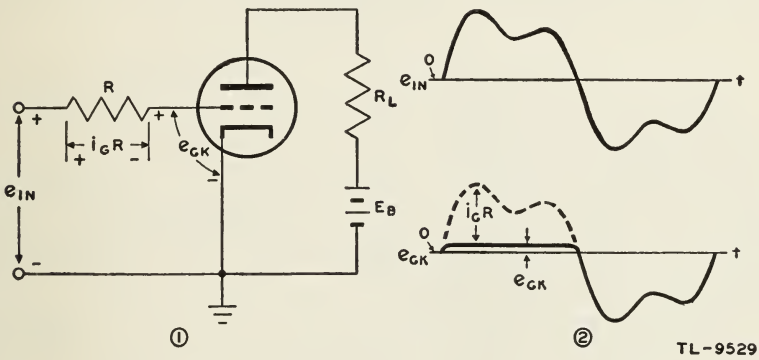

Figure 172. Unbiased grid-limiter circuit.

(2) The grid limiter circuit shown in figure 172① is held normally at zero bias. During the positive portion of the input signal the grid attempts to swing positive. Grid current flows through the resistor R, developing an i_GR drop of such polarity as to oppose the positive input voltage. Since the full input voltage must appear as the sum of the drop across R and R_{GK}, the larger R is with respect to R_{GK}, the nearer the voltage on the grid is limited to that of the cathode. The i_GR drop may be considered as an automatic bias developed during the part of the input which causes grid current to flow.

(3) Alternate circuits for limiting the positive peaks of the input voltage are shown in figures 173 and 174. In figure 173① the tube is biased by the negative potential E supplied to the grid, with the cathode returned to ground. No grid current flows until the input signal e_{IN} rises sufficiently to equal and effectively remove the biasing voltage E. Any further rise of e_{IN} drives the grid positive with respect to the cathode,

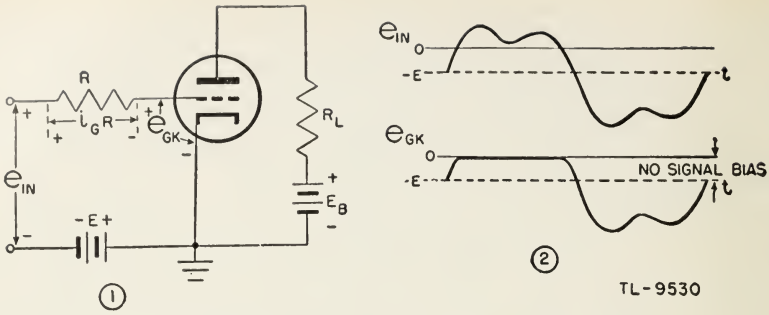

Figure 173. Grid limiter with cathode grounded and grid biased by negative voltage.

and grid current flow limits the signal on the grid by virtue of the $i_G R$ drop across R.

(4) In figure 174① bias is developed between grid and cathode by the flow of plate current through the cathode resistance R_K which is bypassed by the large capacitor C_K. The grid is held normally at ground potential and thus is negative with respect to the cathode. Any positive

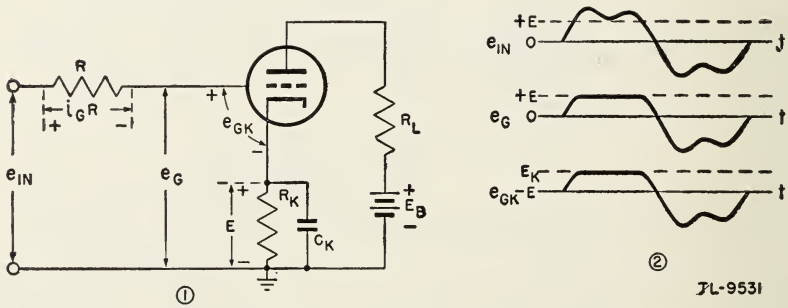

Figure 174. Grid limiter with automatic cathode bias.

signal e_{IN} must drive the grid positive by an amount equal to the value of E before the biasing effect of R_K is removed. This is shown by the e_G waveform in figure 174②. A further rise of the input voltage produces grid current which results in the limiting of the voltage at the grid. The grid-to-cathode voltage e_{GK} in figure 174② illustrates the effect of R in preventing the grid from swinging appreciably above the cathode potential.

f. Saturation limiting. (1) Whenever a series-limiting resistor is used in the grid circuit the grid cannot be driven to an appreciable positive voltage and, despite the positive amplitude of the input voltage, the maximum plate current which flows is that determined by the plate supply E_B and the resistance of the plate circuit at zero bias. Thus the minimum plate voltage is determined by the limiting action in the grid circuit. These plate current and plate voltage relationships are shown in figure 175.

(2) The grid-limiting resistor may be omitted, if the input signal comes from a low-impedance high-power source, and limiting in the plate cir-

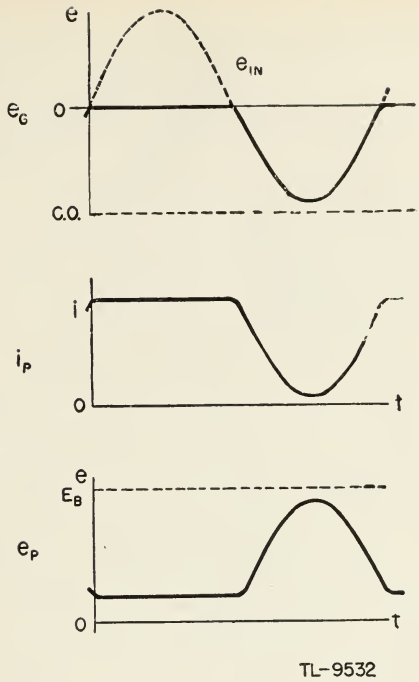

Figure 175. Effect of grid limiting on plate current and plate voltage.

cuit may still be realized. This is due to plate-circuit saturation and is usually referred to as *saturation* limiting. Plate-current saturation should not be confused with emission saturation since in tubes using oxide-coated cathodes there is no definite saturation value of emission current.

(3) By using a large value of plate-load resistance R_L and a low plate-supply voltage E_B, saturation limiting may be produced by a relatively low amplitude of positive grid voltage. In any case, however, the plate current can never exceed the value E_B/R_L. In an actual circuit some small positive voltage must remain on this plate to attract electrons from the cathode, and the saturation plate current never quite equals E_B/R_L. In other words there remains across the tube a low voltage drop when the plate current is at saturation, since the plate-to-cathode resistance at saturation does not decrease to zero.

(4) In figure 176 the i_P vs. e_P characteristic of a triode ① is used to illustrate the effect of saturation limiting on the plate voltage. The input signal applied to the grid ②, which is normally at zero bias, is not of sufficient amplitude to drive the tube to cut-off on the negative swing but causes the plate current to saturate on the positive swing. The dotted extension of the load line describes the tube during the positive position of the input cycle. The maximum plate current ③ cannot exceed the value E_B/R_L no matter how high the amplitude of the positive grid signal, and is actually slightly less because of the low-saturation plate resistance which remains in the series with the load. The maximum plate current defines the lowest value to which the plate voltage can fall ④. During

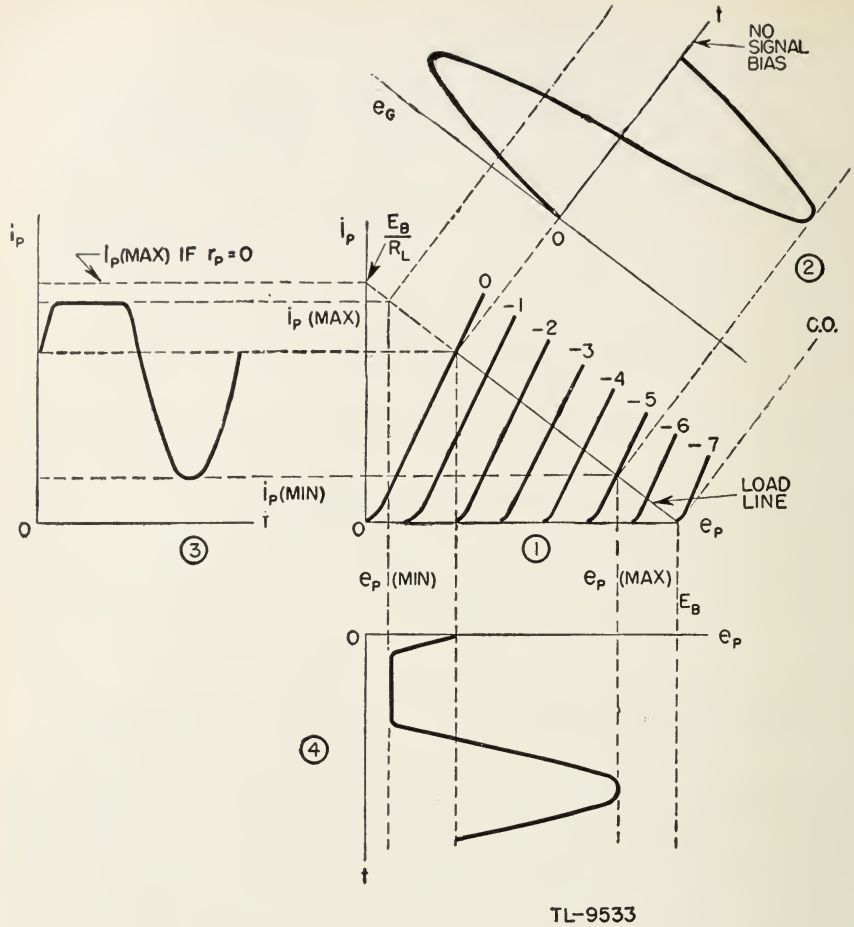

Figure 176. Tube characteristics (i_p vs. e_p) illustrating saturation limiting.

the remaining portion of the input cycle the grid controls the flow of plate current which in turn determines the shape of the plate-voltage waveform.

(5) The results of saturation limiting are similar to those of grid limiting in that the negative-going portion of the plate voltage is affected. These are compared in figure 177. Saturation limiting has the advantage of producing an output wave of greater amplitude, but it has the disadvantage of requiring considerably more power to drive the grid.

g. Cut-off limiting. (1) Electron current through a vacuum tube can flow only from cathode to plate and not from plate to cathode. Therefore, plate current cannot become a negative value. When the grid is driven to cut-off the plate current is decreased to zero and remains at zero during the time the grid is below cut-off. Since no current flows through the plate circuit when the tube is cut off there is no voltage developed across the load resistance and the plate is maintained at the full value of the plate-supply voltage. Thus a type of limiting is achieved in which

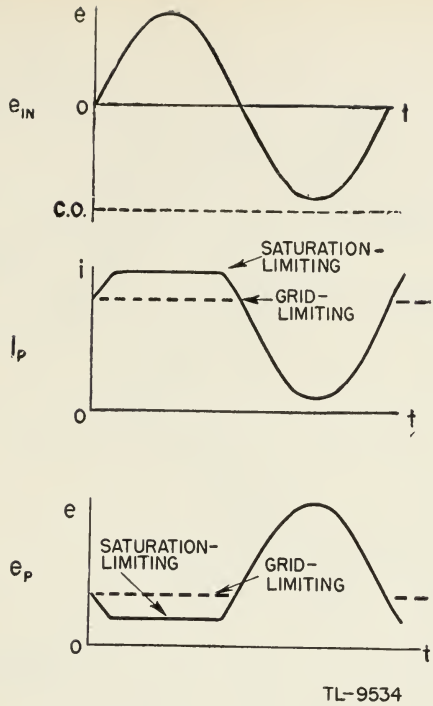

Figure 177. Comparison of grid and saturation limiting.

the positive extreme of the plate waveform is flattened as a result of driving the grid beyond cut-off.

(2) The cut-off voltage may be defined as the negative voltage, with respect to the cathode, to which the grid must be driven in order to prevent the flow of plate current. For any given type of tube this voltage level is a function of the plate-supply voltage and in the case of *triodes* may be approximated by the expression

$$E_{CO} = \frac{E_B}{\mu}$$

where E_B is the plate supply voltage and μ is the amplification factor of the tube. This relation is *not* valid in the cases of tetrodes and pentodes.

(3) In figure 178 the i_P vs. e_P characteristic of a triode is used to illustrate the limiting effect caused by driving the grid of an amplifier beyond cut-off. The grid normally is biased to —5 volts by the steady drop across R_K, ①. The value of E_B is such that the cut-off potential E_{CO} is —7 volts. The maximum amplitude of the input voltage is 4 volts; thus the grid voltage ③ swings in a positive direction from —5 volts to —1 volt and in a negative direction from —5 volts to —9 volts. During the time that the grid voltage remains below cut-off the plate current remains at zero and the plate voltage is held at the level of E_B.

(4) A combination of grid-limiting and cut-off limiting may be employed in an amplifier circuit to produce a square wave from a sine wave.

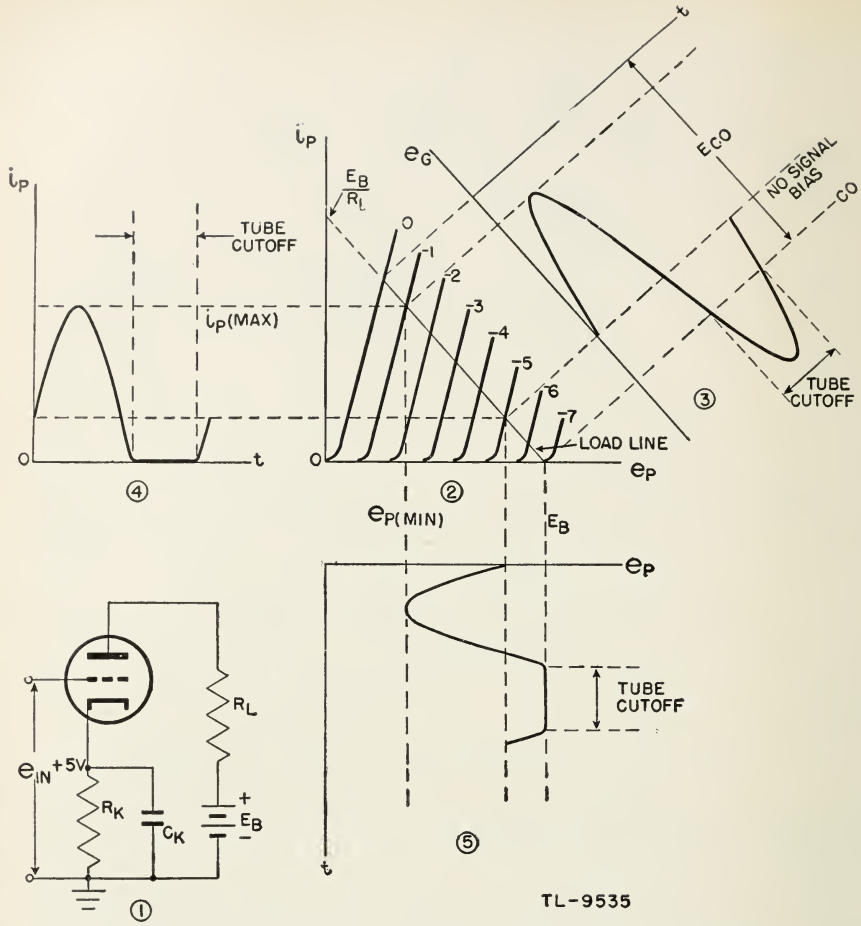

Figure 178. Squaring top of plate voltage by cut-off limiting.

This is illustrated in figure 179. The amplitude of the input voltage is sufficiently high to hold the grid beyond cut-off for the greater part of

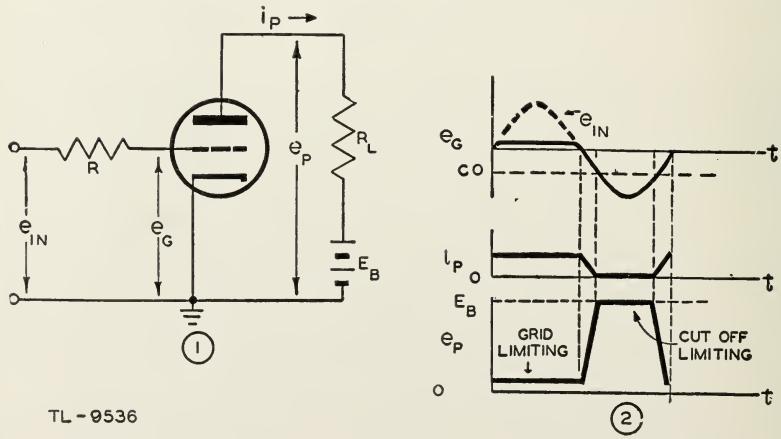

Figure 179. Formation of a square wave by grid and cut-off limiting.

the negative swing. The grid resistor R is on the order of 1-megohm and limits the grid voltage essentially to zero during the positive swing.

h. Overdriven amplifier. (1) An amplifier circuit in which *saturation-limiting* is employed in conjunction with *cut-off limiting* to produce a rectangular wave from a sine wave is generally known as an *overdriven amplifier*. The driving circuit for such an amplifier should have a relatively low-output impedance and be capable of delivering power, as considerable current is drawn during the positive swing of the grid. The value of the load resister R_L is made as large as practicable for the plate-voltage supply available.

(2) Figure 180 illustrates the grid-voltage, plate-current, and plate-voltage relationships as determined by the i_P vs. e_P characteristics and the circuit constants of the overdriven amplifier.

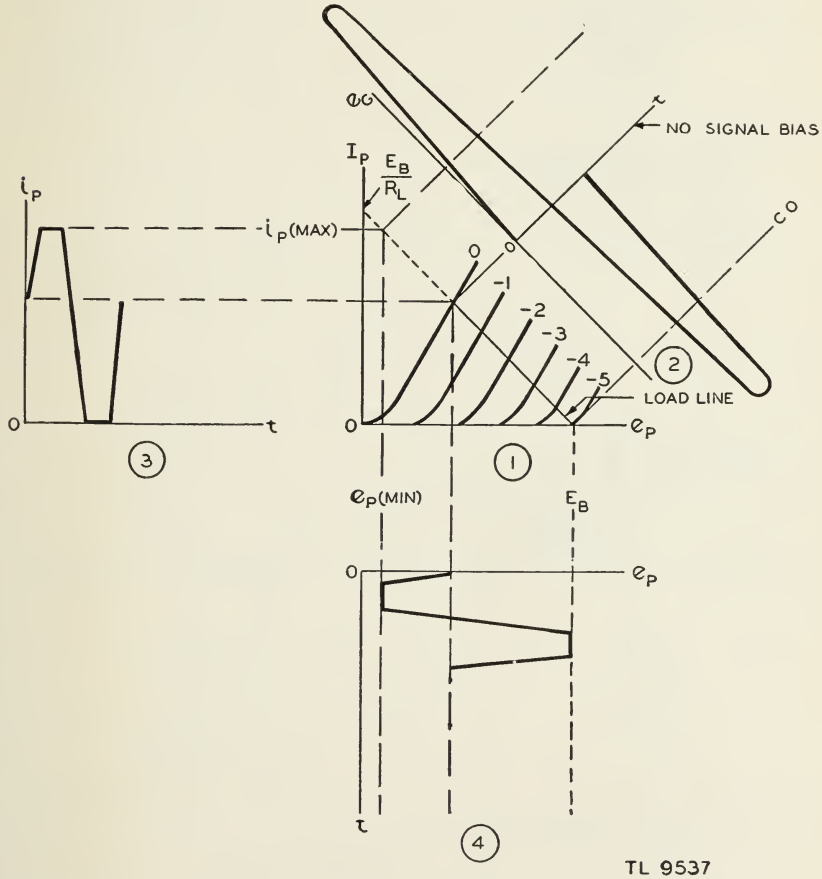

Figure 180. Formation of a square wave by saturation and cut-off limiting.

i. Limiter applications. (1) In radar work, very narrow pulses often are required to start oscillators into action, to force grids above cut-off so that the tube may conduct for a short period, or to modulate radio frequencies into brief pulses. Alternately positive and negative pulses,

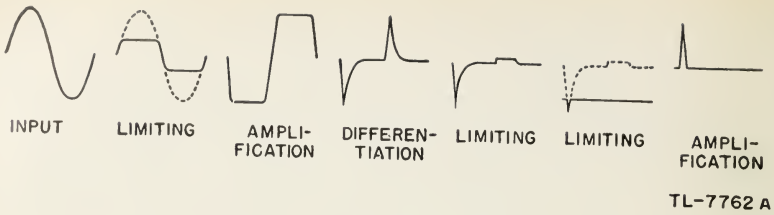

Figure 181. Formation of narrow pulse by successive stages of special radar circuits.

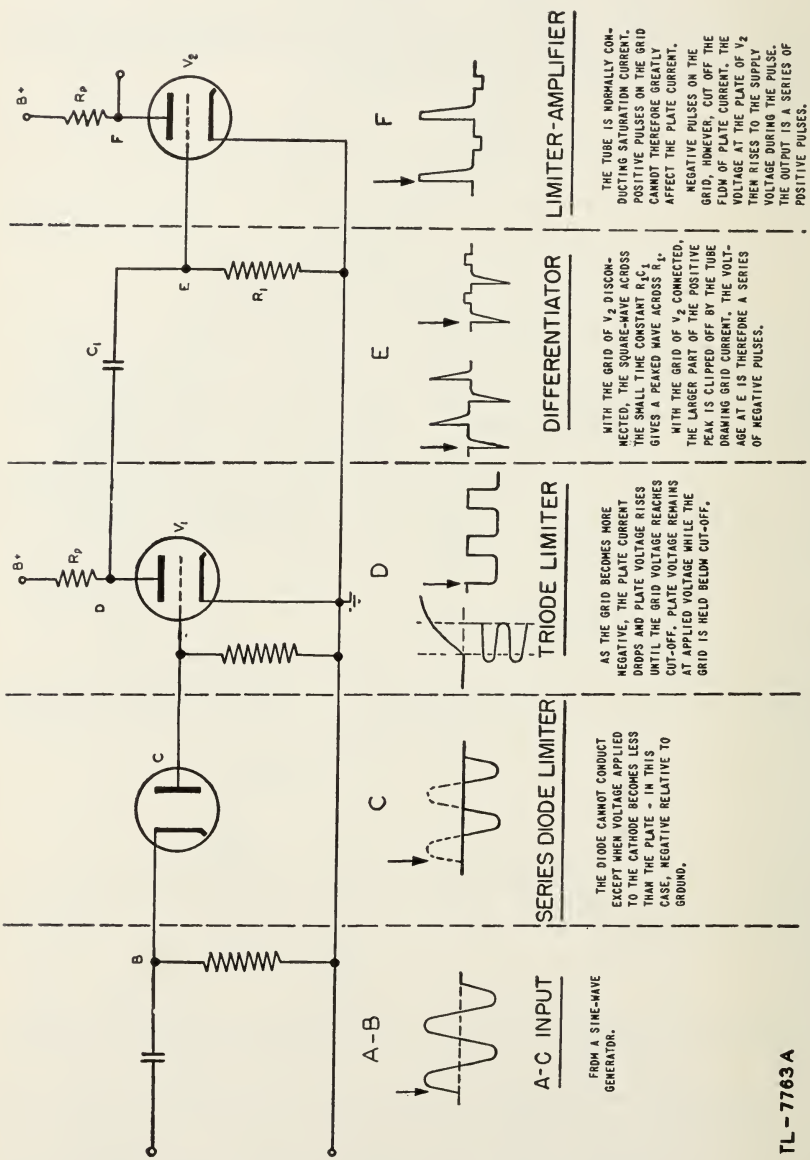

Figure 182. One method of squaring and peaking.

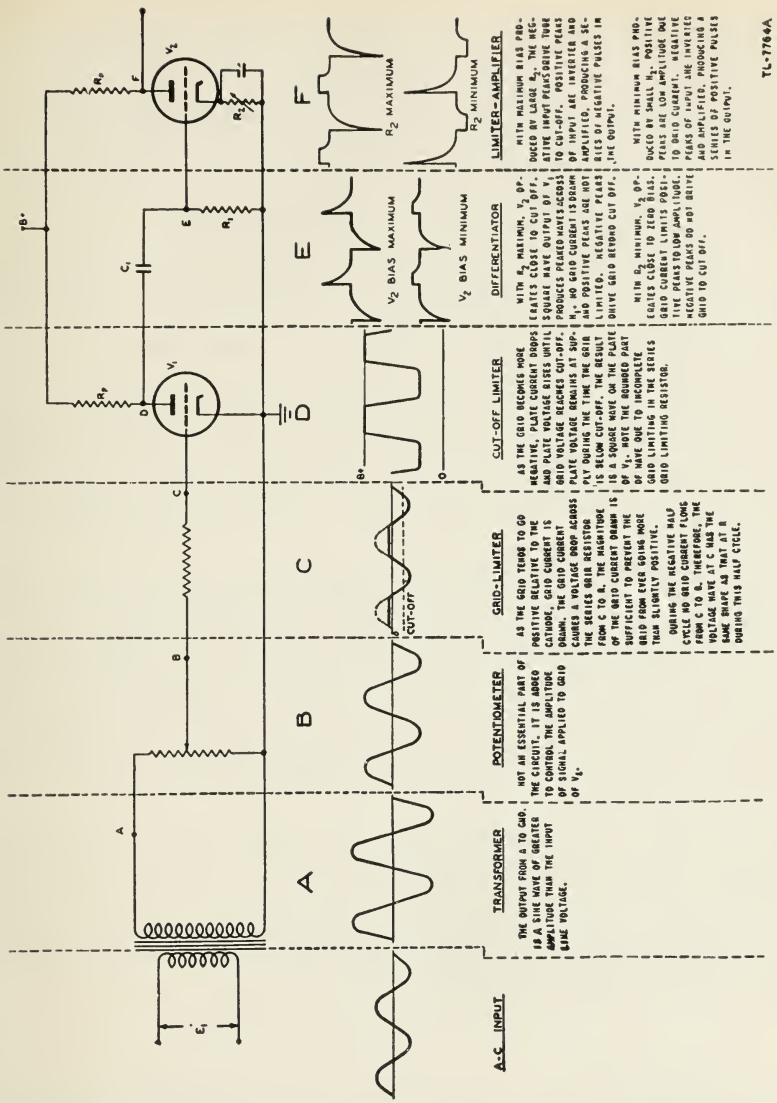

Figure 183. Another method of squaring and peaking.

obtained in various ways, may be passed through a limiting circuit to obtain pulses which are either positive or negative with respect to a reference value. This reference level may be at zero voltage or any positive or negative potential. By alternate stages of amplification and limiting, the pulse may be narrowed to any width desired. A typical series of such actions is illustrated in figure 181.

(2) Limiting and differentiating circuits can be used in combination to change sine waves into square waves into peaked waves, and then to limit the peaks of the resultant waveform. Two such circuits are shown in figures 182 and 183. These circuits are similar but use different means

to accomplish the wave squaring. At point D a square wave of the same frequency as the sine-wave input may be extracted. The output of the circuit in figure 182 has the more symmetrical square wave because its series-diode limiter has a more definite limiting point compared to a grid-limiting resistor. At point E in figure 183, a double-peaked output may be obtained, if the time constant is short and the bias on V_2 is sufficient to prevent the grid from drawing current. At point F, with a large value of R_2, a series of negative pulses is produced. If R_2 is very small, a series of positive pulses is produced at the output of V_2.

45. CLAMPING CIRCUITS. a. General. (1) A circuit which holds either amplitude extreme of a waveform to a given reference level of potential is called a *clamping circuit;* the terms *d-c restorer* and *baseline stabilizer* also are commonly used. Such circuits are divided roughly into two classifications. The first, *diode and grid clamping,* clamps *either* amplitude extreme and allows the waveform to extend in only one direction from the reference potential. The second, *synchronized clamping,* maintains the output potential at a fixed level until a synchronizing pulse is applied, when the output potential is allowed to follow the input. At the end of the synchronizing pulse the output voltage is returned immediately to the reference level.

(2) To demonstrate the utility of clamping circuits, a brief review of the action of coupling networks is useful. In coupling between stages in radio and radar circuits a coupling capacitor almost always must be used to keep the high positive d-c plate potential of the first tube isolated from the grid of the second tube. It is desirable that only the *varying* component of the plate potential be transmitted to the grid as a signal varying above and below some fixed reference level. If the lower end of the grid-leak resistor is grounded, the signal varies about ground. If a biasing potential is employed, the signal applied to the grid varies above and below this d-c bias voltage.

(3) In Class A operation, the latter condition is desirable. The biasing potential is adjusted to the center of the Class A range and the varying potential is kept within the limits of this range. The center of the grid swing is fixed, and the amplitude variation of the grid voltage directly affects the amplitude of the plate-voltage swing. This is exactly the condition desired in Class A operation (fig. 184①).

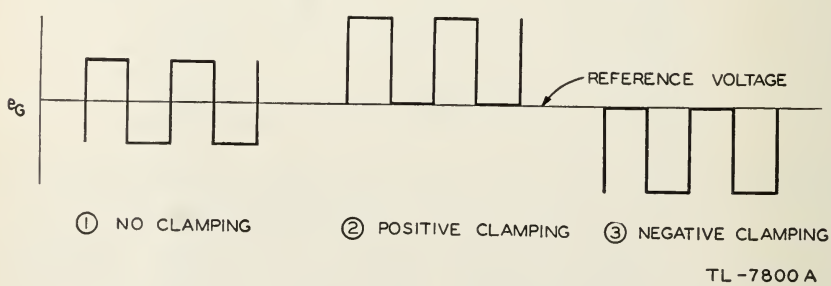

Figure 184. Grid-voltage variation with respect to definite reference potential.

(4) In other circuits, however, the waveform swing must be entirely above or entirely below the reference voltage, instead of alternating on both sides of it (fig. 184② and ③). For these applications a clamping

circuit is used to hold either the positive extreme or the negative extreme of the waveform to the desired level.

(5) The output of an ordinary R-C coupling network is alternating in character about the average voltage level of the applied waveform. After the coupling capacitor charges to the average applied voltage, any decrease in applied voltage causes the output voltage of the R-C network to swing negative. Any increase above the average causes the output voltage to swing positive. Now if the capacitor can be made to charge, say to the *minimum* applied voltage and no more, any swing has to be in the positive direction, and the output voltage varies between zero and some positive value, depending on the amplitude of the input signal. If, on the other hand, the capacitor can be made to charge to the *maximum* applied voltage and remain charged to that level, any swing necessarily is in the negative direction, and the output voltage varies between zero and some negative value, depending on the amplitude of the input signal. In the first case the bottom of the output waveform is clamped to zero (fig. 184②), and in the second case the top of the output waveform is clamped to zero (fig. 184③).

b. Diode clamping. (1) The simplest type of clamping circuit utilizes a diode in conjunction with the ordinary R-C coupling circuit. Consider the case in which the capacitor voltage is maintained at the minimum applied voltage (fig. 185). In order to understand the action of this circuit, the following significant point should be kept in mind: If the cathode

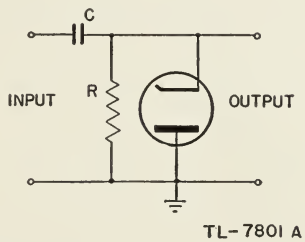

Figure 185. Positive clamping circuit.

of a diode is made negative with respect to the plate, or the plate positive with respect to the cathode, electrons flow from cathode to plate and the tube constitutes a low resistance. On the other hand, if the cathode is made positive with respect to the plate or the plate negative with respect to the cathode, no current flows and the tube may be considered an open circuit.

(2) The plate-voltage variation of a circuit producing a square-wave output (fig. 186) is typical of the kind of input applied to the clamping circuit of figure 185. In this clamping circuit, capacitor C charges gradually through the high resistance *R*. After a period of time, depending on the R-C time constant, the charge on the capacitor reaches 50 volts, the base of the input waveform. The problem is to maintain the charge at

this value in spite of the tendency of the capacitor to charge to a higher level when the applied voltage goes to + 150 volts.

(3) Assuming that a steady voltage equal in magnitude to that at point A in figure 186 has been applied for some time, the capacitor in figure 185 may be considered as being charged to 50 volts. During the time between *A* and *B* the charge on the capacitor is equal to the applied voltage and no current flows. Then at point *B* the applied potential suddenly increases to +150 volts. Since it is impossible for the charge on the capacitor to change instantaneously, the difference between the +150 volts applied and the 50 volts across the capacitor must appear across *R*. This difference of 100 volts becomes the output voltage.

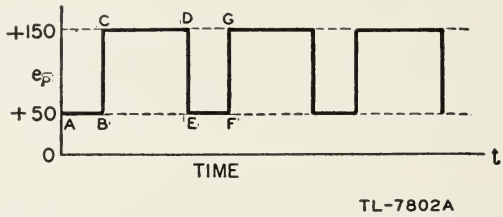

Figure 186. Typical plate voltage applied to clamping circuit.

(4) The fact that a voltage appears across *R* (fig. 185) indicates that a current is flowing through it. This current flow adds to the charge on *C*. Ordinarily the R-C time constant would be very long and the actual charge added to *C* would be extremely small. For simplicity, assume that the 150-volt potential is applied for a time equal to $\frac{1}{10}$ R-C or from point *C* to point *D*. Since the cathode of the diode is positive with respect to the anode, the tube is in effect an open circuit and *R* is a high resistance. During a time equal to $\frac{1}{10}$ R-C the charge on the capacitor increases exponentially by 10 percent of 100 volts, or 10 volts, making the total charge 60 volts. During the same time the drop across the resistor decreases exponentially by 10 volts to a value of 90 volts, leaving the sum of e_R and e_C still equal to the applied potential of 150 volts.

(5) Now at point D, the applied voltage suddenly drops back to 50 volts. But the capacitor is charged to 60 volts. This would leave an output voltage across *R* of 10 volts negative with respect to ground—a condition it is hoped to avoid. In order for the output to return to zero very quickly, the capacitor must discharge the extra 10 volts through a very short R-C path.

(6) In figure 185 the cathode of the diode is connected to the high side of *R* and the plate is grounded. Any output voltage which is negative with respect to ground makes the cathode negative with respect to the plate. In this state the diode conducts and becomes, in effect, a very low-resistance discharge path for the capacitor until the charge is again equal to the applied voltage and the output voltage returns to zero. These conditions are illustrated in figure 187.

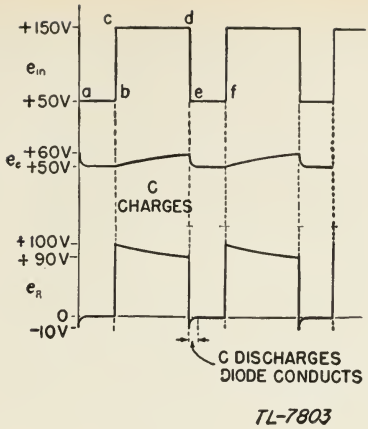

Figure 187. e_o and e_R waveforms of diode-clamping circuit with grounded plate for input signal e_{IN}.

(7) To illustrate the operation of the positive-clamping circuit further, it is assumed that the waveform shown in figure 188 is applied to the clamping circuit of figure 185. Since at point *A* the input voltage is zero, the output voltage is zero and remains so until point *B* is reached. At this time the input voltage drops suddenly to —100 volts at point C.

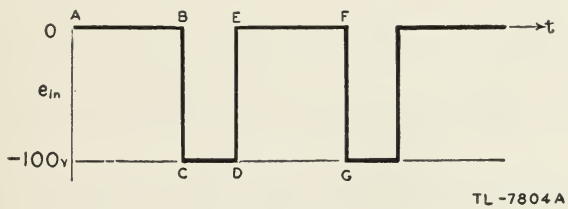

Figure 188. Typical voltage applied to diode-clamping circuit.

Since the capacitor cannot change its charge instantaneously, the output voltage across R also drops suddenly to —100 volts. Since the cathode of the diode is 100 volts negative with respect to the plate, the tube conducts heavily, charging the capacitor very rapidly through a short R-C until the capacitor voltage becomes equal to the applied voltage. At this time the output voltage has returned to zero and the diode becomes nonconducting. As long as the input remains at —100 volts, from points *C* and *D,* the output voltage remains at zero potential.

(8) At point *D,* the input voltage changes back to zero, a rise of 100 volts in the positive direction (—100 to 0). This rise produces a rise of 100 volts (0 to +100) across *R,* as the capacitor again cannot change its charge instantaneously. The capacitor must now discharge very slowly as the diode is nonconducting and the high-resistance path through R must be utilized.

(9) Assuming again a time for discharge from points E to F or one-tenth R-C, the voltage across the capacitor at F, and thus the output voltage, decreases to 90 volts, since the input is zero. At point F the input signal again drops to -100 volts. Instantaneously the output across R goes to -10 volts (input minus e_C). The diode conducts quickly, returning the charge on the capacitor to 100 volts and the output to zero. These results are shown in figure 189. Note that no portion of the waveform is lost after the first cycle. The function of the clamping circuit is merely to shift the reference voltage from the top of the waveform to the bottom.

(10) Figure 190 illustrates a diode-clamping circuit capable of causing the output waveform to vary between some negative value and the zero reference voltage. The only difference between this circuit and the one shown in figure 185 is in the manner in which the diode is connected.

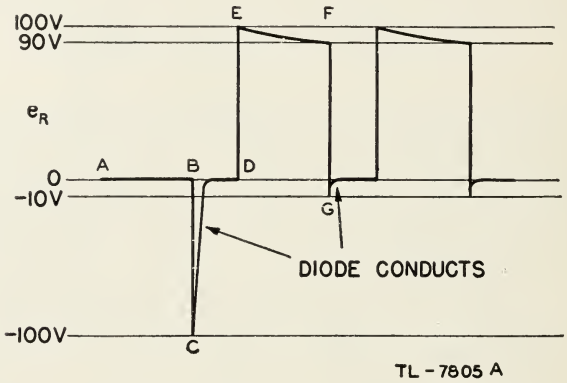

Figure 189. Output waveform of diode-clamping circuit with grounded plate, and input signal as shown in figure 188.

In this case the plate is connected to the output terminal while the cathode is grounded. Therefore in this condition the tube conducts whenever the plate rises above ground.

(11) The input signal (fig. 186) is now applied to this negative clamping circuit. When the input is at point A the plate of the diode becomes positive and the capacitor quickly charges up to $+50$ volts through the short R-C path. When this occurs the output voltage drops to zero. Then at point B the input voltage suddenly rises 100 volts (from $+50$ volts to $+150$ volts). Since the capacitor charge cannot change

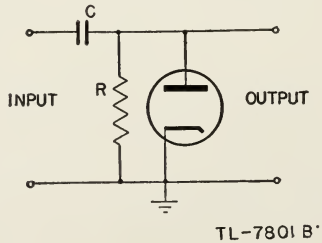

Figure 190. Negative clamping circuit.

instantaneously, the 100-volt change appears across R, sending the plate of the diode to $+100$ volts with respect to the cathode. The capacitor

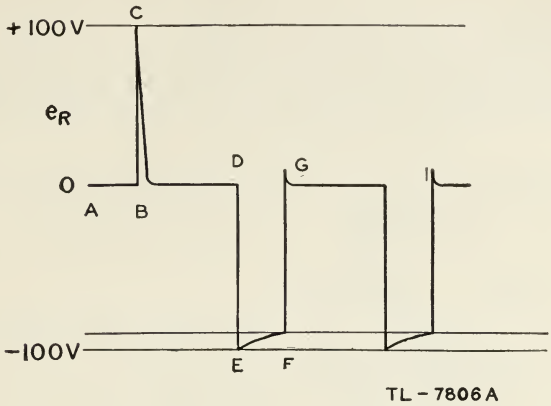

Figure 191. Output waveform of diode-clamping circuit with grounded cathode, and input signal as shown in figre 186.

again is presented with a short R-C charging path and charges very rapidly, bringing the output voltage back to zero quickly. At point D the input signal suddenly drops 100 volts, but capacitor C is charged to 150 volts and cannot change instantaneously. The 100-volt drop therefore appears across R, sending the output from zero to -100 volts. The input voltage drops from $+150$ volts to $+50$ volts and the output drops from 0 volts to -100 volts. During the time from E to F the capacitor can be expected to discharge a small amount through the high resistance path of R. At point G this slight loss of charge is replaced quickly as the plate of the diode goes positive momentarily. The output signal is shown in figure 191.

(12) In the practical circuit the size of the resistance R is great enough to make negligible the amount of distortion of the output caused by the slight charging of the capacitor.

c. Grid clamping. The function of clamping may be performed at the grid of an ordinary triode or pentode as well as in a diode. Any element of a vacuum tube if made positive with respect to the cathode, attracts electrons from it. On the other hand, any element made negative with respect to the cathode repels electrons and has no current flow. Thus the

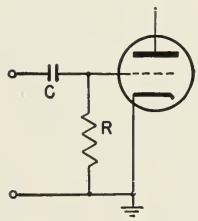

TL-7807

Figure 192. Grid-clamping circuit.

grid of a tube, connected as shown in figure 192, acts as the plate of a diode and produces the same clamping action as the circuit of figure 190. Any tendency for the grid to go positive causes grid current to flow, charging capacitor C to the applied potential.

d. Clamping above or below ground potential. Although circuits previously discussed clamped one extreme of the input signal to zero potential, actual circuits need not be limited to this one reference potential. Figure

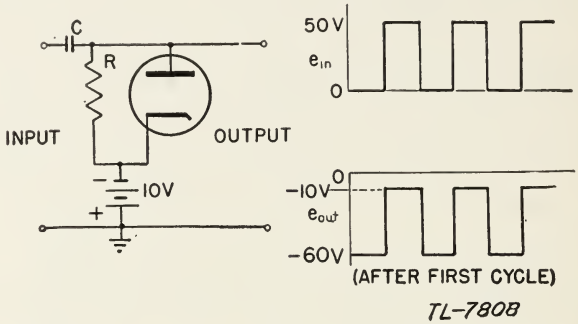

Figure 193. Clamping circuit which establishes reference potential of —10 volts.

193 illustrates the means of clamping the upper extreme of an input signal to —10 volts with respect to ground. The same principle may be applied to clamp either voltage extreme to any reference potential.

e. Synchronized clamping. (1) A more versatile clamping circuit is shown in figure 194. This arrangement keeps the bias on V_3 constant except for the time during which the clamping tubes V_1 and V_2 are held beyond cut-off by a synchronizing pulse. During the period of conduction of V_1 and V_2, these tubes may be considered as part of a voltage-divider network for the purpose of placing a definite voltage on the grid of V_3. Actually the circuit is slightly more complicated than the simple voltage-divider explanation would imply.

(2) In figure 194, while V_2 is operating at zero (grid-to-cathode) bias and may be considered therefore as a simple resistor, V_1 is biased by the drop across V_2. The reason is that the cathode of V_1 is connected directly to the plate of V_2 and the grid of V_1 is tied directly to the grid of V_2, which in turn is connected effectively to the cathode of V_2, so long as no synchronizing potential is applied.

(3) Assume that for some reason the potential at the grid of V_3 tries to rise. Except the negligible fixed bias, which does not change, the voltage at the grid of V_3 and the voltage across V_2 are identical. Thus a rise in the grid voltage of V_3 results in an increase in the bias on V_1, which makes it a higher resistance than before, bringing the voltage at the plate of V_2 back to normal. In like manner a decrease in the voltage at the grid of V_3 means a decrease in the bias of V_1, which decreases the resistance of V_1, bringing the voltage at the grid of V_3 back to normal. So long as V_1 and V_2 conduct, the voltage at the grid of V_3 and thus the plate current of V_3 are held constant by the voltage-divider action of V_1 and V_2. V_1 is the variable resistance which controls the fraction of the B+ voltage that appears across V_2.

(4) The synchronizing pulse is applied as a negative rectangular wave which drives V_1 and V_2 beyond cut-off for the desired length of time. With tubes V_1 and V_2 cut-off, the grid of V_3 is left free to follow any changes in input-voltage amplitude. Capacitor C_1 has no path through which to discharge except by way of the very high resistance of the insulating material used for tube bases, sockets, etc. Thus the voltage at the grid of V_3 follows exactly the input voltage. At the end of the synchronizing pulse V_1 and V_2 again conduct, returning the voltage at the grid of V_3 quickly back to the reference potential.

f. Application of clamping circuits. (1) In practice, clamping usually is encountered in sweep circuits. If the sweep voltages do not always

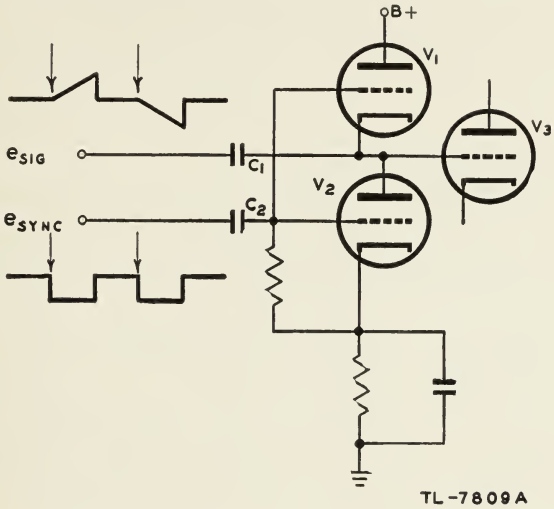

Figure 194. Synchronized clamping circuit.

start from the same reference point, the trace itself does not begin at the same point on the screen each time the cycle is repeated, and is therefore jittery or erratic. If a clamping circuit is placed between the final sweep amplifier and the deflection element, the voltage from which the sweep signal starts can be regulated by adjusting the d-c voltage

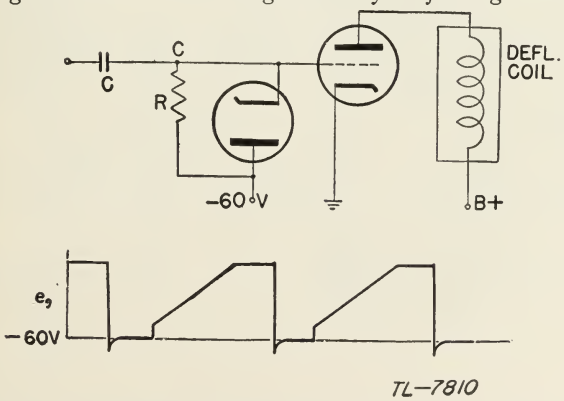

Figure 195. Clamping diode employed in electromagnetic sweep system.

applied to the clamping circuit. An arrangement such as that shown in figure 193 insures, in the case of a negative-going sweep voltage, that the waveform applied to the deflection plate varies in a negative direction from the d-c voltage level applied to the cathode of the diode.

(2) A circuit using a magnetic cathode-ray tube offers another example of sweep-clamping by the use of a diode in the grid circuit of the final sweep amplifier (fig. 195). Such an arrangement assures that the negative extreme of the sweep waveform is clamped at the d-c level of —60 volts. Therefore the static current, which is flowing in the final sweep-amplifier tube and in the deflection coil at the beginning of the sweep, always has the same value since the biasing voltage on the grid at this time always has the same value. Therefore, the beam always starts its trace from the same spot on the screen, because the static current in the coil at the beginning of the trace determines this position.

(3) Clamping circuits make it possible to apply two signals, one above the trace and the other below. Without the clamping action both signals would merely vary about the sweep line and prevent an examination of their relative amplitudes.

46. PEAKING CIRCUITS. a. General. (1) In the development of trigger pulses for use in controlling the operation of various types of circuits, peaking circuits are often employed. As a rule it is necessary to have a trigger pulse of very short duration and with an extremely sharp leading edge. In order to produce such pulses it is necessary to use a circuit capable of distorting an input signal in such a way as to produce an output waveform in which the time duration is shortened and the leading edge is as nearly vertical as possible.

(2) The choice of peaking circuit used depends primarily upon the kind of input signal available. If the input signal is a rectangular wave an R-C differentiator circuit is employed to produce the peaked output. An alternate method employs a transformer to produce the peaked

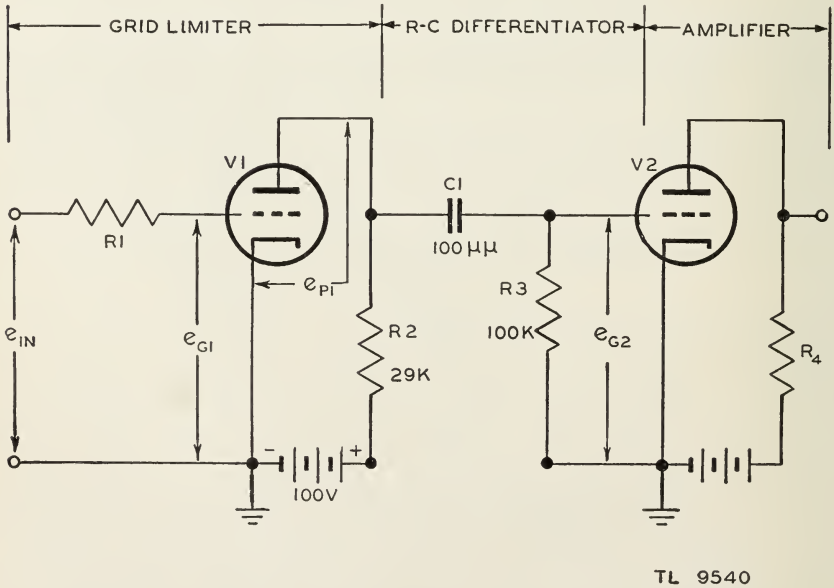

Figure 196. Typical application of R-C differentiator as a peaker.

output. If the available signal is a sine wave a "saturable inductor" can be used to produce the trigger pulses.

b. R-C differentiator. (1) A differentiator circuit produces an output voltage the amplitude of which is proportional to the rate of change of the input voltage. In an R-C differentiator circuit, the time constant is made short relative to the duration of the applied pulse in order that the capacitor will become fully charged in a small fraction of the pulse duration. The charge on a capacitor cannot change in value instantaneously but can change only at the rate established by the R-C product. This is equivalent to the statement that any sudden change in the voltage of one terminal of a capacitor must occur simultaneously with an equal change in the voltage of the other terminal. Since the two circuit components act as a voltage-divider network, the portion of the applied voltage which does not appear across the capacitor, because of the time required for a change of charge, must appear across the resistor as an output voltage.

(2) The circuit of figure 196 illustrates a practical application of an R-C differentiator as a peaker circuit. The input voltage e_{IN} has a half period of 100 microseconds which drives the grid of V_1 behind cut-off during the negative half-cycle, and maintains it at approximately ground potential because of grid limiting, during the positive half-cycle. The grid voltage e_{GI} and the resultant plate voltage e_{P1} are shown in

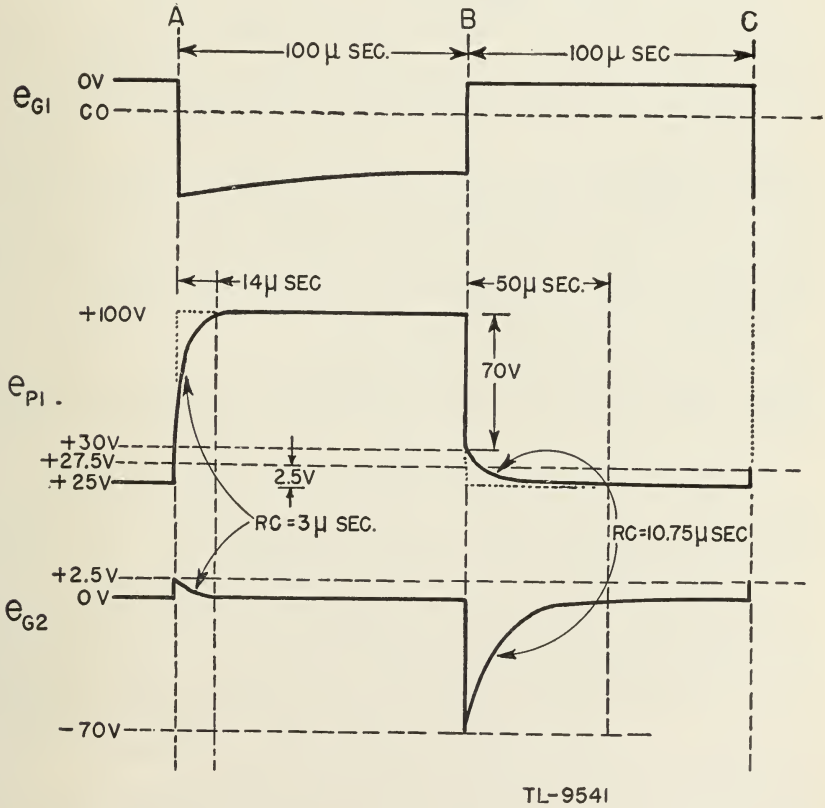

Figure 197. Peaker circuit waveforms.

figure 197. The dotted waveform indicates the shape of e_{P1} with the R-C differentiator disconnected. The maximum value of e_{P1} is 100 volts and the minimum value, as determined by the tube characteristics, is 25 volts. The plate circuit of V_1 is effectively an open switch during the half-cycle that the tube is cut-off. When conducting, the plate circuit resistance is effectively the static plate resistance of the tube, approximately 10,000 ohms.

(3) During the interval preceding time $_AV_1$ is conducting, and capacitor C_1 reaches a charge of 25 volts. Since the value of e_{P1} is steady at this level during the conducting time, the grid voltage e_{G2} becomes zero. These voltage relations are also true around the circuit at the instant V_1 is cut-off (time A, fig. 197) since the capacitor cannot change its charge instantaneously. The equivalent circuit for the time interval during which V_1 is cut off is shown in figure 198.

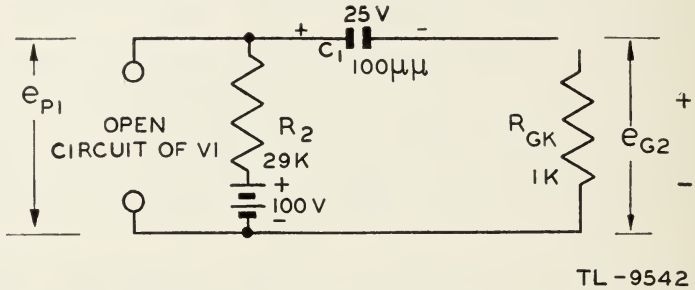

Figure 198. Equivalent circuit of figure 196 during time V_1 is cut off.

(4) During this time, C_1 charges from the initial voltage of 25 volts to the final voltage of 100 volts. As V_2 is normally at zero bias, any positive voltage in the grid causes grid current to flow, placing a grid-to-cathode resistance of 1,000 ohms in parallel with the 100 K resistor R_3. Thus essentially all of the charging current flows through R_{GK} and R_3 can be neglected. The charging time constant then becomes—

Time constant (charge) $= R_{\text{total}} \times C = (29 + 1)\ 10^3 \times 100 \times 10^{-12} = 3\mu$ sec.

The initial charging current which flows through the circuit is the net voltage acting around the circuit divided by the total resistance of the circuit:

$$i \text{ (initial)} = \frac{E}{R} = \frac{100 - 25}{(29 + 1)\ 10^3} = \frac{75}{30 \times 10^3} = 2.5 \text{ ma.}$$

This current flows through the grid-to-cathode resistance of V_2 and causes an initial voltage drop from grid to cathode of

$$e_{G2} \text{ (initial)} = i\ R_{GK} = 2.5 \times 1 \times 10^3 = 2.5 \text{ volts}$$

(5) Since the voltage across the capacitor C_1 at this instant is 25 volts, the initial value of the voltage e_{P1} is 25 + 2.5 or 27.5 volts. The capacitor charges exponentially to 100 volts in a time determined by the 3-microsend time constant, and the voltage e_{G2} drops exponentially from +2.5 volts to zero in the same time. The equal instantaneous jumps and ensuing exponential changes in the values of e_{P1} and e_{G2} are shown in figure 197 between points A and B.

(6) At the end of the cut-off period of V_1 the potential across the capacitor C_1 is 100 volts. Thus at the instant V_1 starts to conduct (time

B, fig. 197) the voltage drop across C_1 remains at 100 volts and the full instantaneous change in voltage of e_{P1} appears across R_3, as e_{G2}. The equivalent circuit for the time interval during which V_1 is conducting is shown in figure 199.

(7) During this time interval, C_1 discharges from the initial value of 100 volts to the final voltage of 25 volts. As the grid of V_2 is normally at zero potential any sudden decrease in the potential of e_{P1} in-

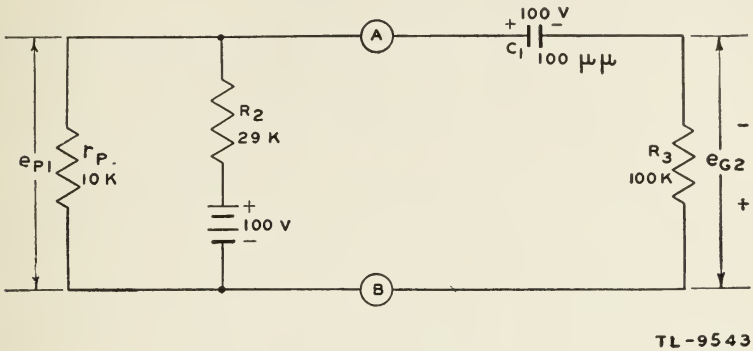

Figure 199. Equivalent circuit of figure 1 during time V_1 is conducting.

stantly lowers *both* plates of the capacitor a corresponding amount and produces a negative voltage at the grid. No grid current flows during this half-cycle; therefore R_{GK} is an open circuit and the discharge current must flow through R_3 to ground. The discharging time constant becomes—

$$\text{Time constant (discharge)} = R_{\text{total}} \times C = \left(\frac{10 \times 29}{10 + 29}\right) + 100$$

$$10^3 \times 100 \times 10^{-12} = 10.75\ \mu \text{ sec.}$$

The initial discharging current is—

$$i \text{ (initial)} = \frac{E}{R} = -\frac{75}{\left(100 + \frac{10 \times 29}{10 + 29}\right)10^3} = -0.7 \text{ ma.}$$

This current flows in the opposite direction to the charging current; hence the minus sign is used. The current flows through the grid resistor R_3 and causes an initial voltage drop at the grid of V_2 of

$$e_{G2} \text{ initial} = i\,R_3 = -0.7 \times 10^{-3} \times 100 \times 10^3 = -70 \text{ volts}$$

(8) Since the voltage across C_1 at this instance is 100 volts, the initial value of the voltage e_{P1} is 100 — 70 or 30 volts, a *drop* of 70 volts. The plate cannot drop 75 volts instantaneously because the capacitor discharges exponentially to 25 volts in a time determined by the 10.75-microsecond time constant, and the grid voltage e_{G2} rises exponentially from —70 volts to zero in the same time. These relationships are shown in figure 197 between points B and C. Again it is seen that the instantaneous change of e_{G2} is equal to that of e_{P1}.

(9) The shape of the plate voltage waveform e_{P1}, as can be seen in figure 197, is modified somewhat by the peaking circuit in which it is being fed. The theoretical shape of the voltage at the plate of V_1 with the R-C circuit disconnected is rectangular. The rounding of the cor-

ners in the actual case is due to the loading effect of the peaking circuit. The flow of grid current through V_2 during the charging period of the capacitor (V_1 cut-off) places the low grid-to-cathode resistance of V_2 in parallel with R_3, producing a very short charging time constant. Thus a higher current flows and the loading effect is greater than in the case of the longer discharge time constant. The tube V_1 can be regarded as a square-wave generator with internal resistance. Its terminal voltage is altered as the load varies.

(10) Whenever a rectangular wave is to be peaked, an R-C differentiator which has a time constant very short compared to the duration of the pulse may be used. The loading effect of the differentiator may be reduced somewhat in applications where a low output impedance is required by replacing the circuit of V_2 with a cathode follower. The grid of the cathode follower may be driven highly positive with respect to ground, without drawing grid current. Thus the loading of the pulse generator is reduced and held essentially uniform throughout the complete cycle of operation. In cases where peaking is not desired, R-C coupling circuits with time constants very long compared to the duration of the input pulse are used. In this case the capacitor becomes charged to an average value which does not change appreciably from one part of the operating cycle to the other. Thus the loading effect is negligible and the waveform is passed without distortion.

c. Saturable inductor. (1) A special coil in which a low value of current produces magnetic saturation of the core is termed a saturable inductor. This type of inductor, which is sometimes called a nonlinear

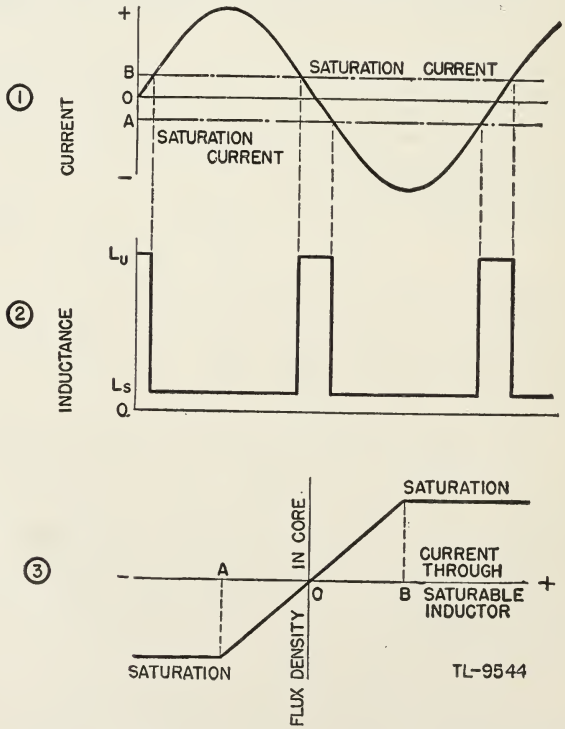

Figure 200. Relationship between current and inductance in saturable inductor.

coil, can be used to produce sharp pulses directly from a pure sine wave.

(2) An inductor offers an impedance to the flow of alternating current because the current produces a changing flux which induces in the coil a voltage of such polarity that it resists the flow of current by opposing the applied voltage. The larger the inductance, the larger is the back emf induced in the coil, so that a large inductance offers a high impedance to the flow of alternating current. In an iron-core inductor the impedance at any frequency is proportional to the inductance as long as the core is not magnetically saturated. However, when the core is saturated, the flux linking the coil can no longer be increased by an

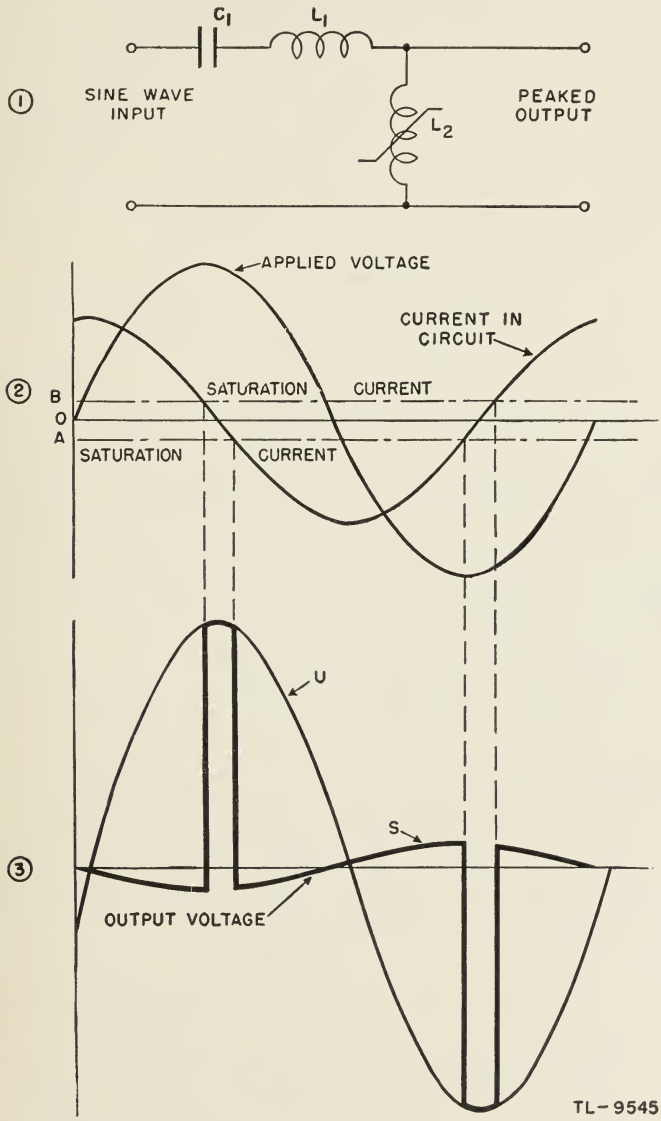

Figure 201. Peaking by means of saturable inductor.

increase of the current through the coil so that the induced back voltage drops to a low value. Thus, the impedance of a saturated inductor is nearly zero, so that the effective inductance in the saturated condition must also be nearly zero.

(3) A coil which is wound on a ring of magnetic metal can be designed so that a relatively small current through the coil produces saturation of the core. If a large-amplitude sine-wave current (fig. 200①) is forced through such a saturable inductor the inductance of the coil will change abruptly as the current exceeds the saturation value. While the current magnitude is between limits A and B, the core is unsaturated so that the effective inductance is high, as L_U in figure 200②. However, when the current through the coil exceeds B in the positive direction or A in the negative direction, the core is quickly saturated and the effective inductance drops to a very low value, as L_S. The magnetization curve (fig. 200③) shows an idealized graph of the flux density in the core of the saturable inductor plotted against the current through the coil. It is apparent that the flux density in the core is proportional to the current in the coil while the current is between limits A and B, so that the inductance is equal to L_U. While the current is more positive than B or more negative than A the core is saturated, and the inductance is equal to the very low value, L_S.

(4) A circuit in which a saturable inductor is used to produce pulses from a sine wave is shown in figure 201①. The series circuit of C_1, L_1, and L_2 is made nearly resonant. The size of inductor L_1 is chosen so that the circuit is slightly inductive when L_2 is unsaturated, and slightly capacitive when L_2 is saturated. Thus while L_2 is saturated the current in the circuit *leads* the applied voltage by nearly 90° (fig. 201②). Since the voltage across L_2 leads the current through it by nearly 90°, the voltage across L_2 is nearly 180° out of phase with the applied voltage, and because the saturated inductance, L_S fig. 200②) of L_2 is almost zero, the voltage across this inductor is of very small amplitude, as shown by curve S (fig. 201③). If L_2 were replaced by an ordinary coil whose inductance equals the unsaturated inductance, of L_2 (L_U, fig. 200②), the circuit would become inductive and the current would lag the applied voltage by nearly 90°. In this case the voltage across L_2 is in phase with the applied voltage, but because the circuit is near series resonance and because the reactance of L_2 is now large, a large-amplitude sine wave such as curve U (fig. 201③), will appear across L_2. Since L_2 is saturated during most of the cycle, the voltage across this inductor is essentially the small-amplitude sine wave, S. However, while the current passes from saturation value A through zero to saturation value B in the opposite direction, the core is unsaturated. During this short interval, the voltage across L_2 changes abruptly from curve S to curve U, producing a large pulse. When the coil again becomes saturated the voltage across L_2 drops back to curve S. The duration of the pulse so produced is made short by the use of a series-resonant circuit which causes a large current to flow through L_2 so that only a very short time is required for the current to pass from the saturation value in one direction to the saturation value in the other.

47. SAWTOOTH GENERATORS. a. General. Voltages having sawtooth waveforms have wide application in radar. The simplest method of obtaining this type of waveshape is by means of a gas-tube relaxation oscillator. This oscillator is one in which no timed circuits are employed

and the output shows abrupt changes in voltage usually brought about by charging or discharging a capacitor through a resistance.

b. Neon tube sawtooth generator. (1) The tube illustrated in figure 202 is a neon glow tube such as is described in section IV. Until the potential across this type of tube reaches a value high enough to ionize the gas, the tube presents an almost infinite impedance. However, once ionized, a very small voltage is sufficient to keep the current flowing and until the voltage across the tube falls below the value required to maintain the ionization the tube has a low impedance. When the voltage falls below this value, the gas *de-ionizes* and current flow ceases. The potential at which the gas ionizes and conduction begins is called the *firing potential* of the tube and that at which deionization takes place is known as *de-ionizing potential.* The tube can be considered as a switch which is open when the tube is not ionized and closed when it is ionized.

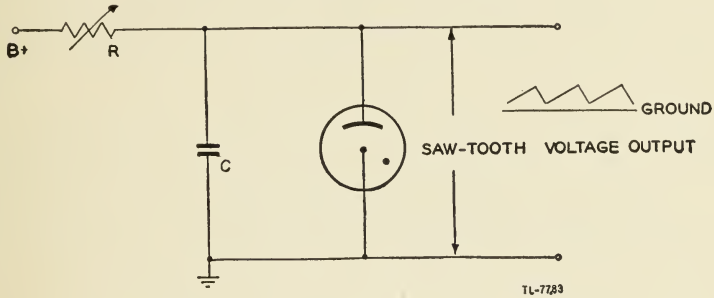

Figure 202. Circuit of neon sawtooth generator.

(2) The simplest form of sawtooth generator consists of a capacitor, a variable resistor, a source of power, and a gas-tube switch. Since the voltage across this capacitor may be controlled by the neon switch, the circuit is called a neon sawtooth generator (fig. 202). When constant voltage is applied to the input of this circuit, the capacitor is charged through the resistor. The voltage across the capacitor rises from zero,

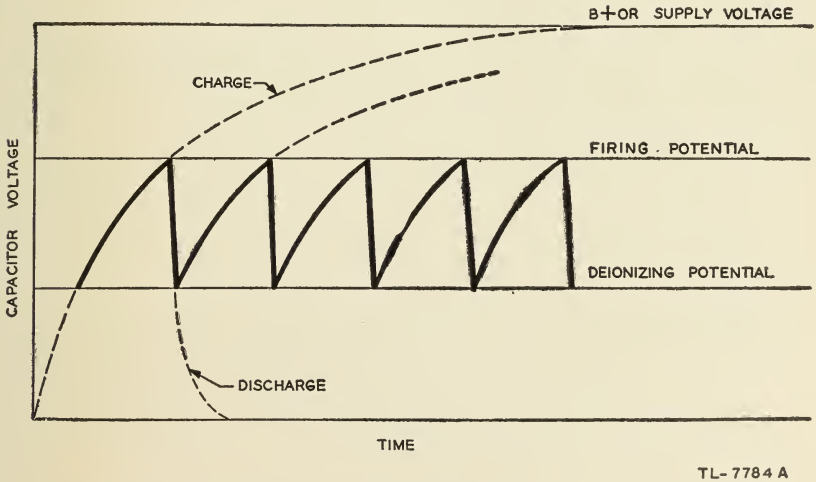

Figure 203. Variation of capacitor voltage in neon sawtooth generator.

approaching the full supply voltage along a normal R-C charging curve (fig. 203). The voltage across the neon tube is the same as the voltage across the capacitor, because these elements are in parallel. The neon tube acts as an open switch until the voltage across it reaches the firing point.

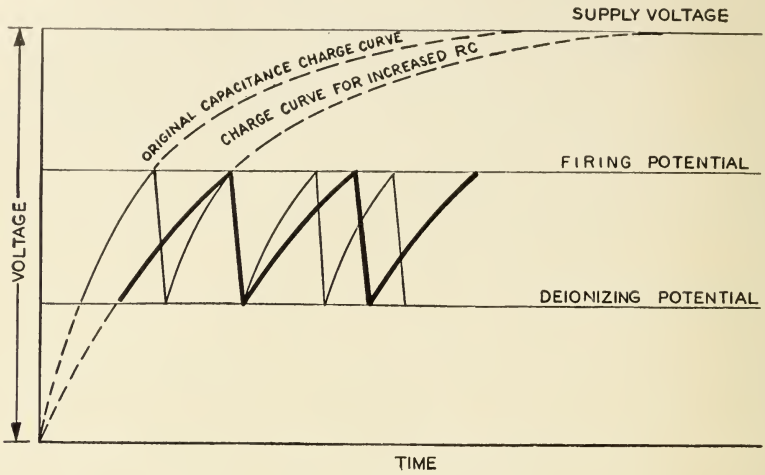

(1) CAPACITANCE OR RESISTANCE INCREASED, FREQUENCY DECREASED.

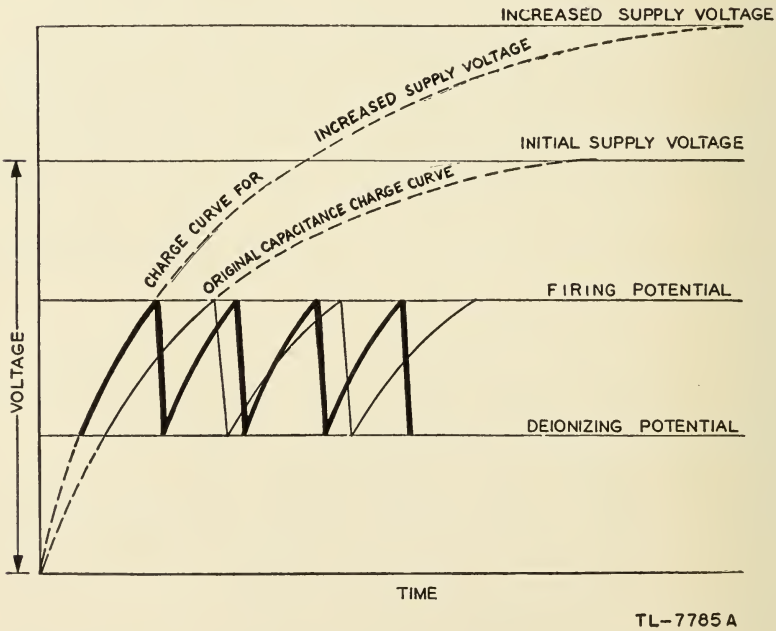

(2) SUPPLY VOLTAGE INCREASED, FREQUENCY INCREASED.

Figure 204. Frequency changes resulting from changes in circuit constants of neon sawtooth generator.

At the firing potential, the neon tube ionizes and forms a discharge path for the capacitor. The capacitor thus discharges very rapidly until the voltage falls to the deionizing potential of the neon tube, when conduction stops and the tube becomes an open switch again. The capacitor then begins to charge again toward the supply voltage. The voltage rises along the R-C curve to the firing potential of the neon tube, and then falls again. This process continues as long as a d-c supply is maintained.

(3) The frequency of a sawtooth wave is the number of times the voltage rises and falls per second. This frequency can be varied by changing the firing and deionizing potentials, but this means of variation requires a change in neon-tube characteristics. A simpler method of frequency control is to vary the value of the resistor, the value of the capacitor, or the magnitude of the supply voltage. Since the resistor and capacitor form a time-constant circuit, an increase in the value of either element increases the time for a given amount of charge to be developed across the capacitor from a fixed source. Therefore, a lower frequency may be expected with increased capacitance or resistance values (fig. 204①).

Also, a decreased supply voltage will cause a lower frequency. The supply voltage generally is held constant. However, it if it made higher, the capacitor charges more quickly to the given value of the firing potential and thus results in an increase in frequency (fig. 204②).

c. Thyratron sawtooth generator. (1) This relaxation oscillator is similar in operation to the neon sawtooth generator. A thyratron tube, or gas

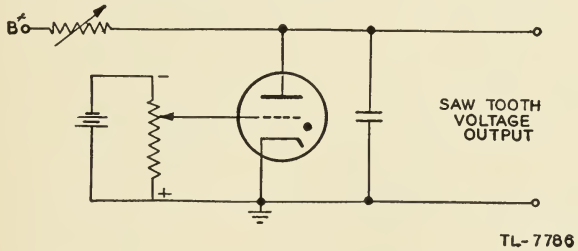

Figure 205. Simple thyratron sawtooth generator.

triode, is used as an electronic switch. The thyratron acts in the same manner as the neon tube, except that a grid has been added to control the firing potential. The more negative this grid is made in relation to the

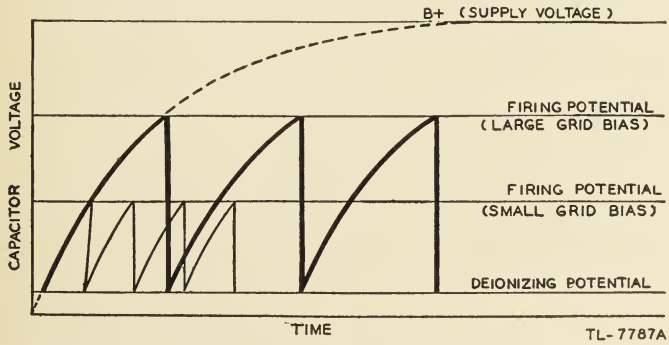

Figure 206. Change of amplitude and frequency of thyratron sawtooth generator by change of grid bias.

cathode, the higher is the firing potential of the thyratron. The deionizing potential is affected very little by the bias on the grid. As a switch this tube is more stable than the neon tube, because frequency changes and applied voltage do not alter its characteristics so readily.

(2) In the typical circuit for the thyratron sawtooth generator, shown in figure 205, the charging and discharging of the capacitor take place in

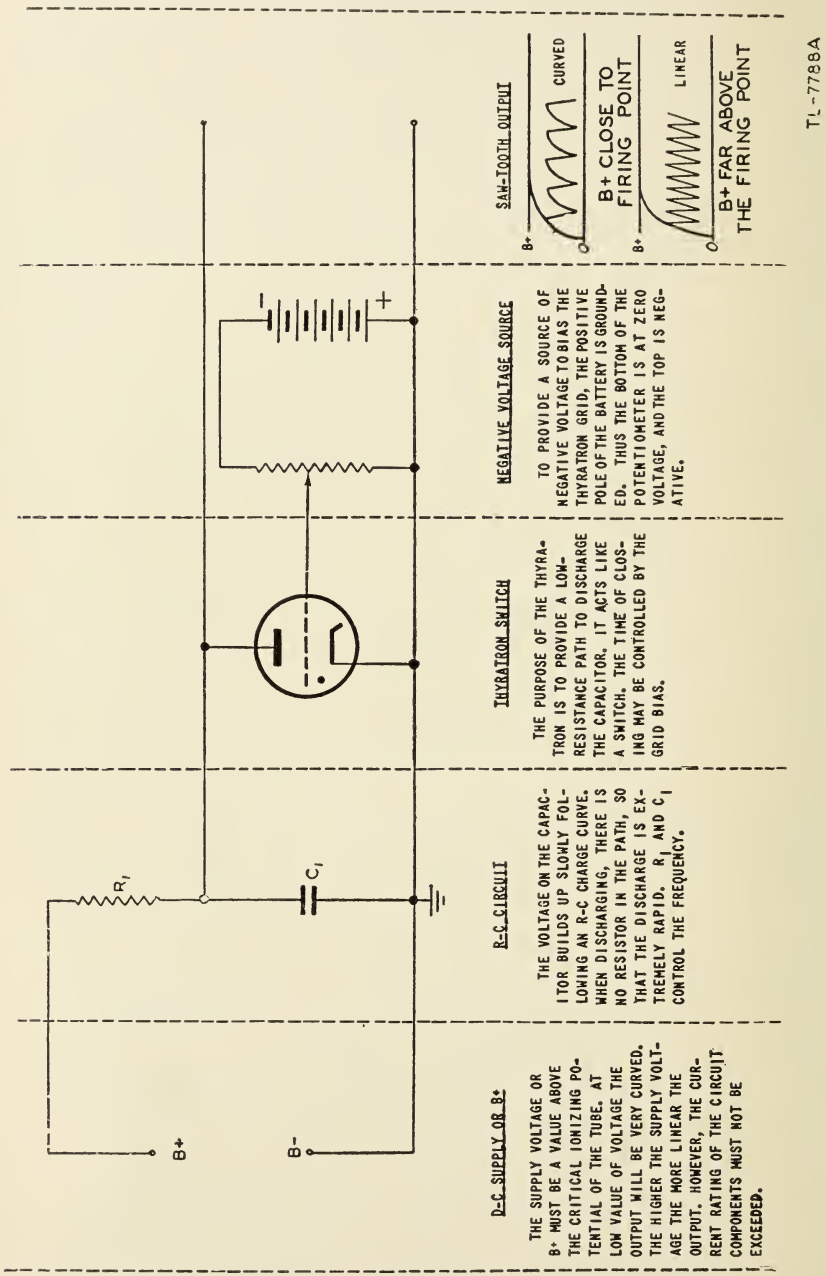

Figure 207. Thyratron relaxation oscillator.

exactly the same manner as shown in figure 204. The amplitude of the voltage rise on the capacitor is controlled by a negative bias on the grid of the thyratron tube. This bias is supplied by a fixed negative voltage source. Any voltage on this voltage divider must be negative since the positive end of the battery is connected to ground potential. The amplitude of the output sawtooth waveform is determined by the negative potential on the grid of the thyratron. This method of amplitude control has a limitation in that a change of frequency accompanies a change of amplitude (fig. 206).

(3) The frequency of a thyratron sawtooth generator may be varied in the same manner as in the neon sawtooth generator. An increase in the resistor or capacitor, or a decrease in the supply voltage causes a decrease in frequency. A less negative grid bias causes a frequency increase and

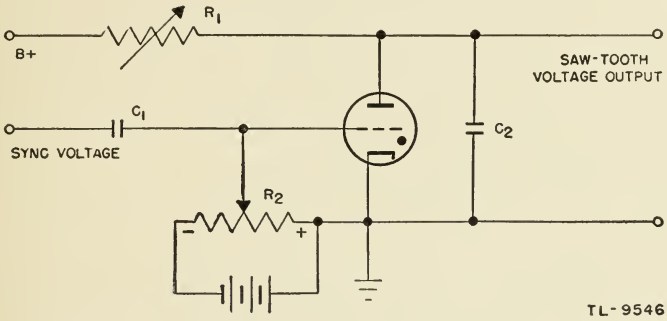

Figure 208. Synchronized thyratron-sawtooth generator.

an amplitude decrease. A summary of the generator action and frequency controls is shown in figure 207.

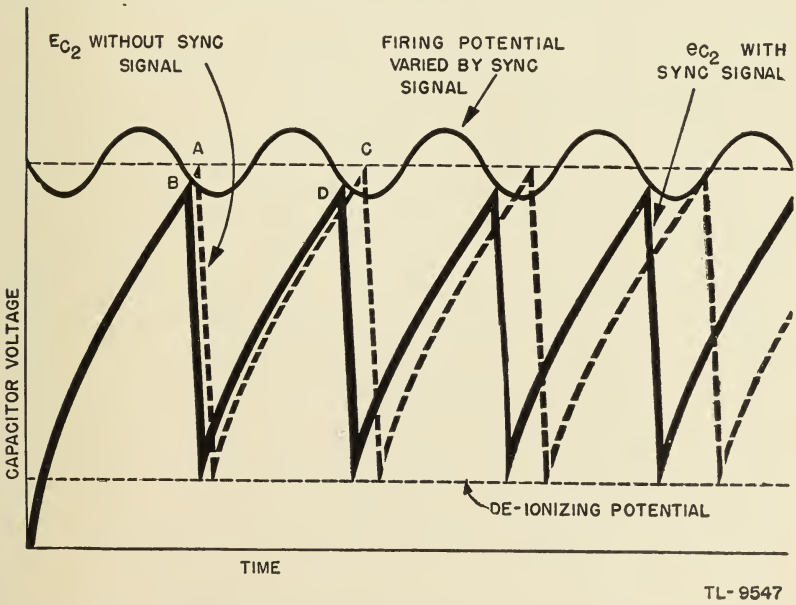

Figure 209. Synchronization of thyratron-sawtooth generator with sine wave.

(4) It can be seen from figure 206 that the rise in voltage of the sawtooth wave is not linear but follows the exponential charging curve of the capacitor. The lower portion of the curve is very nearly linear, however, and by using a d-c supply voltage that is much higher than the firing potential of the tube, a rise that is sufficiently linear for most purposes can be obtained at the output.

(5) The oscillations of a gas-tube relaxation oscillator are not stable in frequency. The thyratron oscillator, however, can be synchronized with a constant frequency by injecting a small voltage of the desired frequency on the grid. Such an arrangement is shown in figure 208. The voltage waveforms are illustrated in figure 209. The action is as follows: The natural frequency of the thyratron oscillator is adjusted to a slightly lower value than that of the synchronizing voltage. The natural action is shown by the dotted lines of figure 209. Thus without the synchronizing voltage the tube would fire at point *A*. When the synchronizing voltage is present on the grid however, the firing point varies in accordance with the grid signal. At some time during the synchronizing cycle the firing potential will be low, so that the tube fires at point *B*. On the next cycle the voltage across the capacitor reaches the firing point at *D*. The time of each oscillation is thus reduced from *AC* to *BD* and the oscillator is now locked to the frequency of the injected voltage. In a similar manner it may be locked to a submultiple or multiple of the synchronizing voltage.

48. MULTIVIBRATORS. a. General. (1) The multivibrator is a form of relaxation oscillator which is frequently used in radar circuits. There are several different types in use, depending on the function they are required to perform. Multivibrators may be designed as continuous or *free-running* or as *driven* oscillators whose operation and frequency is controlled by a synchronizing or triggering voltage applied from an outside

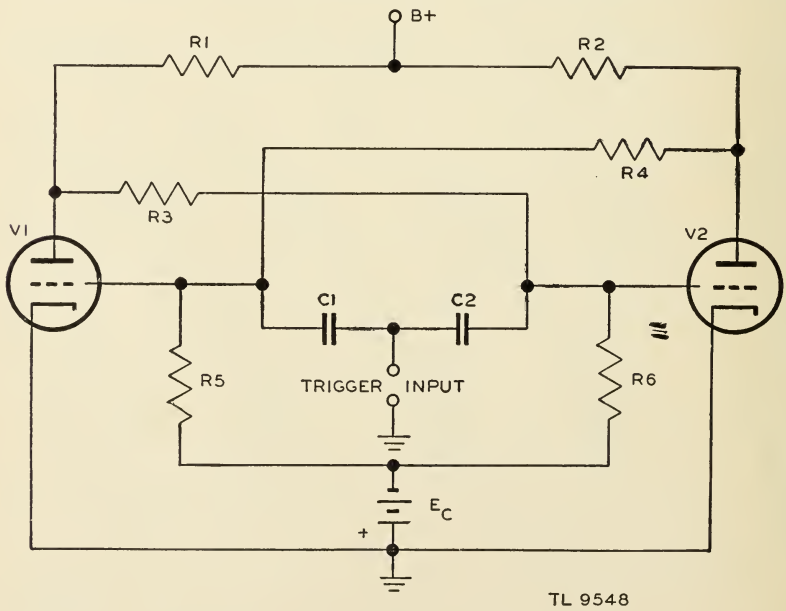

Figure 210. Eccles-Jordan trigger circuit.

source. The output of a multivibrator is usually nearly rectangular in form and the frequency may range from about 1 cycle per minute to 100 kilocycles per second.

(2) The following fundamental properties of vacuum-tube circuits are repeated as an aid in tracing the multivibrator action:

(*a*) A rise in grid voltage causes an increase in plate current through the tube; conversely a fall in grid voltage causes a decrease in current.

(*b*) An increase of current through the load resistor causes the voltage on the plate to decrease. A current decrease results in a higher plate voltage.

(*c*) The voltage across a capacitor cannot change instantaneously.

(*d*) The polarity of the voltage which appears across a resistor may be determined simply by remembering that electrons always flow from the negative end to the positive end.

(*e*) A capacitor requires a definite amount of time to charge or discharge through a resistor. A measure of this time, called the time constant, is found by multiplying the resistance by the capacitance (R times C).

b. Trigger circuits. (1) The multivibrator will be more easily understood if the action of the Eccles-Jordan trigger circuit is first studied. This circuit is shown in figure 210. This form of multivibrator employs direct coupling between the plates and grids of the two tubes. It is not an oscillator in the true sense; rather it is a circuit possessing two conditions of stable equilibrium. One condition is when V_1 is conducting and V_2 is cut off; the other when V_2 is conducting and V_1 is cut off. The circuit remains is one or the other of these two conditions with no change in plate, grid, or cathode potentials, or plate current, until some action occurs which causes the nonconducting tube to conduct. The tubes then reverse their functions and remain in the new condition as long as no plate current flows in the cut-off tube. Because of this sudden reversal or "flopping" from one state of equilibrium to the other, this type of circuit is often referred to as a *flip-flop* circuit.

(2) In order to analyze the operation of the circuit, assume that the plate voltage $B+$ is suddenly applied to the tubes. If both tubes and their corresponding circuit elements were exactly alike, equal currents would flow through the plate circuits. It is inconceivable, however, that two tubes and their circuit elements could be balanced so exactly as to permit this to occur. One tube will start to conduct an instant before the other or will conduct more heavily than the other. Assume that V_1 conducts more heavily than V_2.

(3) When conduction begins, tube V_1 is assumed to be passing a larger current than V_2 so that the voltage drop across its plate resistor R_1 is greater than that across the plate resistor R_2 of tube V_2. The voltage at the plate of V_1 is then lower than that at the plate of V_2 and this lower voltage is passed to the grid of V_2 through the coupling resistor R_3. The current through V_2 is still further decreased because of this negative-going change of the grid potential. The decrease in plate current causes an increase in voltage at the plate of V_2 which is passed to the grid of V_1 through coupling resistor R_4. As a result of this positive-going change in the grid voltage of V_1, still more current flows in its plate circuit and the voltage at the plate is still further decreased. This action is cumulative, so that when the magnitude of the voltage across V_1 is considerably

less than the battery voltage E_C, the voltage across R_6 is sufficiently negative to cut off V_2.

(4) In this condition, the circuit is in stable equilibrium, with V_2 cut-off and V_1 conducting heavily. The circuit will remain in this condition until the nonconducting tube V_2 is made to conduct by the application of a trigger voltage. A positive pulse may be injected through the capacitors to both grids. Since tube V_1 is already passing a heavy current, the positive pulse on its grid will have very little effect on the flow of current through the tube. Tube V_2, however, is cut off and the positive pulse on its grid, if of sufficient amplitude, removes the high negative bias momentarily. Current then flows in the plate circuit of V_2 and the voltage at its plate drops. This decrease is impressed on the grid of V_1. The current through plate resistor R_1 then decreases and the plate potential rises. This rise is passed to the grid of V_2, causing a still further increase in plate current. The action is now the reverse of that in the first case, and it continues until V_2 is conducting a heavy current and V_1 is cut off. The reversing or "flopping" from one state of equilibrium to the other occurs so rapidly as to be almost instantaneous. A positive trigger pulse, then, always reverses the tubes by causing the nonconducting tube to conduct.

(5) Negative trigger pulses may also be used to cause the circuit to switch In this case the negative trigger acts on the conducting tube, causing a sudden decrease in plate current and a corresponding rise in plate voltage. This rise is passed to the cut-off tube, resulting in a flow of current in its plate circuit which initiates the action previously described.

(6) From the foregoing discussion, it is evident that the Eccles-Jordan circuit executes one alternation for each trigger pulse, two pulses being necessary for a complete cycle. It is possible, however, to bring about a complete cycle of operation with a single trigger pulse by making certain circuit modifications.

c. One-shot multivibrators. (1) The circuit shown in figure 211 is a modification of the Eccles-Jordan which accomplishes a complete cycle when triggered with a positive pulse. It is essentially a two-stage resistance-capacitance-coupled amplifier with one tube cut off and the other

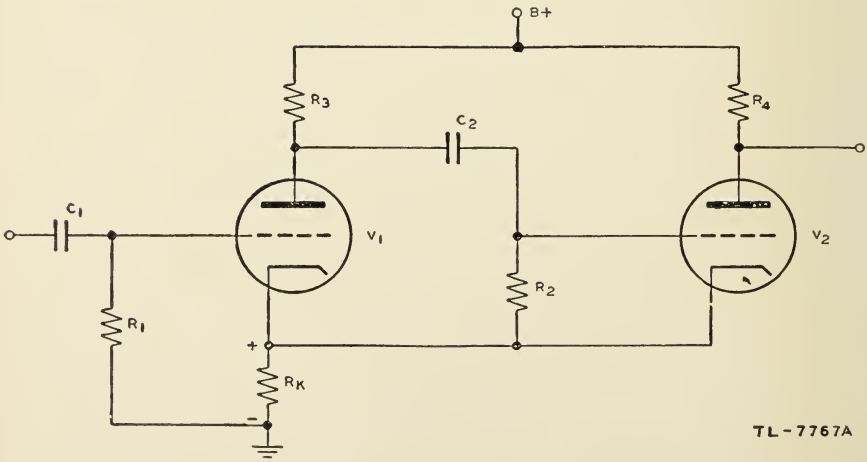

Figure 211. One-shot multivibrator.

normally conducting. The balanced condition of the circuit is established by the arrangement for biasing the tubes. The grid of V_2 is connected to its cathode through the resistor R_2. No current normally flows through this resistor; therefore the grid bias is normally zero. The plate current of V_2 flows through the cathode resistor R_K, and the resultant voltage drop across R_K biases V_1 to cut-off. When V_2 is not conducting, V_1 cannot be cut off by the self-bias developed across R_K.

(2) The action of the circuit is as follows:

(*a*) V_1 is cut off initially by the voltage drop produced across R_K by i_{P2}, the plate current of V_2 (fig. 212②, time *A*).

(*b*) V_2 is conducting heavily because its grid is at cathode potential (fig. 212④, time *A*).

(*c*) A positive pulse (fig. 212①, time *B*) sufficient in amplitude to

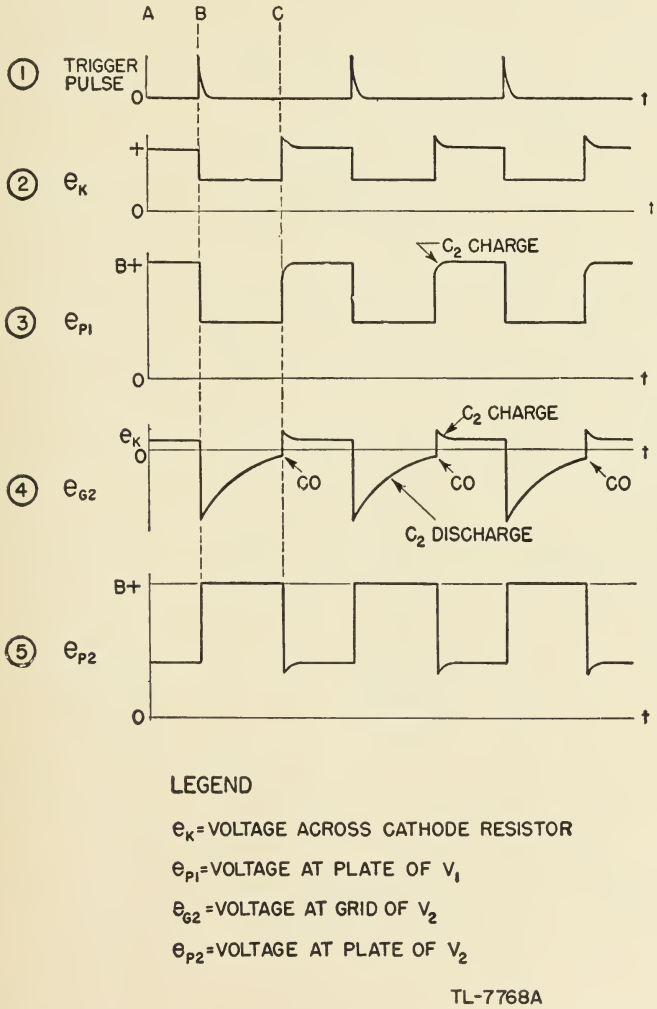

Figure 212. Waveforms in one-shot multivibrator.

raise the grid of V_1 above cut-off voltage, is impressed on the grid of V_1 through C_1.

(*d*) V_1 begins to conduct and the voltage at its plate decreases (fig. 212③, time *B*).

(*e*) This decrease passes through C_2, as the voltage across a capacitor cannot be changed instantaneously, and appears on the grid of V_2 as a negative-going voltage (fig. 212④, time *B*).

(*f*) The negative-going voltage on the grid of V_2 decreases i_{P2}.

(*g*) The voltage drop across R_K decreases, allowing more current to flow in V_1.

(*h*) The plate voltage of V_1 is still further decreased.

(*i*) The grid of V_2 goes still more negative.

(*j*) The action described in steps (*b*) to (*i*) is repeated until V_2 is cut off and V_1 is conducting. The action is practically instantaneous.

(3) The circuit remains with V_1 conducting and V_2 cut off during the interval from *B* to *C* while C_2 discharges sufficiently toward the lowered value of plate voltage of V_1 to allow the grid of V_2 to rise from its lowest value to cut-off voltage. Then—

(*a*) V_2 begins to conduct (fig. 212④, time *C*).

(*b*) The plate current of V_2, flowing through R_K, raises the cathode voltage of V_1, thus reducing its plate current (fig. 212②, time*C*).

(*c*) The decreased plate current of V_1 allows the plate voltage of V_1 to increase (fig. 212③, time *C*).

(*d*) This increase is coupled to the grid of V_2, increasing still further its plate current.

(*e*) The action described in steps (*a*) to (*d*) is repeated until V_1 is cut off and V_2 is conducting heavily. This action also is practically instantaneous.

(4) The circuit is now back in its original balanced state and will remain so until another positive pulse arrives and causes V_1 to conduct.

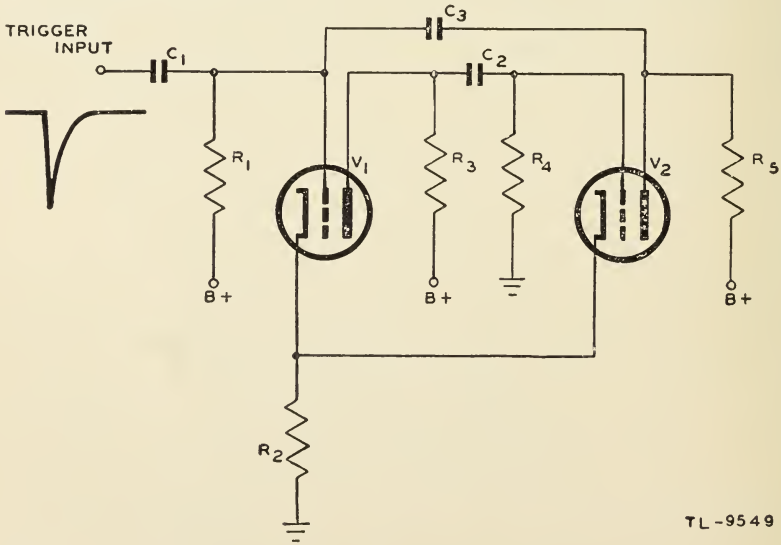

Figure 213. One-shot multivibrator with positive grid return.

This type of circuit is known as a one-shot multivibrator. Every positive trigger pulse which causes V_1 to conduct, applied to the input of the one-shot multivibrator results in a large positive-pulse output from the plate circuit of the second tube. The length of the positive-output pulse produced at the plate of V_2 is controlled by the time constant of C_2 times R_2 (fig. 212④ and ⑤). If large values of C_2 and R_2 are used, the length of the positive output is increased. A positive-output voltage pulse is produced for each positive-input trigger pulse, regardless of how frequently it occurs.

(5) The "one-shot" multivibrator illustrated in figure 213 has the grid of V_1 returned to a positive potential instead of to the cathode. In the stable condition V_1 is conducting since the grid of V_1 is held slightly positive with respect to the cathode by the connection through R_1 to the $B+$ supply, and V_2 is cut off by the bias developed in R_2 by the plate current of V_1. The grid of V_1 is only slightly positive because the voltage drop produced across R_1 by the flow of grid current is nearly equal to the supply voltage. This circuit is put into operation by a negative trigger pulse applied to the grid of V_1. This pulse decreases the plate current of V_1 and causes a corresponding increase in plate voltage of V_1. The increase of palte voltage is coupled to the grid of V_2 through the capacitor C_2, as the voltage across the capacitor cannot change instantaneously. Plate current begins to flow in V_2 and the voltage at its plate decreases. Capacitor C_3 couples this decrease to the grid of V_1 causing a further increase in the plate potential of V_1 which is impressed on the grid of V_2. This action continues until V_1 is cut off and V_2 is conducting heavily.

(6) The circuit remains in this condition as long as the discharge of C_3 maintains a sufficient negative potential on the grid of V_1 to keep the tube cut off. When C_3 has discharged sufficiently to allow the grid of V_1 to rise to cut-off, the tube conducts, and the plate potential decreases. The decrease is passed to the grid of V_2 and its plate current decreases, causing its plate potential to rise. This rise is impressed on the grid of V_1 which increases the plate current in V_1. This action takes place almost instantly, so that V_1 is quickly returned to its normal state of conduction and V_2 is again cut off.

(7) Capacitor C_2 is charged to the $B+$ supply voltage through R_2, R_{GK} of V_2, and R_3 during the time V_1 is cut off. When V_1 is suddenly

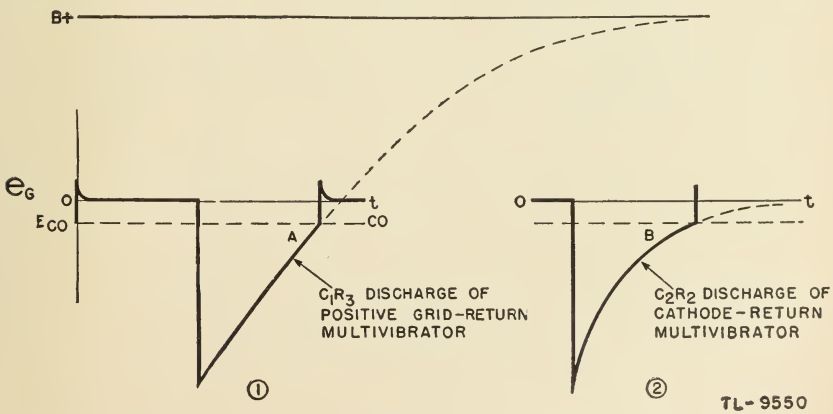

Figure 214. Grid waveforms in one-shot multivibrator with grid returned to B+ and to cathode.

made conducting again, its plate voltage drops sharply. This large negative-going voltage is coupled to the grid of V_2, cutting off the tube. The flow of current through V_1 produces a voltage drop across R_2 which holds V_2 in the nonconducting state until the next negative trigger pulse appears.

(8) The difference in action of the multivibrator with the grid returned to $B+$ and one with the grid returned to the cathode is illustrated in figure 214. In the positive grid return circuit, the capacitor discharges from the most negative value toward $B+$. Thus, only the lowest portion of the R-C discharge curve is utilized and the potential on the grid approaches cut-off voltage rapidly as indicated by the angle A in figure 214①. A small variation in supply voltage or tube action will shift the time during which the tube is cut off by only a very small amount. The discharge curve of the circuit in which the grid is returned to the cathode, on the other hand, approaches cut-off potential gradually, at the small angle B (fig. 214②). Any variation in tube action in this case causes considerable change in the cut-off period. Therefore, when very accurate timing is desired, the positive grid circuit is the preferable arrangement.

d. Cathode-coupled multivibrator. (1) The multivibrator in figure 211 is said to be *cathode-coupled* because the coupling from V_2 to V_1 takes place through the common cathode resistor, R_K. A variation of this circuit is shown in figure 215. Note that the only difference between the two circuits is the connection of R_2, the grid resistor of V_2, to ground (fig. 215) instead of to cathode (fig. 211). In both of these circuits V_1 is cut off by the voltage produced across R_K by the plate

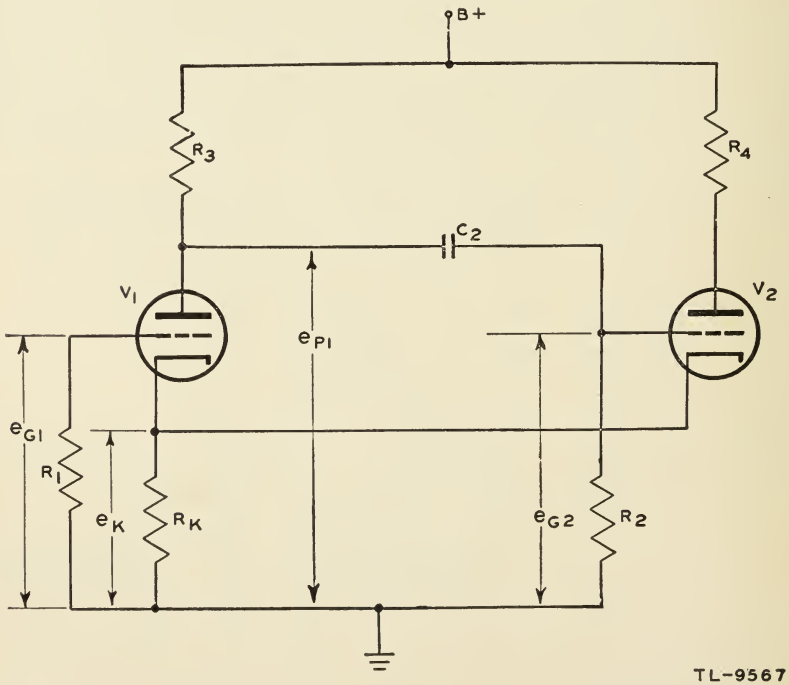

Figure 215. Cathode-coupled multivibrator using direct coupling.

current V_2 flowing through this resistor. However, the multivibrator shown in figure 215 is markedly different from that shown in figure 211 in that it is not possible for the plate current of V_2 in figure 215 to *maintain* across R_K a voltage large enough to hold V_1 cut-off. In figure 211, V_2 is normally at zero bias in the resting condition of the circuit because the grid is returned to cathode. Thus i_{P2} can produce a large voltage across R_K. However, in figure 215 the grid of V_2 is returned to ground, so that when C_2 is fully charged, the grid is at ground potential, but the cathode of this tube is above ground potential by the voltage produced across R_K by i_{P2}. Thus the bias on V_2 is equal to this voltage drop. Since it is the flow of i_{P2} which produces the voltage across R_K, it is obvious that V_2 cannot be biased beyond cut-off by this voltage. If V_1 and V_2 are the same type of tubes, it is at once apparent, also, that the voltage produced across R_K by i_{P2} cannot *hold* V_1 cut-off. Therefore the circuit of figure 215 must be a *free-running* multivibrator in which the condition of one tube alternately cuts off the other.

(2) If there is no plate potential applied to the circuit of figure 215. there will be no charge on C_2 and the grids of both V_1 and V_2 will be at ground potential. When the plate potential is suddenly applied, both

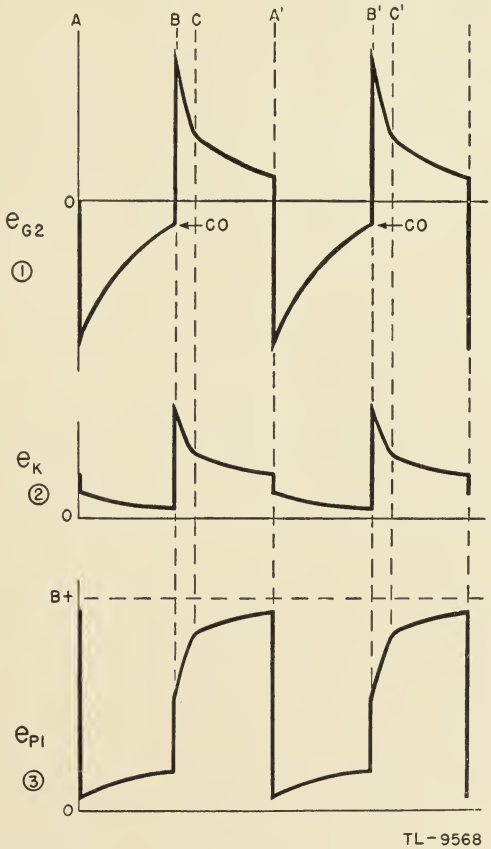

Figure 216. Waveforms in cathode-coupled multivibrator using direct coupling.

tubes will start to conduct. Since the plate current of both tubes flows through R_K, the cathode potential of both V_1 and V_2 rises above ground, producing a bias voltage which tends to limit the magnitude of the current flowing in the tubes. The flow of i_{P1} through R_3 reduces the voltage at the plate of V_1. Since the voltage across C_2 cannot change instantaneously, the drop in voltage that takes place at the plate of V_1 is coupled to the grid of V_2, further reducing the current through this tube. This reduction of current decreases the voltage developed across R_K, so that i_{P1} increases. This increased current causes e_{P1} to drop further and the conduction of V_2 is decreased even more. This action is cumulative, ending with the current in V_2 is reduced to zero and the current in V_1 a maximum. Although this step-by-step description of the multivibrator action might give the impression that a considerable time is involved, V_2 is driven beyond cut-off almost instantaneously, as at A in figure 216.

(3) Tube V_2 is held beyond cut-off during the time that C_2 discharges through R_2, R_P of V_1, and R_K. The discharge current through R_2 produces a voltage at the grid of V_2 which is negative with respect to ground and which decreases exponentially as the capacitor discharges. At time B in figure 216 the voltage at the grid of V_2 reaches cut-off, and V_2 begins to conduct. The current drawn through V_2 also flows through R_K, producing an increased voltage across this resistor. This increased voltage makes the bias on V_1 more negative so that less plate current flows through this tube. As a result of the decrease of i_{P1}, the voltage at the plate of V_1 increases. Since the voltage across C_2 cannot change instantaneously, the grid of V_2 is driven positive, increasing further the plate current of V_2. This action is cumulative and results in the current through V_1 being reduced to zero almost instantaneously

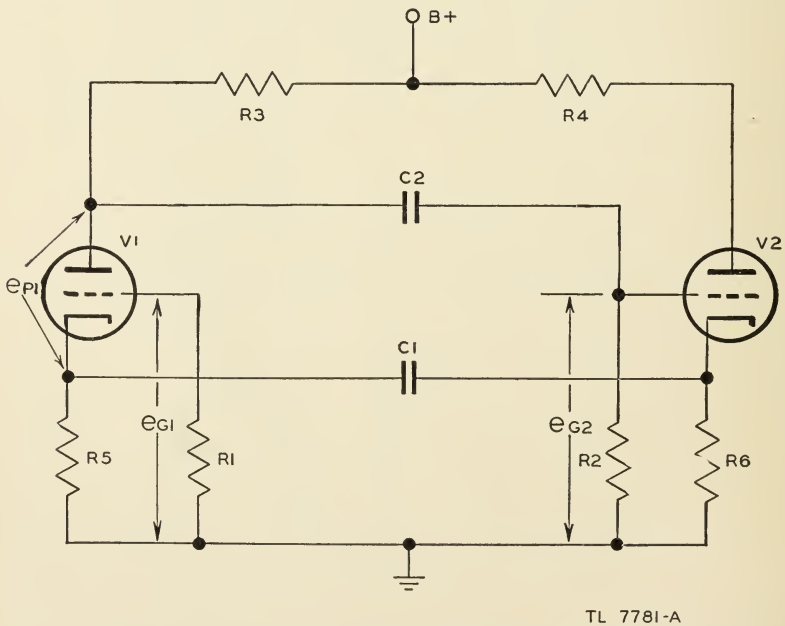

Figure 217. Cathode-coupled multivibrator with feedback through a capacitor.

and the current through V_2 being increased to a maximum. V_1 is cut off by the voltage developed across R_K when the high plate current of V_2 flows through it as a result of driving the grid of V_2 positive (fig. 216①, time B).

(4) At time B the grid of V_2 is driven highly positive, causing i_{P2} to be large, so that e_K, rises quickly. Because grid current is drawn while e_{G2} is more positive than e_K, capacitor C_2 charges relatively quickly through R_K, R_{GK} of V_2, and R_3. The capacitor has charged sufficiently by time C that e_{G2} is reduced to cathode potential at this time. Since the grid of V_2 is still positive with respect to ground, the charging of C_2 continues, but at a slower rate because when grid current is not drawn, the resistance of the charging path is through R_3 and R_2, which results in a longer time constant than the path through V_2. As C_2 charges, the bias on V_2 decreases, causing i_{P2} to decrease, which in turn decreases e_K. The grid of V_1 is held constant at ground potential, so that this tube remains cut off as long as e_K is positive relative to ground by more than cut-off voltage. But when e_K drops to the cut-off voltage, V_1 conducts and rapidly cuts off V_2 by feeding a large negative-going voltage through C_2 to the grid of V_2.

(5) Since the conduction of V_2 is unable to maintain V_1 nonconducting, the multivibrator of figure 215 is free-running. No trigger pulses are required to operate this circuit since it has no stable equilibrium condition.

(6) In another type of cathode-coupled multivibrator a capacitor is used to couple the two cathodes together. In this multivibrator the cut-off time of the grid of the second tube is controlled by the discharge of C_2 through R_2, but the cut-off time for the first tube is controlled by the discharge of the cathode-coupling capacitor through the cathode resistor of the second tube (fig. 217).

(7) In order to understand the operation of this multivibrator, assume that V_1 is conducting and that V_2 has been cut off by an action similar to that described for the circuit of figure 215. Capacitor C_2 discharges through R_2, R_P of V_1 and R_5, so that the voltage at the grid of V_2 rises from a high negative potential toward ground as the discharge current through R_2 decreases. When e_{G2} rises to the cut-off voltage of V_2, the tube starts to draw current through R_6. The rising voltage produced across this resistor is coupled through C_1 to the cathode of V_1 since the voltage across the capacitor cannot change instantaneously. The positive-going voltage which is coupled to the cathode of V_1 adds to the existing voltage across R_5, reducing the flow of current in V_1. As i_{P1} decreases, the voltage at the plate of V_1 increases, and this positive-going voltage is coupled to the grid of V_2 to increase further the current in V_2. This action around the circuit is regenerative, and it ends with the current in V_1 reduced to zero and the current in V_2 at a maximum.

(8) Capacitor C_1 is charged to the voltage existing across R_6 through the path R_5, R_P of V_2, and R_4 to the high-voltage supply. The charging current produces across R_5 a voltage which is more than sufficient to hold V_1 beyond cut-off. However, as the voltage across the capacitor rises, the magnitude of the charging current falls. Consequently the voltage across R_5 decreases and at some time it will fall below the value required to cut off V_1. At this instant, a current starts to flow through

V_1 lowering the voltage at the plate of the tube. This negative-going voltage is coupled through C_2 to the grid of V_2, causing i_{P2} to decrease. As a result of the reduction of i_{P2}, the voltage across R_6 drops, and at the same time the voltage across R_5 increases as a result of the flow of i_{P1} through it. Therefore, C_1 discharges through R_6, R_P of V_1, and R_3 in an effort to charge in the opposite direction to the voltage across R_5. The cumulative effect of the discharge of C_1 through R_6 and the negative-going voltage applied to the grid of V_2 combine to cut off V_2 almost instantaneously.

e. Conventional or plate-coupled. (1) This basic free-running multivibrator circuit is a simple two-stage resistance-capacitance-coupled amplifier with the output of the second stage coupled through a capacitor to the grid of the first tube (fig. 218). Since the signal applied to the grid of a resistance-capacitance-coupled amplifier is reversed in phase in the output, the output of the second stage is in phase with the input

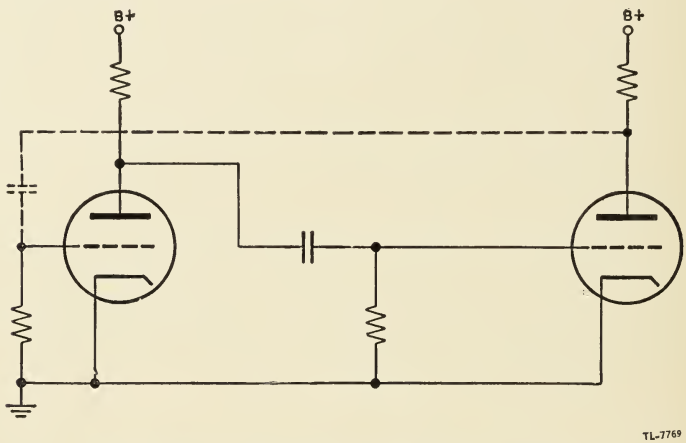

Figure 218. Two-stage amplifier with feedback (basic multivibrator circuit).

to the first, as each stage reverses the polarity of its input. Because the output of the second stage is of the proper polarity to reinforce the signal applied to the first tube, oscillations can take place. For simplicity of explanation and for compactness in schematic diagrams, the multivibrator usually is represented as shown in figure 219.

(2) When power-supply voltages are applied to this multivibrator, currents begin to flow in the plate circuits of the tubes. Also charges build up on the capacitors as the plate voltages of the tubes increase. If the two halves of the circuit are alike, the tube currents may at first be nearly equal. However, a perfect balance is impossible; there must always be some slight difference in the two currents, and any such difference will bring about a cumulative increase in the unbalance, as follows: A slight increase in the current drawn by tube V_1 occurs. This increase causes an increase of the voltage drop across resistor R_3, and thus a decrease in e_{P1}, the plate voltage of V_1. Because of the capacitor C_2, the decrease in e_{P1} is accompanied by a decrease in e_{G2}, the grid voltage of V_2, since the voltage across the capacitor tends to remain constant. A decrease in e_{G2} reduces the plate current in V_2. Thus the increase in the plate current of V_1 must be accompanied by a decrease

in the current of tube V_2. In the same manner, the decrease of i_{P2} causes an increase of e_{P2} and hence of e_{G1}, and results in an increase

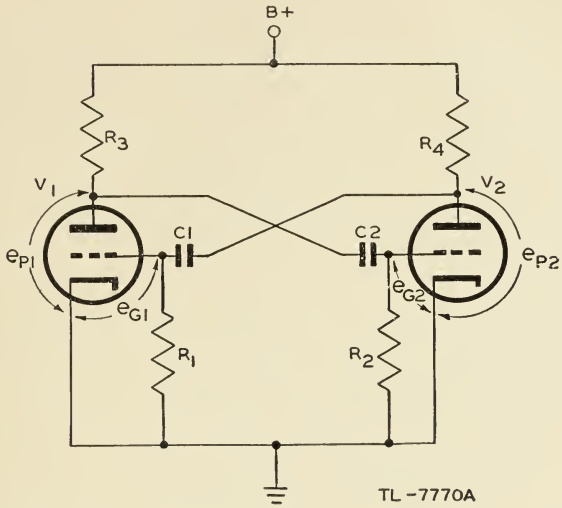

Figure 219. Basic multivibrator circuit.

of i_{P1}. Thus the slight initial unbalance sets up a cumulative, or regenerative *switching* action, which ends with i_{P2} reduced to zero, and i_{P1} increased to a maximum value. Though described as if it occurred slowly, this switching occurs with extreme rapidity—in a fraction of a microsecond in a well-designed multivibrator.

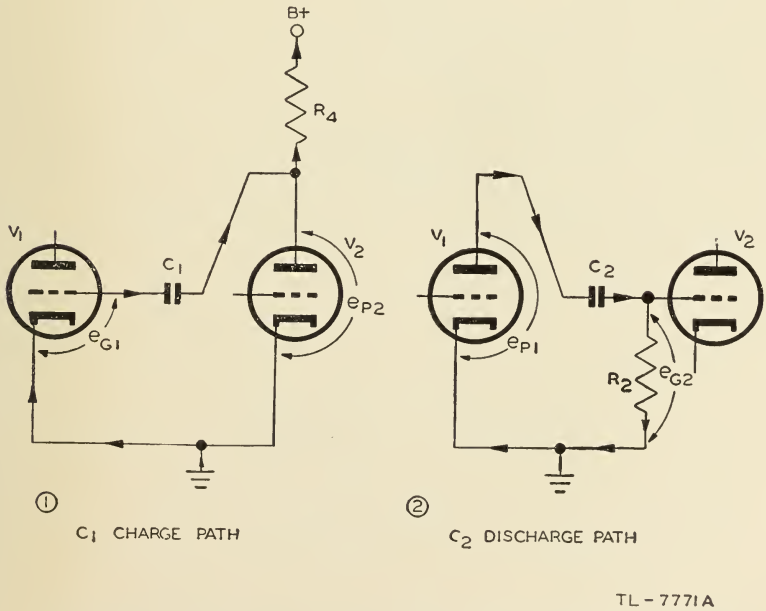

Figure 220. Charge and discharge paths in free-running multivibrator.

(3) In order to cut off plate current in V_2, the grid of that tube must be driven negative beyond the cut-off voltage. The negative grid voltage results from a charge on capacitor C_2. Since this charge must leak off through resistor R_2, as shown in figure 220②, the grid voltage does not remain negative indefinitely, but tends to return to zero as the capacitor discharges. As soon as cut-off is reached, the plate current begins to flow in tube V_2, and a second switching action takes place. This switching action is like the first except that i_{P2} is increasing and i_{P1} decreasing. Thus it ends with V_2 carrying maximum current and with V_1 cut off; that is, during the switching action the current is suddenly transferred from the plate circuit of one tube to that of the other. This switching action repeats continuously, with first one tube and then the other tube conducting.

(4) The multivibrator waveforms are shown in figure 221. The waveforms may be understood by referring to the charge and discharge paths shown in figure 220. The action in these circuits results in the waveforms between times A and B (fig. 221).

(5) At time A in figure 221, V_2 has just been cut off, ⑤, and V_1 is

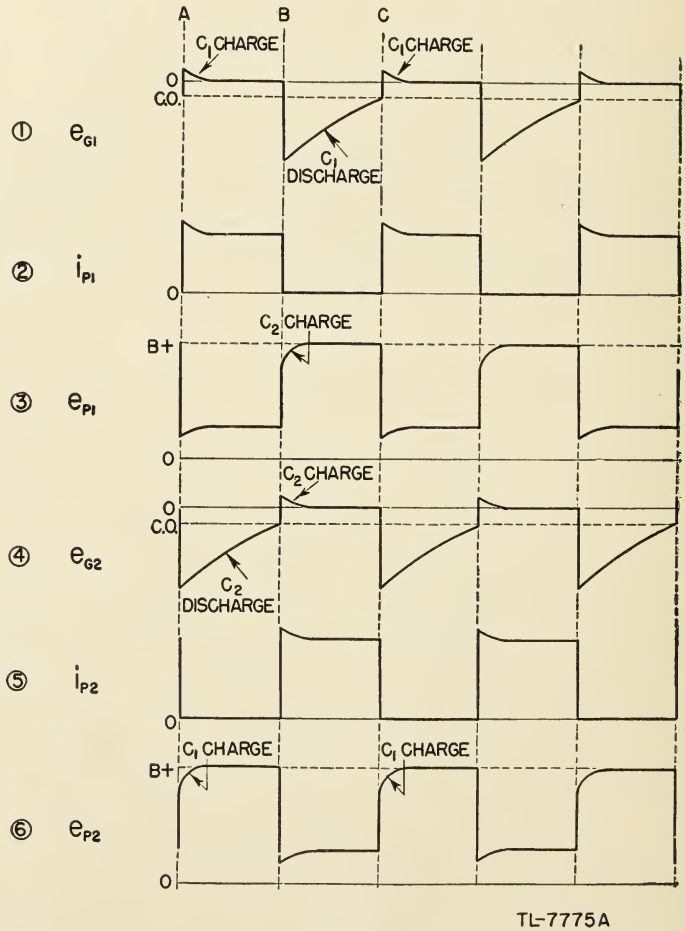

Figure 221. Waveforms in a balanced free-running multivibrator.

conducting heavily ②. During the previous half cycle, C_1 has acquired a charge, so that when V_2 ceases to conduct, the grid of V_1 is raised above ground potential, as shown in ①. Consideration of figure 220① shows that a voltage drop is produced across R_4 by the flow through it of the charging current of C_1. The plate voltage, e_{P2}, of V_2 at the instant that this tube is cut off does not, therefore, rise to the battery voltage, but is less by the amount of the voltage drop across R_4 (fig. 221⑥). Since at this instant the grid of V_1 is slightly positive, maximum plate current i_{P1} must flow through V_1. This in turn means that the plate voltage on V_1 is a minimum ③. The grid voltage, e_{G2}, of V_2 has been forced below cut-off, as previously explained, so that i_{P2} must be zero.

(6) Between A and B in figure 221, C_1 is charging through the path shown in figure 220①. Since the resistance of this path is relatively low, the time constant of the charging is short, and the circuit quickly reaches its equilibrium condition (fig. 221①). As C_1 charges, the potential at the grid of V_1 falls toward ground potential. Since the charging current flows through R_4, the voltage drop across R_4 decreases as C_1 charges. Thus e_{P2} reaches battery voltage at the same time that e_{G1} reaches ground potential (fig. 221⑥). The current, i_{P1}, through V_1 must decrease as e_{G1} decreases. This is accompanied by a decrease in the voltage drop across R_3 and thus a rise of e_{P1} (fig. 221③).

(7) While C_1 charges as described above, C_2 discharges around the path shown in figure 220②. The long time constant of this path determines the conducting time of V_1, which is the same as the cut-off time of V_2. As C_2 discharges, e_{G2} slowly rises toward ground potential (fig. 221④). However, at the instant that e_{G2} reaches the cut-off potential of V_2, the tube conducts and, as a result of the switching action previously described, cuts off V_1. Thus the condition of the circuit has been instan-

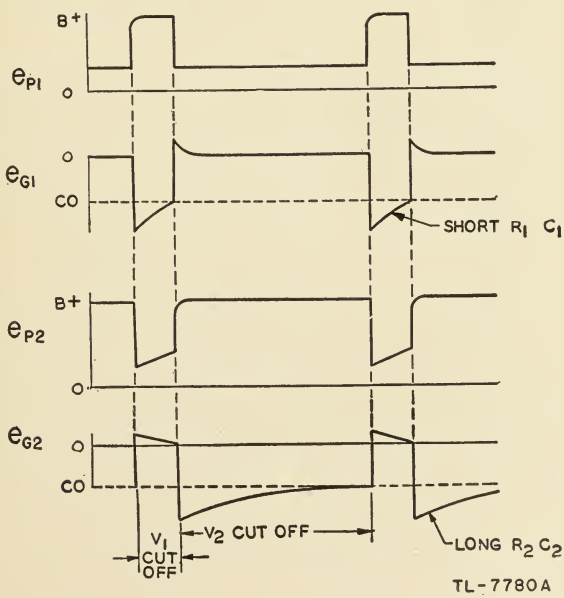

Figure 222. Asymmetrical or unbalanced multivibrator waveforms.

taneously reversed; V_2 is conducting heavily and V_1 is cut off. This condition is shown in figure 221 between B and C.

(8) Thus far the multivibrator has been considered as symmetrical or balanced—that is, with each corresponding pair of components exactly matched. In some radar applications it is desirable to obtain pulses of short duration with a relatively long period of time between pulses. To accomplish this, the time constant in the grid constant of one tube is made long with respect to the time constant of the other, so that one tube may remain cut off for only a small portion of the cycle. These relations are illustrated in figure 222. Note that since the time constant R_1C_1 is short compared to R_2C_2, V_1 is able to remain cut off for only a small fraction of the total cycle. Thus time A–B is much less than time B–C. A circuit with these output waveforms is known as an *asymmetrical* or *unbalanced* multivibrator.

f. Electron-coupled multivibrator. The circuit of figure 223 is that of a multivibrator employing pentode tubes in which the load is coupled to the oscillatory circuit through the electron stream in the tubes themselves.

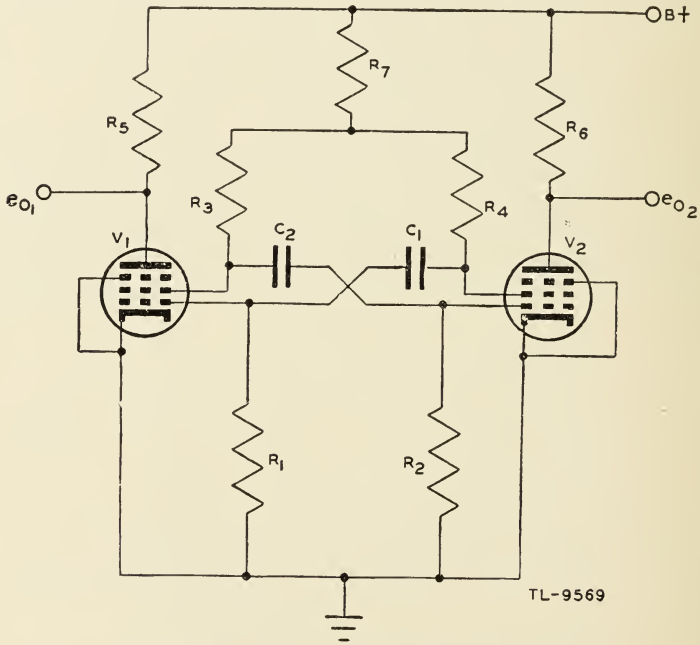

Figure 223. Electron-coupled multivibrator.

The multivibrator circuit is the conventional one, but the screen grids of the tubes are used as plates for the performance of the switching function. A portion of the electron stream in the conducting tube reaches the plate proper because it is made positive by its connection to the power supply. This portion furnishes the output of the multivibrator. The suppressor grids shield the screen and control grids from the plates and prevent changes in the load from affecting the oscillatory circuit. The frequency of oscillation is thus reasonably independent of the output. The output of V_1 is shown as e_{Q1} and that of V_2 as e_{Q2}.

g. Multivibrator synchronized by sine wave. (1) Free-running multivi-

brators are not usually used as such in radar circuits as their frequency stability is poor. To avoid this frequency instability, multivibrators are usually synchronized with another frequency which forces the period of the multivibrator oscillation to be exactly the same as the period of the synchronizing frequency. Such a multivibrator is said to be *driven* by the synchronizing voltage.

(2) Although a waveform of almost any shape may be used for synchronization, either a sine wave or a pulse is generally used. The circuit of a multivibrator which is synchronized by the injection of a sine-wave voltage in the cathode circuit of one tube is shown in figure 224. The actual grid-to-cathode voltage of V_1, which is the voltage controlling the

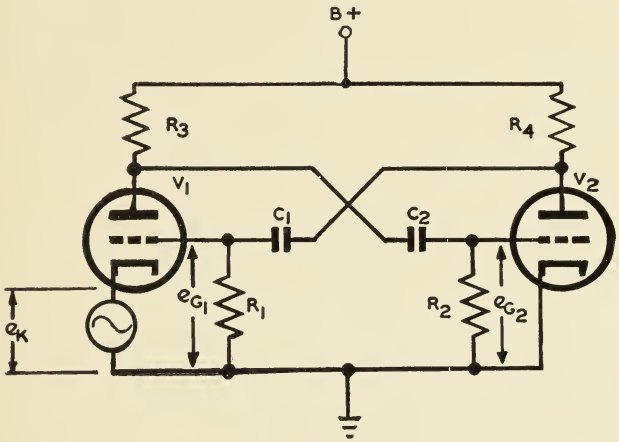

Figure 224. Multivibrator with sine-wave synchronizing voltage applied to cathode.

flow of plate current, is the difference between the grid-to-ground voltage e_{G1} and the cathode-to-ground voltage e_K. The source of sinusoidal voltage should have a low internal impedance, for otherwise the plate current of V_1 flowing through this source causes a voltage drop which alters the sinusoidal shape of the wave. Sometimes a low-voltage winding on a power-supply transformer, such as a filament winding, is used to supply this control voltage.

(3) If the multivibrator of figure 224 were balanced and running freely, the waveform of the voltage at the grid of V_1 would be as shown between A and B in figure 25②. Between A and B there is no synchronizing voltage applied, so that the cathode voltage is constant at ground potential, as shown in figure 225①. At time B the synchronizing voltage is suddenly applied, causing the cathode potential to vary sinusoidally. The voltage on the grid with respect to ground is not affected by this variation, but the grid-to-cathode potential now contains this sinusoidal component of voltage. Thus the effective cut-off voltage of the tube varies sinusoidally about the normal value in phase with the synchronizing voltage on the cathode. The cathode voltage, e_K, and the effective cut-off voltage, e_{CO}, are shown in figure 225② in order to explain the synchronizing action. The instant at which V_1 is made, conducting occurs when the e_{G1} curve crosses the e_{CO} curve.

(4) At time B the voltage of the cathode starts to rise, so that conduction of V_1 is decreased. The positive-going voltage produced at the plate of V_1 initiates the switching action, and the tube is quickly cut off. Thus e_{G1} drops along BC instead of DE as it would in the free-running condition. Capacitor C_1 discharges exponentially along curve CFG. Since

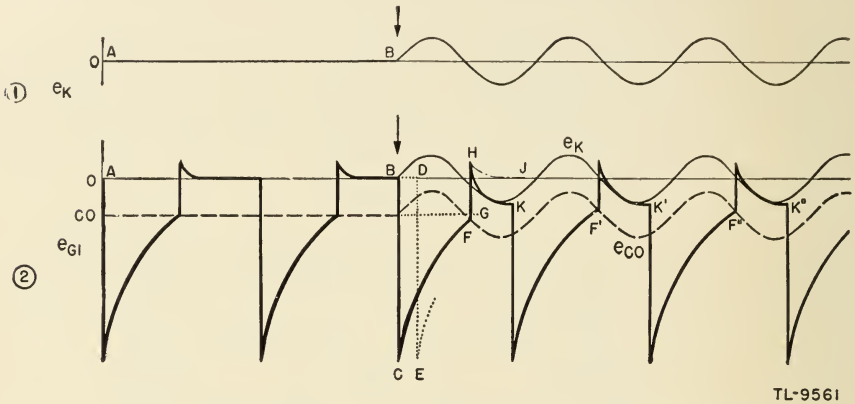

Figure 225. Waveforms in multivibrator synchronized by sine wave on cathode.

this curve intersects the e_{CO} curve at F, the switching action, by which V_1 is made conducting and V_2 is cut off, takes place at this time instead of at a short time later. Thus the switching takes place at turn F instead of at G as would be the case in a free-running multivibrator. The switching drives the grid of V_1 positive, but the grid current drawn quickly charges C_1 so that the grid returns to cathode potential. If e_{G1} followed curve HJ, as it would if the multivibrator were free running, the grid would draw current because the synchronizing voltage causes the cathode to be negative relative to ground at this time. Therefore e_{G1} follows the cathode voltage along curve HK. When the cathode voltage begins to rise, the plate current through V_1 starts to decrease. By the time K the rise in voltage at the plate of V_1 resulting from this decrease in plate current has become large enough to drive V_2 into conduction, and the tubes are very rapidly switched.

(5) The cycle of the multivibrator is forced to be somewhat shorter than the length of the free-running cycle by the action of the sine wave. Thus switching in one direction occurs at points F, F', F'', etc., and switching in the other direction occurs at K, K', K'', etc. The period of the multivibrator, KK' or $F'F''$, is seen to be equal to the period of the sine wave after the short transition interval, so that the multivibrator may be said to be synchronized. A sine wave can thus be used to control the frequency of a multivibrator. The synchronizing voltage can make the multivibrator operate either above or below its natural frequency. However, if an attempt is made to pull the multivibrator to higher and higher frequencies, a limit is reached beyond which the multivibrator synchronizes to one-half of the driving frequency. Similarly, the multivibrator may synchronize to one-third or a smaller fraction of the driving frequency, and *frequency division* may be obtained.

(6) When the sine wave synchronizing voltage is applied to the grid instead of to the cathode of one of the tubes of the multivibrator, as

shown in figure 226, the synchronizing voltage adds directly to the grid voltage. Consequently the grid-voltage waveform does not resemble that of a free-running multivibrator. Without the synchronizing signal, the multivibrator is free-running, and the grid waveform is as shown between

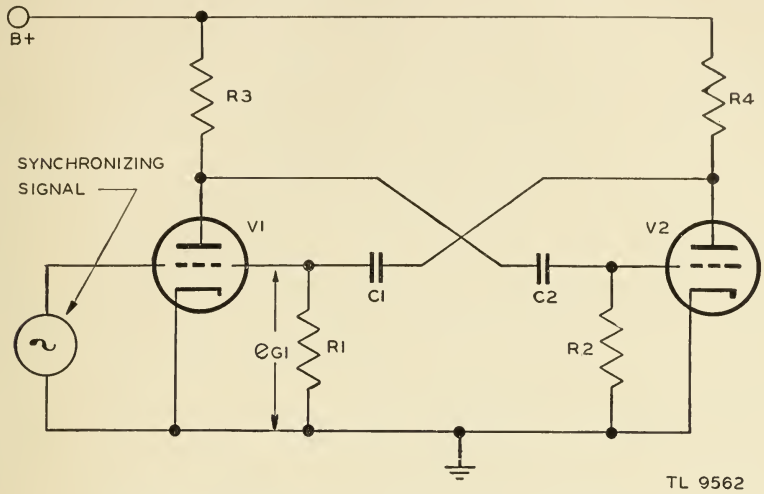

Figure 226. Multivibrator with sine-wave synchronizing signal applied to grid.

A and *B* in figure 227. The synchronizing voltage is applied slightly before time *B* in the random phase shown but, because of grid limiting, it has no effect until V_1 cuts off at its natural time *B*. Between *C* and *D*, the

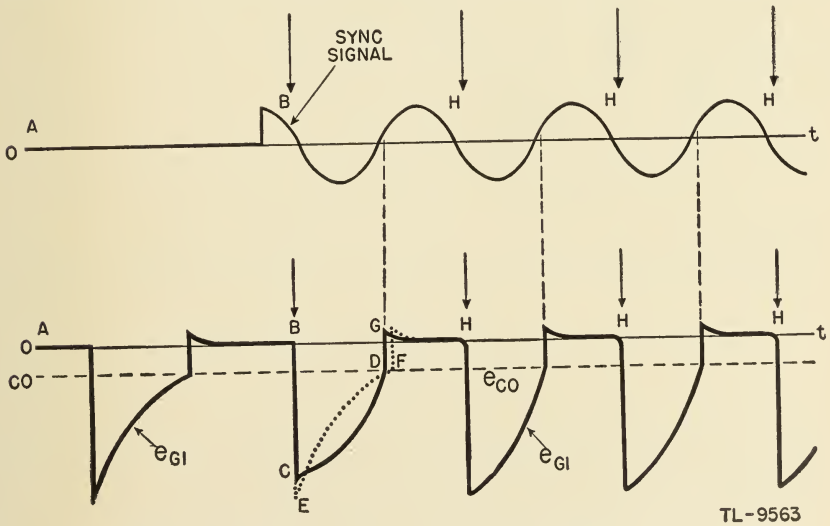

Figure 227. Waveforms in multivibrator synchronized by sine wave on grid.

synchronizing voltage adds to the normal discharge voltage which would rise along curve *EF*, and results in the distorted curve shown. Since the

synchronizing frequency is higher than the natural frequency of the multivibrator, the distorted curve reaches cut-off sooner than curve *EF*.

(7) When V_1 is conducting during the time between *G* and *H*, grid limiting occurs and prevents the synchronizing voltage from adding to the grid voltage. However, when the synchronizing signal drops below zero voltage and starts to decrease the voltage on the grid, the multivibrator regenerative action rapidly cuts off V_1. Since this action occurs at the same time, *H*, on each cycle of the synchronizing signal, the multivibrator is forced to operate at the synchronizing frequency. This latter action occurs in this way only when the synchronizing frequency is higher than the natural frequency of the multivibrator.

(8) The first cycle of the synchronizing signal between *B* and *H* will not in general be the same shape as the steady-state waveshape. The shape of this cycle depends on the time and phase at which the synchronizing signal is applied. The case shown in figure 227 is only one of many possible waveshapes for the first cycle. After one or two cycles, however, the multivibrator adjusts itself to a steady-state condition in which it operates so that the phase relation between the synchronizing signal and the multivibrator output is correct.

h. Synchronization of multivibrators by pulses. (1) Although multivibrators can be synchronized with a sine-wave voltage, more satisfactory synchronization may be obtained by the use of short trigger pulses. These pulses may be either positive or negative. Figure 228 illustrates the effect of positive pulses on the multivibrator grid waveform. A positive pulse, such as *B* or *C* in figure 228, which is applied to a tube that is

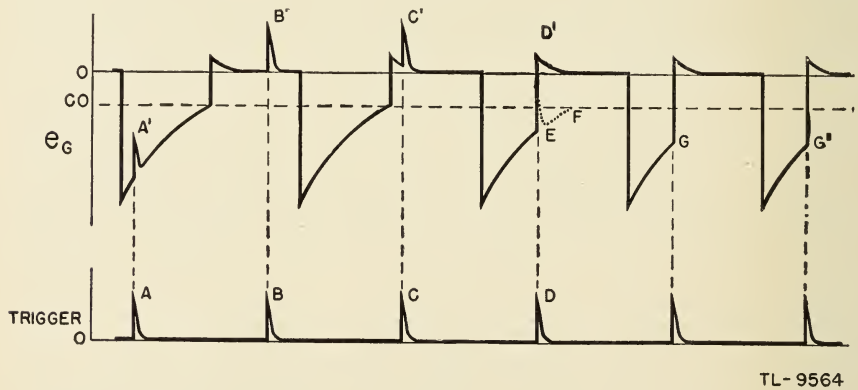

Figure 228. Waveforms on synchronized grid of multivibrator driven by positive pulses.

already conducting serves to cause only a momentary increase in current flow. *Thus a positive trigger pulse applied to a conducting tube* of a *multivibrator has no effect on the action of the multivibrator.*

(2) However, when a positive trigger pulse is applied to a nonconducting tube, and is of sufficient amplitude to raise the grid above cut-off, as pulse *D* in figure 228, the tubes are switched as current starts to flow in the tube which was formerly cut off. If the trigger pulse occurs at a time such as *A*, the grid voltage will not rise to cut-off as

shown at A', and the switching action will not be started. *Thus a positive trigger pulse applied to a nonconducting tube in a multivibrator can cause switching action to take place only if the pulse is large enough to raise the grid above the cut-off voltage.*

(3) With the exception of the trigger pulses, the grid waveform shown in figure 228 is that of a free-running multivibrator until time D is reached. The positive pulses which occur at D drive the grid above cut-off, so that the cycle of the multivibrator is shortened by an amount equal to EF. In order for proper synchronization to take place the period of the multivibrator must be greater than the interval between trigger pulses. Then the trigger pulses cause the multivibrator to switch earlier in the cycle than it would if free-running. As a result, the grid has not reached cut-off by the time G when the next trigger pulse is applied. Thus, the frequency of the multivibrator is forced to be the same as the repetition frequency of the trigger pulses, and the multivibrator will be switched consistently at time G after the transition is made from the free-running condition.

(4) A multivibrator may also synchronize to a submultiple of the trigger frequency, as shown in figure 229. Trigger A causes switching

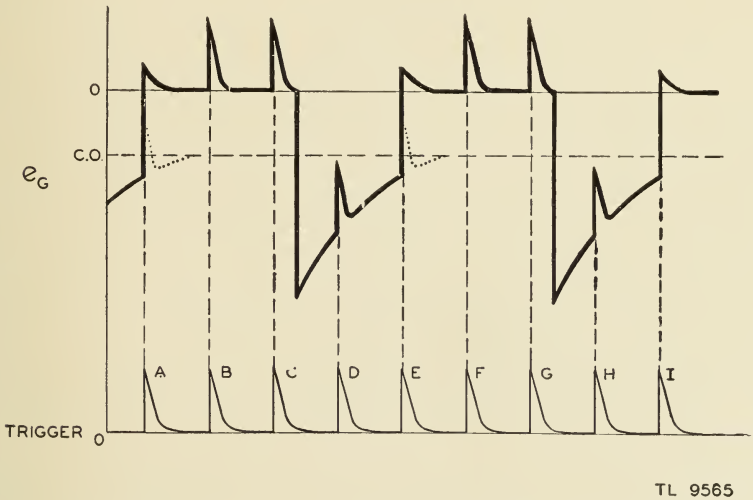

Figure 229. Waveforms on synchronized grid of multivibrator driven at a submultiple of trigger frequency.

of the multivibrator but triggers B and C have no effect since they are applied to a conducting tube. Trigger D is applied to a nonconducting tube, but it is not large enough to start conduction, so that the next pulse to cause a switching action is trigger pulse E. In the case shown every fourth trigger pulse switches the multivibrator, so that the repetition frequency of the multivibrator is one-fourth of the trigger pulses.

(5) Negative pulses can be used to trigger a multivibrator as well as positive pulses, as shown in figure 230. The first few cycles of the waveforms show the voltage variations that take place at the grids of a free-running multivibrator. As shown at B and B' and at C and C',

a negative trigger pulse applied to a nonconducting tube of a multivibrator has no effect on the operation of the multivibrator. However, if the negative trigger pulse is applied to the conducting tube, that tube

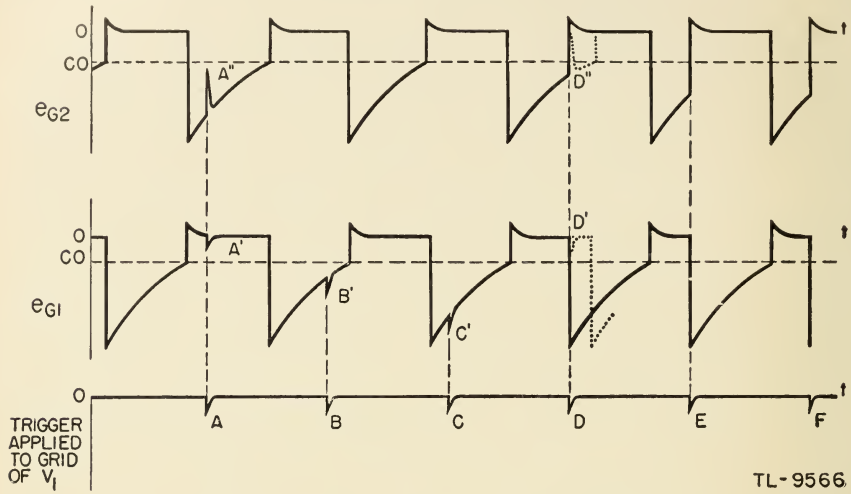

Figure 230. Grid waveforms of multivibrator synchronized by negative pulses.

operates as a single-stage amplifier and applies a larger *positive* pulse to the grid of the non-conducting tube. The negative trigger pulse A reduces the grid voltage of V_1, as at A', causing an increase in e_{G2}, as at A''. Since the change of e_{G2} is not sufficient to cause switching, trigger pulse A has no effect on the circuit. When a trigger pulse occurs in a later phase relative to the positive alternation of e_{G1}, as at D, the amplified pulse applied to V_2, at D'', raises the grid above cut-off, exactly as if a positive pulse were applied directly. Thus *a negative trigger pulse applied to the conducting tube of a multivibrator can synchronize the multivibrator,* provided that when amplified by the conducting tube *the resultant positive pulse is large enough to raise the grid voltage of the non-conducting tube to cut-off.* Note that it is not necessary for the negative trigger to reduce the grid voltage of the conducting tube to cut-off.

i. Applications. The output of a multivibrator may be used as a source of square waves, as an electronic switch, and as a means of obtaining frequency division. It often is used to introduce a time delay between the operation of two circuits by using the leading edge of the square-wave output to trigger one circuit and the trailing edge to trigger the second. Thus time can be controlled by varying the R-C constants of the multivibrator circuit. In radar the action of the multivibrator itself is usually accurately timed by triggering it with the output of a master oscillator circuit. As an electronic switch, the output of one tube allows one circuit to operate while the second is cut off by the output of the second multivibrator tube. When the multivibrator switches, the two external circuits are also switched. In radar, the chief use of multivibrators as electronic switches is to produce *gate voltages* which permit some component part of the circuit to operate only during an accurately controlled interval.

49. SHOCK-EXCITED OSCILLATOR. a. General. (1) A vacuum tube may be used as a switch to interrupt the steady flow of plate current through a resonant L-C tank circuit as a means of exciting oscillations in the tank. Such a circuit is knonw as a *shock-excited oscillator* and finds practical applications in instances where oscillations of a certain frequency occurring over short intervals of time are required periodically. It is sometimes referred to as a *ringing oscillator.*

(2) A typical shock-excited oscillator circuit is illustrated in figure 231. The grid of the switch tube is returned to the plate supply through

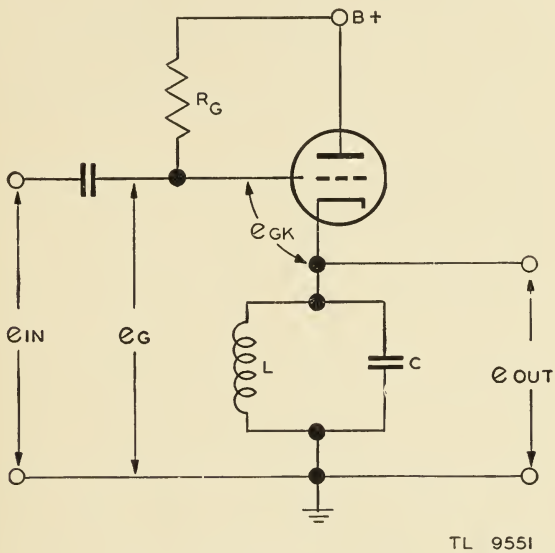

Figure 231. Shock-excited oscillator.

a large resistor R_G. The supply voltage is divided between R_G and the very low value of R_{GK} and maintains the grid at a fraction of a volt positive. Thus the tube is normally conducting practically at saturation plate current. It is in series with the L-C tank circuit; therefore the steady current flows through the inductor L. By applying suddenly a large negative voltage to the grid of the switch tube, the tube is cut off and the resonant tank is *shocked* into oscillation. As a rule it is desired to produce a certain number of oscillations during the time the negative voltage, called a *gate pulse*, is applied. By knowing the time duration of this pulse and the number of oscillations required, the frequency of the tank circuit can be determined since

$$f = \frac{1}{T} = \frac{1}{2\pi\sqrt{LC}}.$$

Since the tube acts purely as a switch, the oscillation frequency is not affected by changes in its characteristics. If extreme stability is required the tank circuit may be placed in a constant temperature oven which prevents temperature fluctuation from affecting the period of oscillation.

b. Sine-wave output. (1) At the instant the negative gate voltage, figure 232①, is applied to the grid, the current through the tube is cut off. However, the current through the inductor L cannot stop instantaneously, because the energy stored in the magnetic field around the coil cannot be dissipated instantaneously. As the magnetic field collapses there is induced in the coil a voltage which tends to keep the current flowing. Since the tube is cut off, the current must continue around the L-C circuit and charge the capacitor. During conduction the electron current flows from ground through the inductor and from cathode to plate. As the switch tube opens, this electron flow continues through L in the same direction onto the upper plate of the capacitor, charging it negatively with respect to ground. Thus, with the tank located in the cathode circuit, the *initial* voltage swing is *negative*. As the oscillations continue, their energy is dissipated by the losses of the circuit and, if the tube is cut off for a long enough period, they die out completely. This reduction of amplitude caused by losses in resistance is called *damping*.

(2) In order for the damped oscillations (fig. 232②) to continue during the whole time that the gate pulse is applied, the Q of the tank

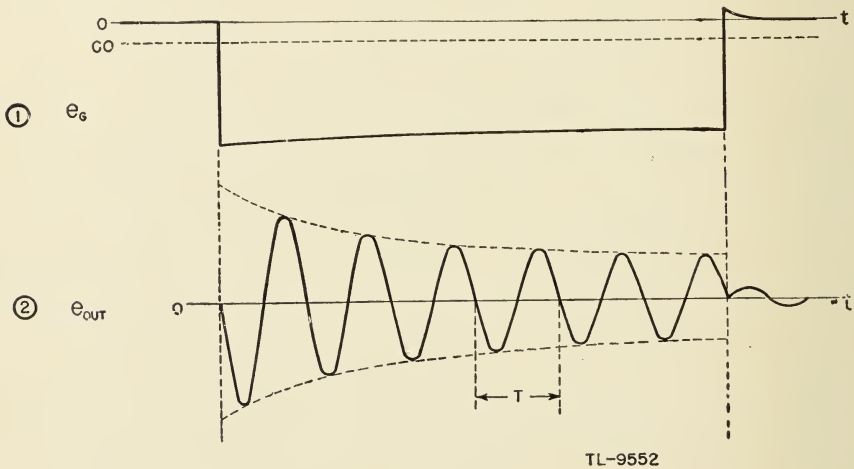

Figure 232. Input and output waveforms of the shock-excited oscillator.

circuit, that is, the ratio of X_L/R, must be high, which is a convenient way of saying that the circuit losses are low. In practice, the losses are kept as low as possible in order to keep the damping at a minimum.

(3) During the negative alternations the voltage at the cathode swings below ground potential and the voltage across the tube is greater than the value of the plate-supply voltage. This, in effect, raises the plate voltage and requires a more negative cut-off potential to prevent conduction. Likewise, during this time the grid-to-cathode voltage e_{GK} is reduced since a negative voltage on the cathode is the equivalent of a positive voltage on the grid. Both of these effects tend to cause the tube to go into conduction. Thus the negative input voltage e_{IN} must be great enough in magnitude to maintain the cut-off condition during the negative alternations of the output voltage.

(4) At the end of the input gate pulse the switch tube begins to conduct and the sudden flow of current excites a second oscillation in the L-C tank circuit. However, as current is starting instead of stopping, the first swing is positive. This oscillation is damped out much more quickly than in the previous case as a result of the shunting effect of the low output impedance of the tube. When the tube is conducting, it operates essentially as a cathode follower with a low output impedance measured from cathode to ground, which is shunted across the L-C circuit, resulting in a highly damped circuit.

c. Peaked output. (1) A shock-excited oscillator with a low Q resonant circuit may be used to produce very sharp narrow peaks at a rate controlled by the voltage applied to the grid of the switch tube. Such a circuit is shown in figure 233.

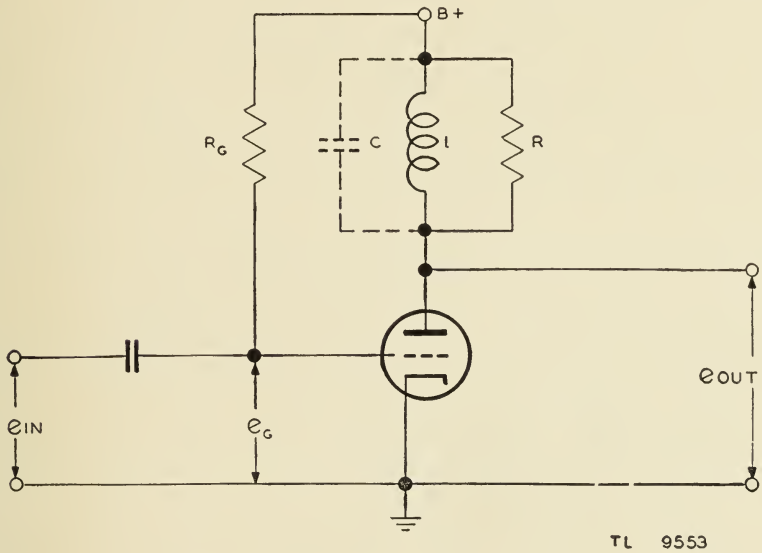

Figure 233. Shock-excited oscillator used as a peaker.

(2) The grid is returned to the plate supply through a very large resistor R_G which holds the grid voltage slightly positive when no signal is applied. Thus the switch tube normally is conducting a heavy current which flows through the inductor L located in the plate circuit. As the d-c resistance of the inductor is very low the drop across it is negligible and the plate of the tube is held practically at the voltage of the supply.

(3) The input voltage is a rectangular wave of a predetermined frequency which holds the grid far beyond cut-off during the negative portion, figure 234①. During the positive part of the input voltage the tube remains in the normal conducting state.

(4) The inductor L is tuned by its own distributed capacitance C to a frequency of the order of two megacycles per second. This resonant circuit is shunted by the Resistor R, which is of such value as to produce critical damping. Thus an oscillatory voltage developed across the

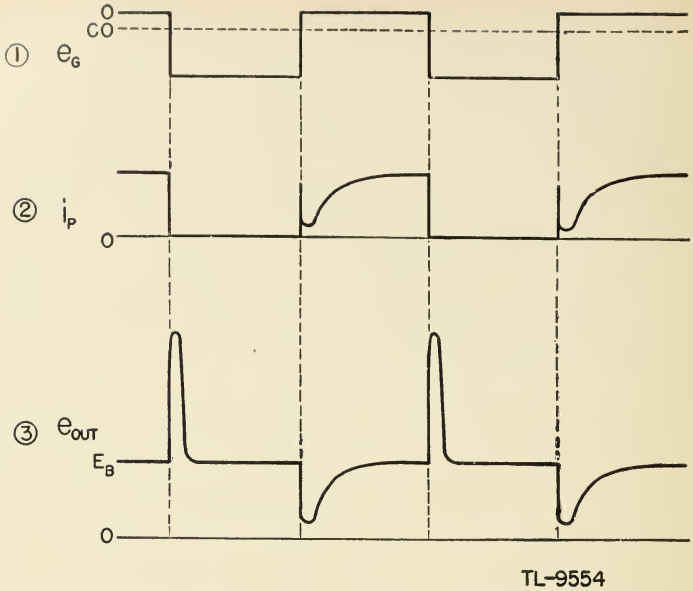

Figure 234. Waveforms of shock-excited oscillator used as a peaking circuit.

tank is damped out in precisely half the period for one complete oscillation, and the pulse is the narrowest possible for the frequency involved.

(5) At the instant the tube is cut off the plate current drops to zero. However, as described in *b* above, the current through the inductance cannot change instantaneously but begins to oscillate between *L* and *C*. A voltage is induced across *L* of such polarity that it tends to keep the current flowing. As the electron current flows toward the plate supply, the induced voltage is positive at the plate (fig. 234③). The amplitude is limited to the value to which the capacitor is charged and changes at a rate determined by the resonant frequency of the L-C circuit. Since *R* is adjusted for critical damping the energy in the oscillatory circuit is damped out completely in the half-period and there is no negative swing at the output.

(6) At the end of the negative gate pulse the tube again becomes conducting. The initial surge of plate current (fig. 234②), charges the distributed capacitance of the inductor *L*. The current then drops back to a low value and increases at the rate that current can build up through the inductor. A voltage of opposite polarity is developed across the resonant circuit since it must oppose the rise of current through the inductor. However, the narrow pulse is not produced as before because the plate-to-cathode resistance of the tube acts, in parallel with *R*, to produce an over-damped oscillatory circuit. This causes the negative swing to die out over a longer period of time as illustrated in figure 234③.

(7) The output, therefore, contains a series of narrow positive pulses which correspond in time to the leading edge of the negative gate voltage on the grid, and relatively broad negative-going pulses which correspond to the trailing edge of the gate voltage. These negative pulses may be eliminated from the output by coupling to the load through a

cathode follower which is biased to cut-off. Only the positive pulses will appear in the output of the biased cathode follower. These may be used as triggers to start the operation of associated circuits and in other applications requiring very narrow positive pulses which are repeated at a predetermined frequency.

50. SINGLE-SWING BLOCKING OSCILLATOR. a. General. (1) A blocking oscillator is any oscillator which cuts itself off after one or more cycles on account of the accumulation of a negative charge on the grid capacitor. Thus in an oscillator in which the grid swings positive with respect to the cathode, electrons are attracted to the grid and accumulate on the plate of the grid capacitor nearest the grid. Since these electrons cannot return to the cathode through the tube, they must return through the grid-to-cathode resistor. If the resistor is sufficiently large, electrons may accumulate on the capacitor faster than the resistor permits them to return to the cathode. In this case a negative charge is built up at the grid which may bias the tube beyond cut-off. After the tube is cut off, it provides no additional electrons to the grid capacitor. However, the capacitor continues to discharge through the resistor, and a point is reached eventually where the tube again conducts. Thus the process repeats and the tube becomes an intermittent oscillator. The rate of the recurrence of operating conditions is determined by the R-C time constant of the grid circuit.

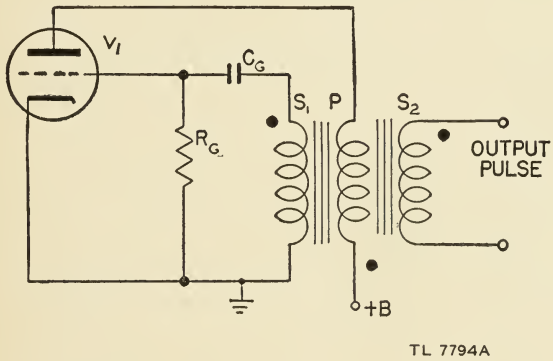

Figure 235. Single-swing blocking oscillator.

(2) There are two general types of blocking oscillators: the *single-swing* type in which the tube is cut off at or before the completion of one cycle, and the *self-pulsing* type, in which each cycle of oscillation causes the grid to become progressively more negative until the tube is biased out of operation. In radar applications the single-swing type usually operates within the audio-frequency range, while the self-pulsing type is used to produce pulses of r-f energy.

b. Action of circuit. (1) The circuit of the single-swing oscillator is illustrated in figure 235, while curves of voltage during the cycle of operation are shown in figure 236. The circuit consists of a transformer-coupled oscillator, with a capacitor in series with the grid of the triode V_1. It is assumed that the grid capacitor C_G has been negatively charged

by a preceding cycle. The tube, therefore, is biased well below cut-off. As the charge on the capacitor leaks off, the biasing voltage is reduced to the point where the tube begins to conduct. As plate current starts to flow, a magnetic field is set up around the plate winding *P* of the transformer. The dots at each winding indicate similar polarities. For example, if a current flows through one winding so that the dot end is positive, the field set up in the core induces voltages in the other windings. making the dot end positive in these windings at the same

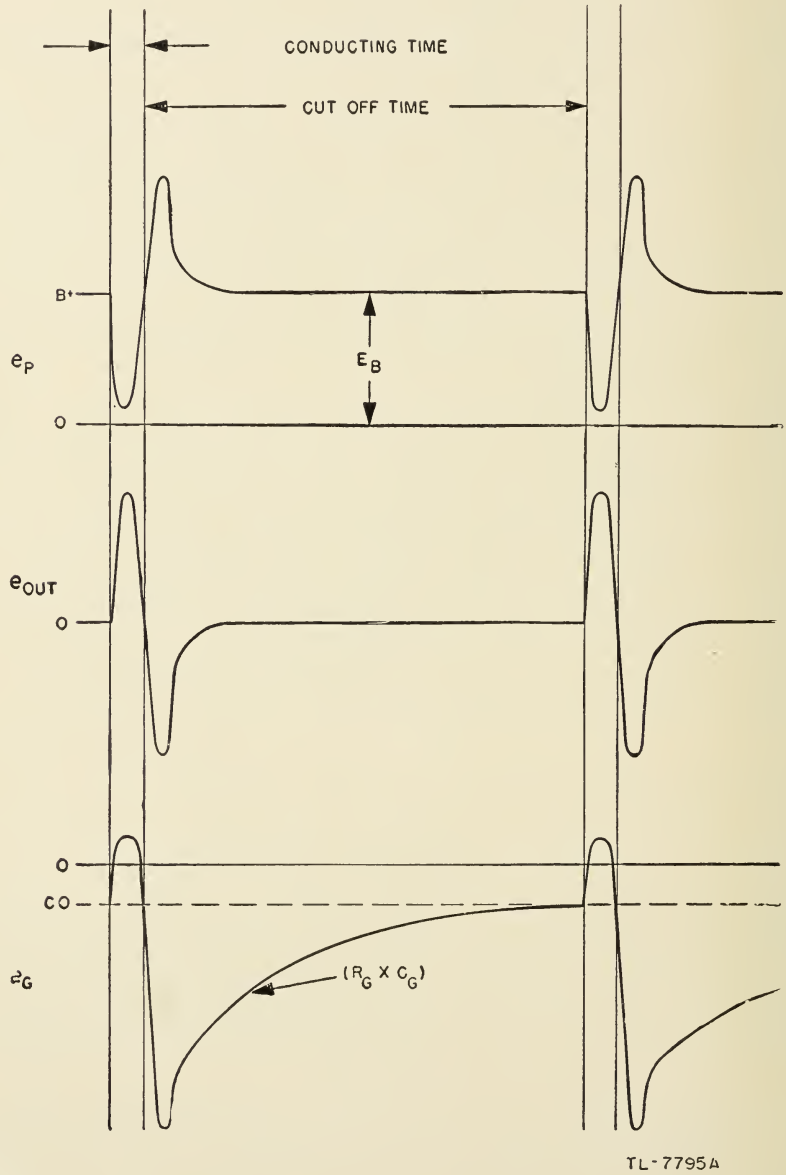

Figure 236. Waveforms of a single-swing blocking oscillator.

time. This field builds from zero to a maximum in direct proportion to the plate current, and therefore induces a voltage in the grid winding S_1. This voltage is impressed upon the grid of the tube through the grid capacitor C_G with a polarity that drives the grid more and more positive as the field in the plate winding is building up. The grid, when driven positive with respect to its cathode, draws current, and electrons accumulate on the plate of the grid capacitor nearest the grid. As the plate current reaches saturation, the field in the plate winding ceases to increase.

(2) For an instant there is no induced voltage in the grid winding and, because no charging potential is applied, the capacitor begins to discharge. This discharge causes the positive potential on the grid to become less positive, thereby causing less plate current to flow in the plate winding. The field around the plate coil starts to collapse. This collapsing field, in turn, induces a voltage in the grid winding in the reverse direction, causing the grid to become more and more negative. This process continues until the grid is driven beyond cut-off, thus completing a cycle of operation. Oscillation does not start again immediately, however, because the grid-current flow when the grid is positive builds up enough charge on the grid capacitor to hold the tube cut off until some of the charge leaks off through the grid resistor.

(3) The time consumed by the rise and decay of plate current is determined by the inductance and resistance of the transformer. The time between pulses is determined primarily by the value of resistance, the grid capacitance being fixed because of pulse width requirements.

51. SELF-PULSING BLOCKING OSCILLATOR. a. Hartley oscillator principle. The circuit shown in figure 237① is a conventional Hartley oscil-

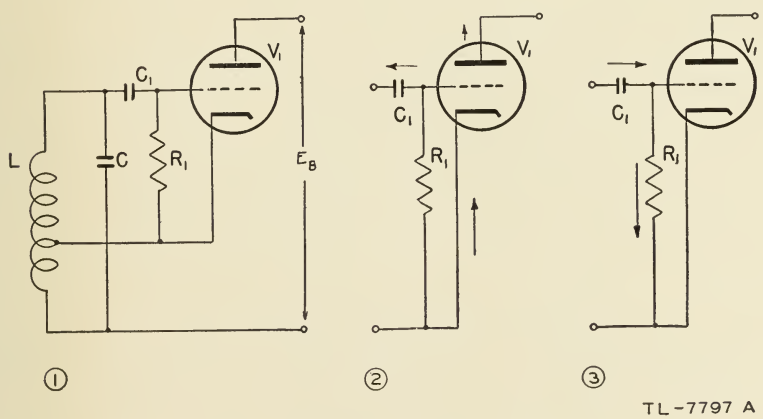

Figure 237. Hartley oscillator showing electron flow (C_1R_1 selected to make a self-pulsing oscillator).

lator, commonly used for the production of r-f signals. The frequency of the oscillations is determined by the L-C constant of the resonant tank circuit. Bias for the tube is provided by grid current which charges capacitor C_1 through the cathode-to-grid resistance R_1 (fig. 237②).

The resistor R_1, in parallel with C_1 as far as grid current is concerned, permits C_1 to discharge during the portion of the r-f cycle when the grid is not positive with respect to the cathode (fig. 237③). The net result is a bias on the grid which is proportional to the amplitude of the r-f voltage across the grid tank circuit. Thus a stable oscillatory condition exists.

b. Pulsing action. If the time constant of the R-C circuit composed of grid-leak resistor R_1 and grid capacitor C_1 is increased greatly, usually by an increase in R_1, the charge on C_1 cannot leak off rapidly enough to follow fluctuations of r-f voltage caused by irregularities in the electron-stream. As a result, each successive cycle adds a greater charge to the grid capacitor until a point is reached where the voltage across C_1 is so high that the amount of feedback provided from the plate circuit is not sufficient for oscillations to continue. The circuit does not break into oscillation again until the voltage across C_1 is low enough to allow V_1 to conduct. This combined action results in periods of oscillation and periods of rest. Hence, the operation of the oscillator is intermittent and is said to be self-pulsing.

c. Bias of self-pulsing oscillator. Figure 238 shows that the circuit of figure 237① starts functioning at the point where the grid capacitor C_1 is discharged completely. Thus the grid bias starts out at a zero value. During the initial pulse, which consists of a number of cycles, the grid bias increases until it reaches the point at which oscillations cease; from this point, and for each succeeding pulse, the grid bias varies only between values at which oscillations start and stop.

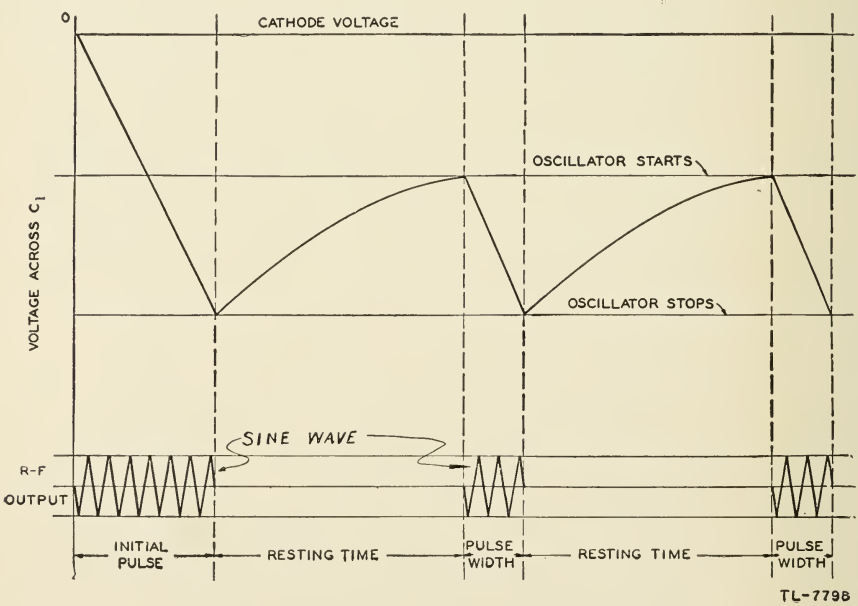

Figure 238. Intermittent pulses of r-f energy produced by self-pulsing action.

d. Oscillator output. The self-pulsing oscillator often is said to oscillate at two frequencies, as follows:

(1) The fundamental radio frequency, determined by the L-C constant of the tank circuit.

(2) The pulsing frequency, determined by the R-C constant of the grid circuit. The rate at which these pulses occur is measured in pulses per second and is known as the *pulse-recurrence frequency.*

e. Action of grid capacitor. The average grid voltage at V_1 at figure 237① is shown in figure 238. The actual grid voltage at any instant, however, has quite a different appearance. It must be understood that the grid of the oscillator swings positive for every positive-going portion of the cycle, thus charging the grid capacitor C_1. If five cycles are necessary to provide a grid bias that stops oscillations, the grid of V_1 has to go positive five times during each pulse. Figure 239 illustrates this condition, in which the grid of the oscillator goes positive with respect to its cathode five times. During each of these swings the grid capacitor C_1 receives a net increase of charge, because the grid leak resistor does not completely drain off the charge on the negative part of the cycle. As the

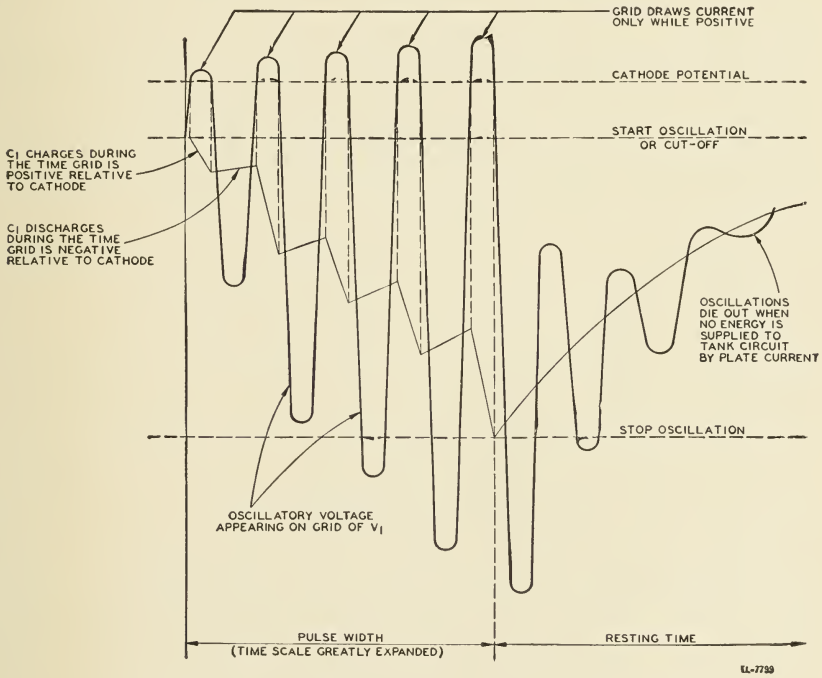

Figure 239. Change in grid bias caused by self-pulsing action.

charge on the grid capacitor builds up, a point is reached at which the grid voltage is sufficiently negative to stop oscillations.

f. Pulse width. The period of time during which the circuit is oscillating, known as the pulse width, is determined by the size of the grid capacitor C_1. If this capacitor is small it takes a relatively small time to charge up, and the result is a narrow pulse. If the grid capacitor is large it takes a relatively long time for the grid bias to build up, and the result is a wide or long pulse.

g. Resting time. The period of time during which the oscillator is in a quiescent or resting condition is determined primarily by the R-C time constant. If this time constant is long, it takes a long period of time for the charge to leak off, and the resting time is comparatively long. On the other hand, if the time constant is short, the period of time required for the charge to leak off is smaller and the resting time is comparatively short. Hence, the choice of grid-leak resistor and grid-leak capacitor determines the pulse-recurrence frequency of the self-pulsing oscillator.

52. PHASE SHIFTING. a. General. For an understanding of phase splitting and phase shifting the current and voltage relationships in R-C and R-L circuits should be recalled:

(1) The current and voltage are in phase in a resistor connected in an a-c circuit.

(2) The current leads the voltage by 90° in a capacitor connected in an a-c circuit.

(3) The current lags the voltage by 90° in an inductor connected in an a-c circuit.

(4) When a resistor and capacitor are connected in series in an a-c circuit, the voltage across the resistor leads the voltage across the capacitor by 90°.

(5) When a resistor and an inductor are connected in series in an a-c circuit, the voltage across the resistor lags the voltage across the inductor by 90°.

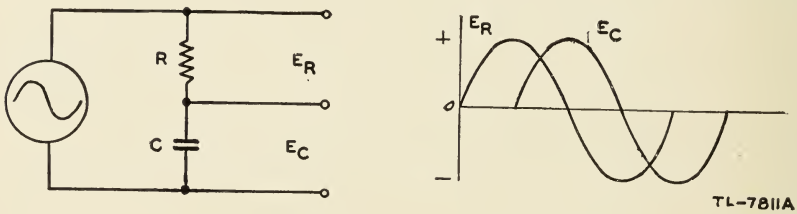

Figure 240. R-C phase-splitting circuit.

b. Phase-splitting circuits. (1) When a resistor and a capacitor are connected in series with an applied sine-wave voltage (fig. 240), two output voltages can be obtained which differ in phase by 90°. The voltage across the resistor R is always in phase with the current in R, while the voltage across capacitor C is always 90° out of phase with the current flowing in C. Therefore, the voltage outputs across resistor R and capacitor C (E_R and E_C) are 90° out of phase with each other. Such a circuit, in which two outputs are used, is called a phase-splitting circuit.

(2) A similar condition results when a resistor and an inductor are used (fig. 241), except that the direction of the phase shift is reversed. Since an inductor in an a-c circuit causes the current to lag the voltage by 90°, the output voltages of the phase-splitting circuit differ by 90°, and the voltage across the resistor lags the voltage across the inductor.

c. R-C phase-shifting circuit. (1) The R-C phase-splitting circuit (fig. 240) produces a phase shift or phase difference of 90° between the

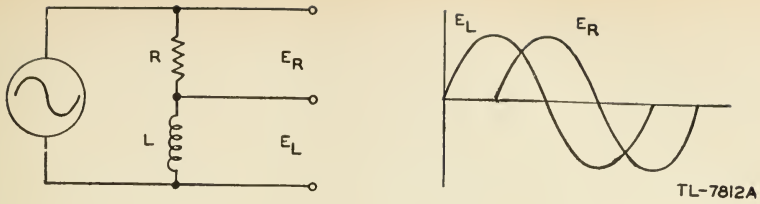

Figure 241. R-L phase-splitting circuit.

voltage across the resistor and the voltage across the capacitor. The shift in phase between one of these voltages and the supply voltage depends upon the ratio between the resistance and the reactance in the circuit.

(2) When the resistance is large with respect to the capacitive reactance (fig. 242①), most of the opposition to current flow is caused by the resistance, and the effect of the capacitor is small. The current through the circuit is therefore almost in phase with the supply voltage. Since

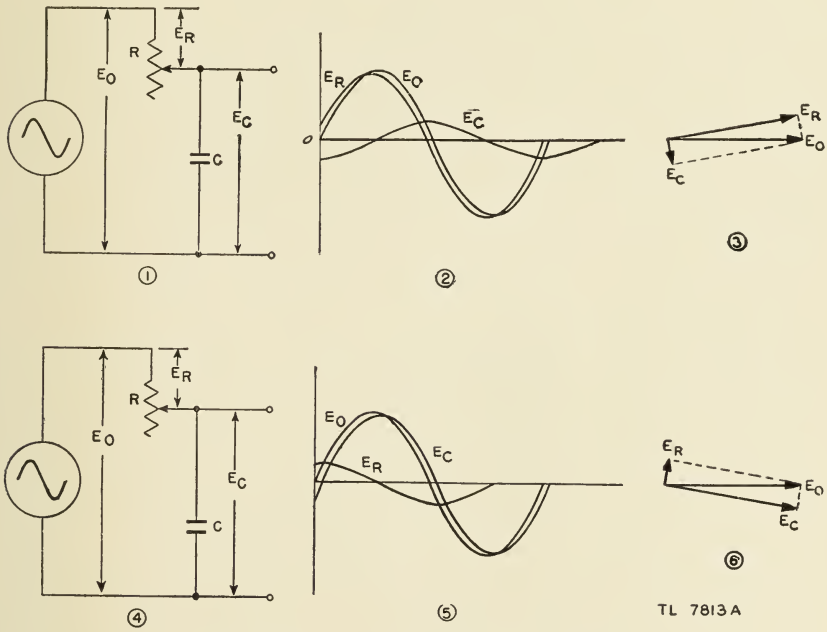

Figure 242. R-C phase-shifting network.

the voltage drop across the resistor is in phase with the current, E_R is almost in phase with E_o. The output voltage across the capacitor is nearly 90° out of phase with the voltage across the resistor. This phase relationship is shown in figure 242② and in the vector diagram ③.

(3) When the resistance is small with respect to the capacitive reactance (fig. 242④), most of the opposition to current flow is caused by the capacitor. The current in the circuit therefore leads the applied voltage

nearly 90°. The voltage across the resistor, which is in phase with the current, is approximately 90° out of phase with the applied voltage. Therefore, the voltage across the capacitor, which is 90° out of phase with the voltage across the resistor, is nearly in phase with the supply voltage. This phase relationships is shown in figure 242⑤ and the vector diagram ⑥.

(4) A phase-shifting circuit, therefore, may be composed of a capacitor and a variable resistor connected across a sine-wave supply voltage. The phase of the output voltage is shifted in relation to the input voltage by variations in the amount of resistance. When the output voltage is across the capacitor, very little resistance in the circuits gives an output almost in phase with the input. A high resistance, on the other hand, gives an output voltage which lags the input voltage.

(5) The output can also be taken across the resistor. In this case the direction of phase shift is reversed. Increased resistance brings the output and input voltages more nearly into phase with each other, while decreased resistance results in a greater degree of phase shift.

d. R-L phase-shifting circuit. (1) Substitution of an inductor for the capacitor in the circuit of figure 242 produces an R-L phase-shifting circuit (fig. 243① and ④). The phase relations between the input and output voltages can be seen in figure 243② and ⑤ and in the vector diagrams ③ and ⑥. Since in the case of inductance the current lags the voltage, the voltage across the resistance always lags the voltage across the inductance. The output voltage normally is taken from across the inductance. An increase in the resistance of the phase-shifting circuit increases the difference in phase between input and output voltages. A decrease in the resistance brings the input and output voltages more nearly into phase with each other.

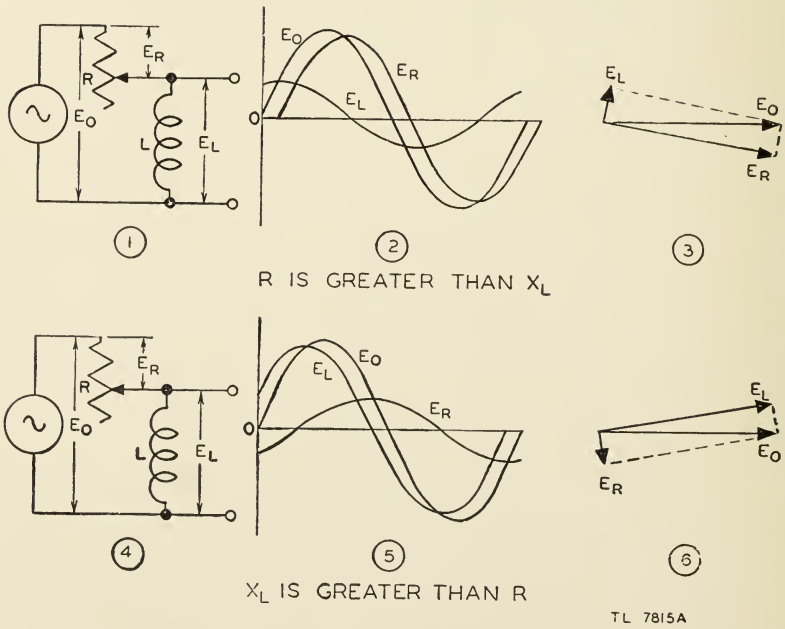

Figure 243 R-L phase-shifting network.

(2) One disadvantage of the R-C and R-L types of phase-shifting circuits is that the voltage across either the capacitor or inductor becomes smaller and smaller as the resistance is increased. As a result, these networks are not always satisfactory in a circuit in which a definite output voltage is required. They are practical, however, as networks which can be adjusted to give a definite fixed value of phase shift.

e. Use of phase-shifting circuits. Phase-shifting circuits are used for two general purposes:

(1) To obtain a definite degree of phase shift which may be fixed or adjustable within small limits. For example, this type of circuit is used to correct a shift in phase which otherwise occurs in the equipment. Either the R-C or the R-L phase-shifting circuit can be used for this purpose.

(2) To obtain a shift in phase continuously variable over 360°, which can be adjusted accurately to any desired degree of phase shift. Either an R-C or R-L phase-shifting circuit alone cannot be used for this purpose. However, an R-C circuit is used as a part of the Helmholtz-coil arrangement, which enables a continuously variable degree of phase shift to be obtained at a fixed voltage output.

f. Rotating magnetic field. (1) The Helmholtz-coil phase-shifting circuit depends for its operation upon the generation of a rotating magnetic field by its primary coil assembly. Therefore, the properties of a rotating magnetic field must be considered.

(2) The field around an electromagnet is directly proportional to the current flowing through it, and the polarity of the field is determined by the direction of current flow. When two magnetic fields are produced in the same space, the direction and magnitude of the resultant field is determined by the *interaction* of the two fields and is the *vector sum* of the two fields.

(3) The method of producing a rotating magnetic field by the action of two sets of electromagnets is shown in figure 244. At position ①, current flows through the vertical coils, producing a concentrated magnetic field between the upper and lower coils. The lines of force of this field point upward. At position ②, current flows through both sets of coils, producing a distributed magnetic field. The fields produced by each set of coils add to produce lines of force pointing along a diagonal upward and to the right. In other words, the field has rotated 45° in a clockwise direction. At position ③, current in the vertical coils is zero, but current in the horizontal coils is at a maximum. This result is also shown by the curves of current (or field) in which the dotted line refers to the vertical coils and the solid line to the horizontal coils. The magnetic field now points horizontally to the right representing 90° of rotation. Position ④ shows a reversal of the currents from position ① and therefore represents a 180° shift in the direction of the field. Likewise position ⑤ is a reversal of position ③, representing 270° rotation. Position ⑥ is the same as ①, showing the completion of 360° rotation or one revolution of the magnetic-field flux. Thus, if alternating current is made to flow in the vertical and horizontal coils the field can be caused to rotate uniformly.

(4) Figure 245① represents the condition in which the current in the vertical coils is much greater than the current in the horizontal coils.

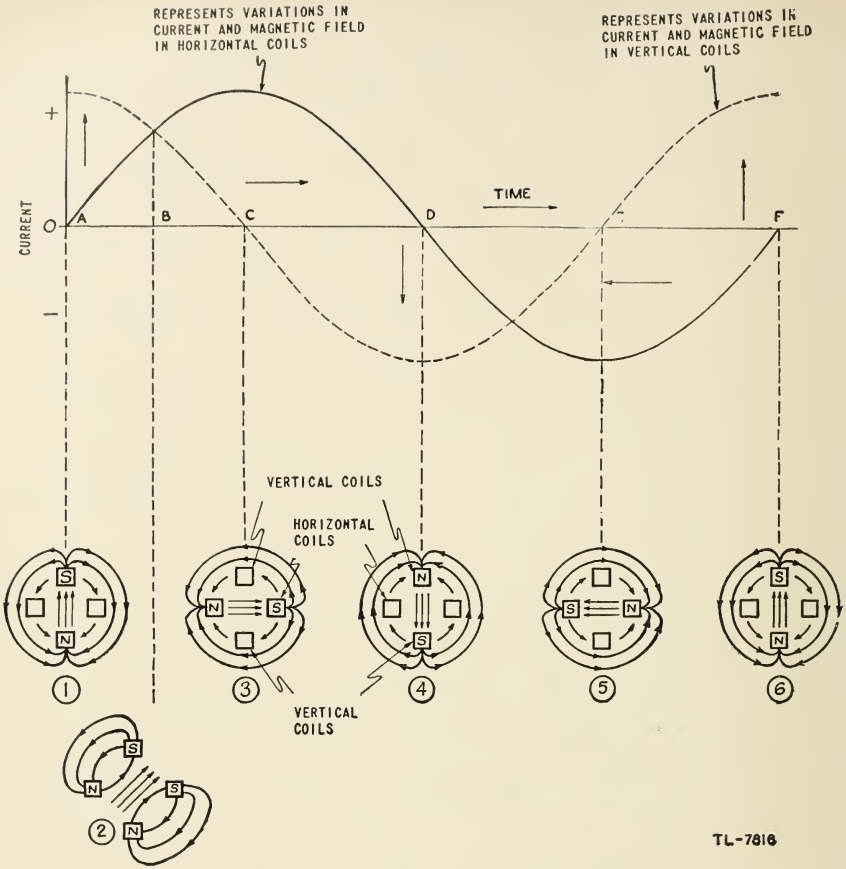

Figure 244. Rotating magnetic field in Helmholtz coil.

Line *A* corresponds to the field produced by the vertical coils and line *B* to the field produced by the horizontal coils. Line *C* gives the direction and magnitude of the resultant field. In figure 245②, corresponding to figure 244②, the current producing *A* is smaller, but the current producing *B* is larger, keeping *C* the same length but changing its direction.

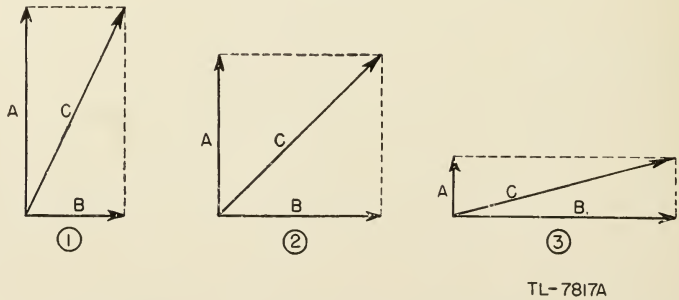

Figure 245. Determination of resultant magnet fields.

In figure 245③ the current in the vertical coils is very small, but the current in the horizontal coils is so large that the resultant field *C* is still the same.

(5) Thus, if the circuit is so adjusted that the currents in the horizontal and vertical coils are always 90° out of phase and their maximum amplitudes are equal, a sine-wave input produces a rotating field in the space between the coils. The direction of this field rotates through 360° for each cycle of an input sine wave, while the magnitude of the field remains constant.

g. Helmholtz-coil phase-shifting circuit. (1) The Helmholtz-coil phase-shifting circuit (fig. 246) uses two sets of coils for the primary circuit and obtains the necessary 90° difference in phase by means of a capacitor and resistor connected as a *fixed* phase-shifting circuit in series with one

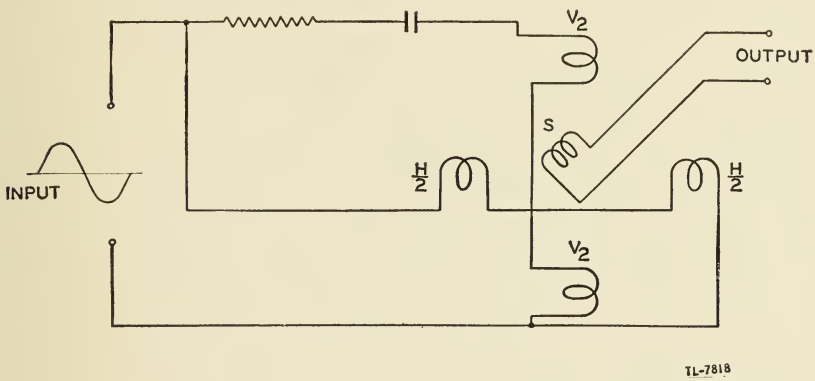

Figure 246. Helmholt-coil circuit.

set of coils. The horizontal-and-vertical-coil circuits must be carefully matched so that the maximum currents in each are equal. Since the horizontal coils are connected across the input line, the current through them lags the input voltage by almost 90°. The same condition would exist in the vertical coils if they, too, were connected directly across the input terminals. But if a capacitor and an adjusting resistor are added in series with the vertical coils, this circuit can be adjusted so that the current through the vertical coils is exactly 90° out of phase with the current in the horizontal coils. This is the condition required to obtain a rotating magnetic field when a sine-wave voltage is applied. A secondary coil *S* is pivoted in the center of the space between the horizontal and vertical coils so that it can be rotated manually and adjusted to any desired position relative to the primary coils. The rotating magnetic field formed by the currents flowing in the primary coils induces a voltage in the secondary coil. The phase relation between the output voltage and the input voltage depends upon the physical position in which the secondary coil is placed.

(2) In the rotating magnetic field (fig. 247), if some fixed point *O* is used as a reference, the magnetic lines of force point toward *O* once during each cycle. The same condition is true for any other fixed point such as *P*. However, since points *O* and *P* are separated by some angle (135° in this case), the magnetic field points toward them at different

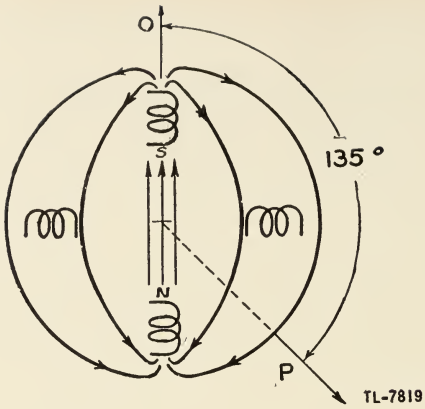

Figure 247. Phase shift between line voltage and induced electromotive force.

times during each cycle. If the magnetic fields seen at *O* and *P* at the same instant are plotted, the resultant curves are 135° out of phase (fig. 248). If the secondary coil is so placed that its axis passes through point *O* and the line voltage is maximum when the lines of force point to *O*, the electromotive force produced in the coil and the line voltage are maximum at the same time; in other words, they are *in phase*. However,

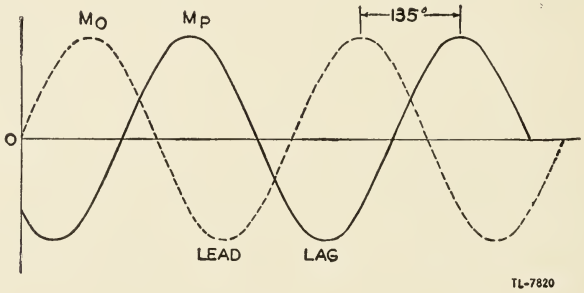

Figure 248. Magnetic fields seen at O and P of figure 247.

if the coil is rotated to the position where its axis points to *P*, a maximum electromotive force is not induced until the magnetic field rotates through 135°. The electromotive force in the secondary or pick-up coil and the line voltage are then 135° *out of phase*. Hence, any position may be selected for the axis of the pick-up coil to obtain any phase relationship desired between the line voltage and the induced electromotive force. A mechanical rotation of 1° produces a phase difference of 1° between line voltage and induced electromotive force.

(3) In order to keep the current in the secondary coil as low as practicable, a high resistance must be connected across the output of the coil. This is necessary since any appreciable current flowing in the secondary coil would produce a magnetic field which would react with the primary field and change the phase relationship between the currents in the two

sets of stationary coils. The output of the circuit must be fed to a voltage amplifier.

(4) The Helmholtz-coil phase-shifting circuit provides a means of obtaining any desired degree of phase shift, through the entire cycle of 360°, by the mechanical placement of the secondary coil in a previously calibrated position.

53. ELECTRONIC SWITCHING. a. General. An electronic switch is a device which makes use of the properties of gas-filled or high-vacuum tubes for closing, opening, or changing the operation of an electronic circuit. The electronic switch is more sensitive than a mechanical switch, is very fast in operation, and is usually silent in operation.

b. Multivibrator. (1) A multivibrator may be used to change circuit

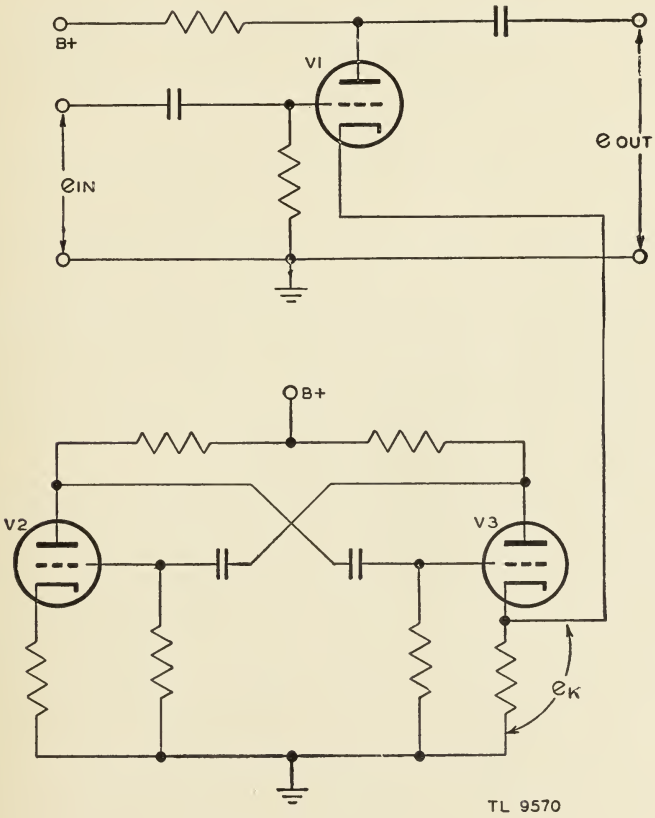

Figure 249. Multivibrator electronic switch used to provide a gate voltage.

connections rapidly and continuously. For instance, in figure 249 the voltage developed across the cathode of a multivibrator tube is used to cut an amplifier tube off and on at the multivibrator frequency. This

action, known as gating, is illustrated in figure 250. The input, e_{IN}, consists of short pulses at regular intervals. The cathode voltage of V_3, e_K, is applied to the cathode of V_1 in the phase and frequency shown. The output is shown as e_{OUT}. While V_3 is conducting, sufficient voltage is

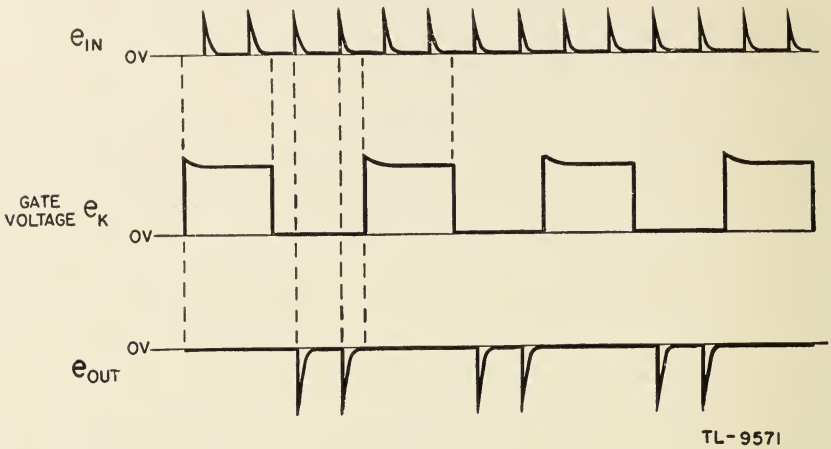

Figure 250. Waveforms showing control exerted by gate voltage.

developed across its cathode resistor to cut off V_1. When V_3 is not conducting, V_1 will conduct and amplify the input pulses. The action is as if V_1 were a gate that was opened to allow two pulses to pass, and then closed to eliminate two pulses. The voltage e_K is known as the gate voltage.

(2) A multivibrator switching action may be used to show two or more signals on an oscilloscope screen simultaneously. Such an arrangement can be used for the comparison of any two signals. Although the two signals under study are not actually on the oscilloscope screen at the same instant, they appear so to the human eye.

(3) This signal-comparison arrangement may be obtained by the electronic switching circuit shown in figure 251. Tubes V_1 and V_2 comprise a conventional multivibrator circuit. Tubes V_3 and V_4 are two amplifiers with separate grid-input circuits and with plate circuits joined capacitively to give a common output. Input signal A is fed to the grid of V_3 and input signal B to the grid of V_4. Both signals appear in the common plate circuit. Since it would be undesirable to have the two output signals mix with each other, a switching voltage is required to bias the amplifier tubes V_3 and V_4 alternately in and out of operation. Suitable switching potentials are obtained at the cathodes of the multivibrator tubes V_1 and V_2 and are impressed directly on the cathodes of V_3 and V_4. The alternate raising and lowering of the cathode potentials have the effect of raising and lowering the grid bias above and below cut-off, thus throwing tubes V_3 and V_4 alternately in and out of operation. If input signal A is used to synchronize the multivibrator, input signal A appears on the oscilloscope screen every other cycle. During the alternate cycle, the other input signal B appears on the scope. The frequency of the second signal must be some multiple of the frequency of the first input signal if a stationary image is desired.

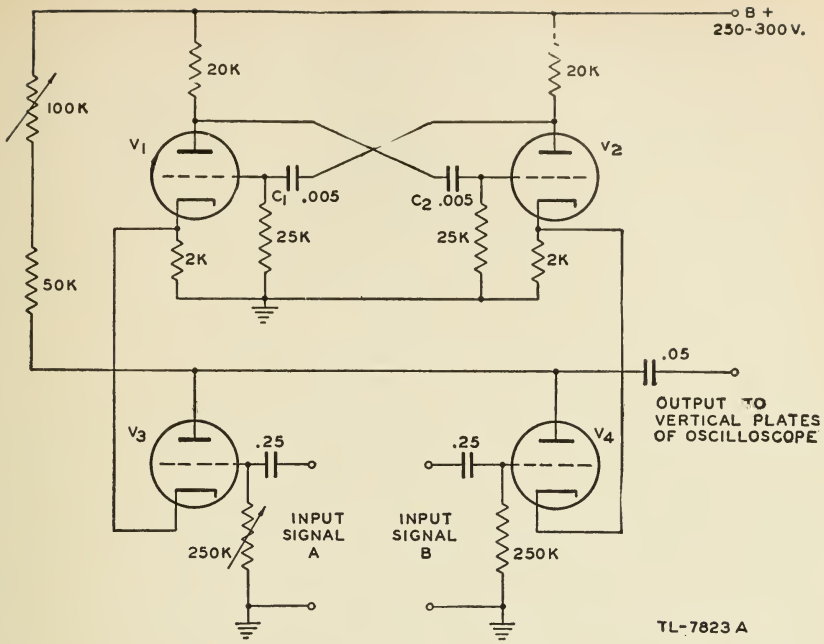

Figure 251. Multivibrator electronic switch as used with an oscilloscope.

54. COUNTING CIRCUITS. a. General. (1) A counting circuit, also known as a frequency divider, is one which receives uniform pulses, representing units to be counted, and produces a voltage proportional to their frequency. By slight modifications the counting circuit is used in conjunction with a blocking oscillator to produce a trigger pulse which is a submultiple of the frequency of the pulses applied.

(2) The pulses applied to the counting circuit must be of the same amplitude and time duration if accurate frequency division is to be made. Thus counting circuits are ordinarily preceded by shaping and limiting circuits to insure this uniformity of amplitude and width. Under these circumstances the pulse-repetition frequency constitutes the only variable, and frequency variations may be measured.

b. Positive counting. (1) Positive pulses, which may vary only in their recurrence frequency, are applied to the input of the positive counter shown in figure 252. The charge on the coupling capacitor C_1 cannot change instantaneously as the positive leading edge is applied; so the plate of V_2 becomes positive and the diode conducts. A charging current flows through R_1 during the pulse time and a small charge is developed on C_1. At the end of the pulse the drop in voltage places the diode side of the capacitor at a negative potential equal to the charge accumulated on C_1. V_2 cannot conduct, as its plate is negative with respect to its cathode. However, V_1 conducts, discharging the small charge from the capacitor, which would otherwise build up during each succeeding positive pulse, eventually rendering the circuit insensitive to the applied pulses.

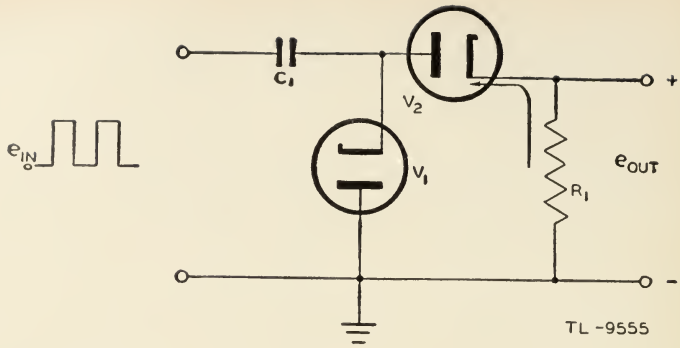

Figure 252. Positive counting circuit.

(2) It is apparent in figure 252, that since a certain amount of current flows through R_1 each time a pulse is applied, an average current flows which increases as the pulse recurrence frequency increases and decreases as this frequency decreases. The IR drop developed across R_1 can be used to control a succeeding stage as illustrated in figure 253. The filter in the grid circuit of V_3 aids in obtaining smooth operation by removing too rapid changes in voltage developed across R_1. The voltage at the grid of V_3 varies with changes in the pulse frequency and produces variations in the plate current of V_3. A milliammeter is placed in series with the plate circuit so that changes in the average plate current are indicated as a measure of variations in the recurrence frequency of the input pulses.

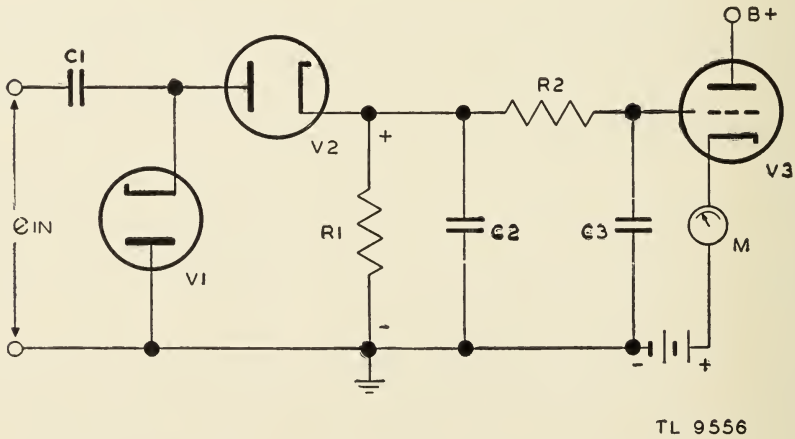

Figure 253. Circuit controlled by positive counter.

c. Negative counting. By reversing the connections to the diodes V_1 and V_2 of figure 252 the circuit is made to respond to negative pulses. A negative counter circuit is shown in figure 254. The diode V_2 conducts during the time the negative pulse is applied and an electron current flows through R_1 as indicated by the arrow. At the end of the negative pulse, V_1 conducts sufficiently to remove the small charge which de-

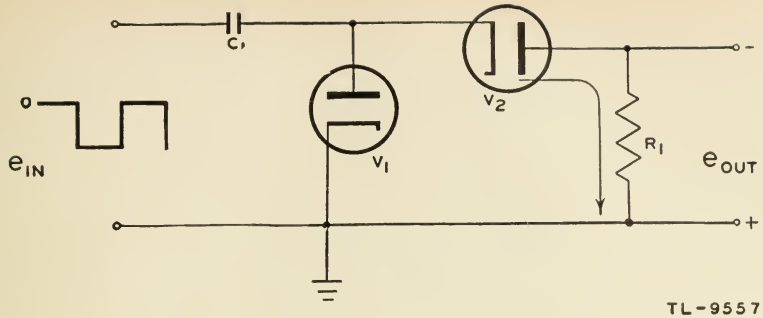

Figure 254. Negative counting circuit.

veloped on C_1 during the pulse time. The current through R_1 increases with an increase in the pulse frequency as before. However, if the voltage developed across R_1 is applied to the same control tube as shown in figure 253, the increase in current causes the grid of V_3 to become more negative. This decreases the plate current through V_3 and the meter. Thus an increase in frequency of the negative pulses causes a drop in the average plate current measured by the meter, which is opposite to the effect in the positive counter.

d. Step-by-step counting. (1) The step-by-step counting circuit is similar to those already discussed except that a capacitor which is large compared to C_1 replaces the resistor R_1 of figure 252. The charge on this capacitor, C_2 of figure 255, is increased slightly during the time of each positive pulse, producing a step voltage across the output. These steps decrease in size exponentially as the voltage across C_2 approaches the

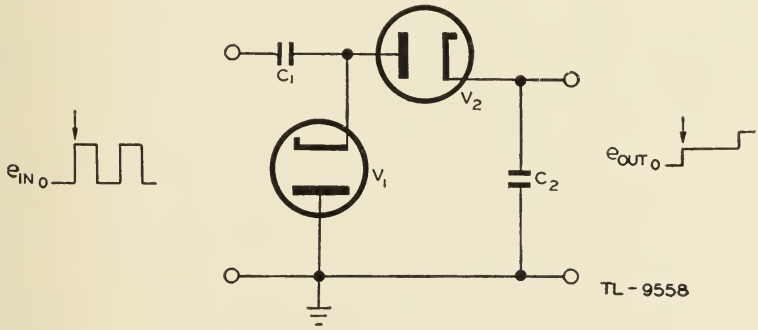

Figure 255. Step-by-step counting circuit.

final value (fig. 256), the rate being dependent upon the output impedance of the driving circuit. As long as there is no path through which C_2 can discharge, the voltage across it continues to increase with each successive pulse until it is equal to the amplitude of the applied signals. At this point the cathode of V_2 is held at a positive voltage equal to that on the plate during the pulse time and the tube fails to conduct.

(2) In order to use the step-by-step counter as a frequency divider, a sensitive circuit, such as a single-swing blocking oscillator, is connected

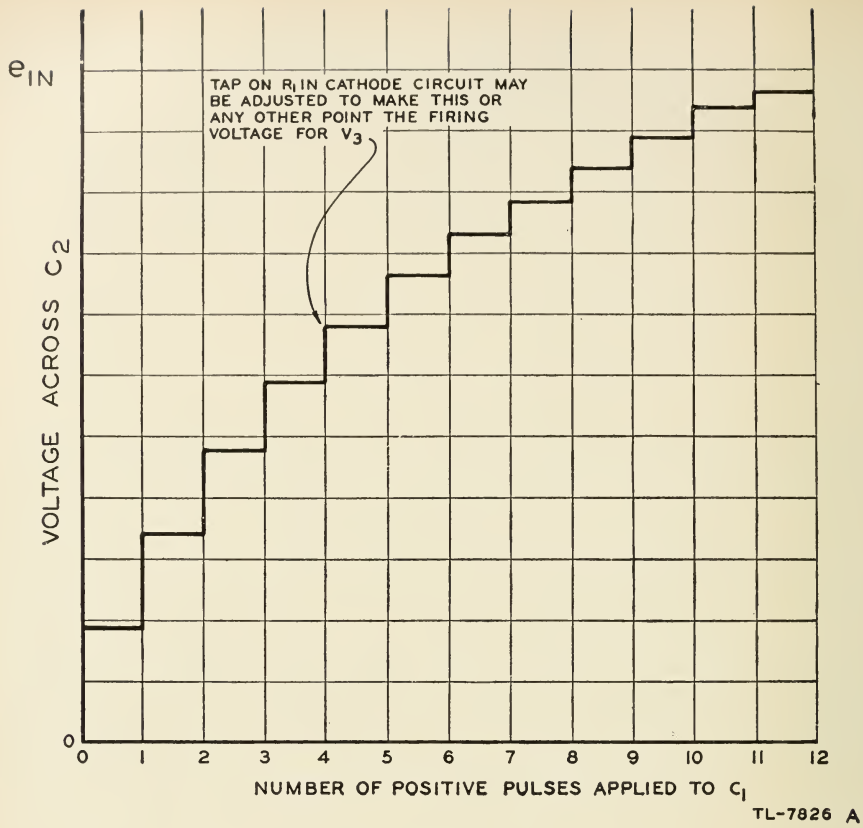

Figure 256. Step voltage developed across C_2.

to the output terminals (fig. 257). The blocking oscillator V_3 is triggered into operation when the voltage across C_2 reaches a point sufficiently

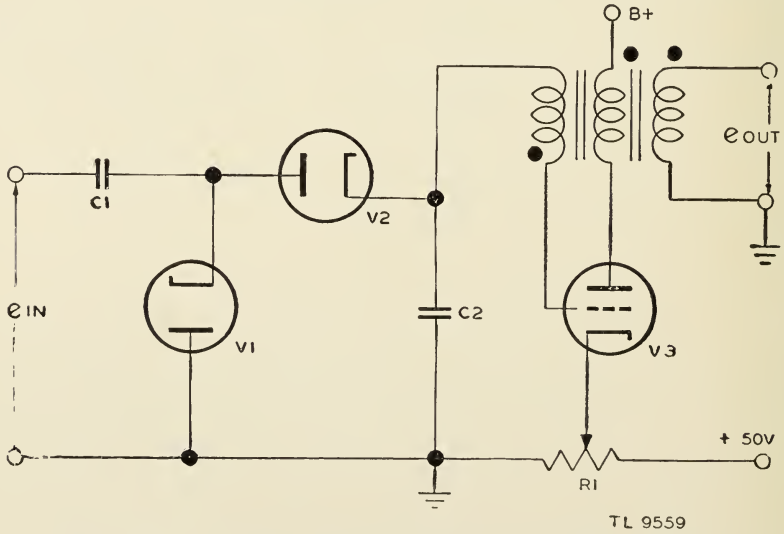

Figure 257. Blocking oscillator triggered by counter circuit.

positive to raise the grid of V_3 to cut-off. The regenerative action of the blocking oscillator is such that, once conduction starts, the grid swings positive with respect to the cathode and grid current quickly discharges capacitor C_2 back to ground potential. Any attempt for C_2 to charge to a negative voltage is prevented by the clamping action of V_2 and V_1.

(3) The windings of the blocking oscillator transformer are such that similar polarities are indicated by the dots. Thus a positive pulse, characteristic of the output of the blocking oscillator, which recurs at a submultiple of the input pulse recurrence frequency, is produced at the output terminals. The submultiple frequency is determined by the setting of the potentiometer R_1 which selects the biasing voltage placed on the cathode of V_3 and selects the point on the curve of figure 256 at which the tube starts to conduct. Thus, for example, the pulses applied to the input of the counter circuit may have a repetition frequency of 1,000 pulses per second and the blocking oscillator may be adjusted to produce pulses at one-fourth this frequency, or 250 pulses per second.

SECTION VIII

CATHODE-RAY TUBE

---

55. GENERAL. a. The cathode-ray tube is a special type of vacuum tube in which electrons emitted from a cathode are caused to move at a very high velocity, are formed into a narrow beam, and are then allowed to strike a chemically prepared screen which fluoresces, or glows, at the point where the electron beam strikes. The importance of the cathode-ray tube is that it provides a *visual* means of examining and measuring current and voltage phenomena in electrical circuits. Because the electrons are so very light in weight, the electron beam can be deflected very quickly. This property enables the cathode-ray tube to be used in measuring currents and voltages in terms of millionths of a second (called microseconds). It also permits its use at frequencies much higher than those possible with any other type of indicating or measuring device.

b. The chief use of the cathode-ray tube in radar is as a visual indicating device for the display of information obtained by radar transmitting and receiving circuits.

c. Another important use of this tube is in a test instrument known as the oscilloscope or oscillograph, which permits the examination of all types of electrical waveforms.

d. Special types of cathode-ray tubes are used for other purposes, such as fast-action switches, oscillators for the generation of high frequencies, or devices for developing complex waveforms. Television requires the use of two special cathode-ray tubes, known as the iconoscope (camera) and the kinescope (receiver-projector).

56. ELECTRON BEAM. a. General. The cathode of a cathode-ray tube emits a stream of electrons within an evacuated container. These electrons have certain properties and characteristics, discussed in *b, c, d,* and *e, below.*

b. Electron charge. Electrons are small, negatively charged particles having negligible weight or mass. The negative charge is the same for all electrons and cannot be neutralized or removed.

c. Motion of electrons in electrostatic field. (1) It is a basic law of physics that like electrostatic charges repel and unlike charges attract. Since an electron has a negative charge, it will be attracted by a positively charged plate or electrode in an electrostatic field, and will be repelled by any negatively charged electrode.

(2) An electrostatic field is most simply shown by the two plates in figure 258. The lines *a, b, c,* and *d* are called lines of force, because an electron placed in this field with no velocity will be moved along these lines by the attraction of the positive plate. The direction in which the electron will move is indicated by the arrows on the lines of force. This

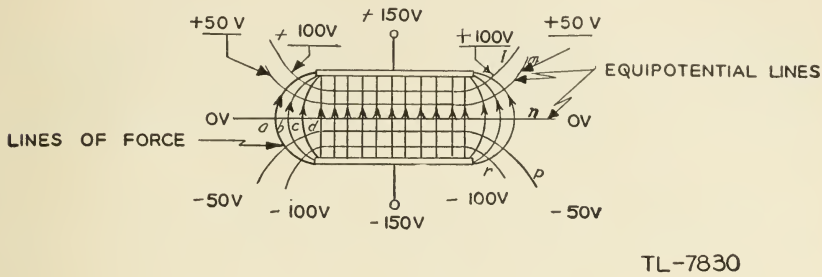

Figure 258. Electrostatic field between two parallel plates.

direction is called the direction of the electrostatic field. The lines *l, m, n, p,* and *r* are called equipotential lines because the potential from any one of these to either of the plates is the same at all points on the equipotential line. If an electron is shot into the electrostatic field, the forces acting on it at all times lie along the line of force that the electron is crossing. The only thing that will cause the electron to cross the line of force is its own momentum, since the action of the field tends to pull the electron along one line of force. If the electron passes through the field very quickly, the attraction of the positive plate and the repulsion of the negative plate may not have time to make the electron hit the positive plate,

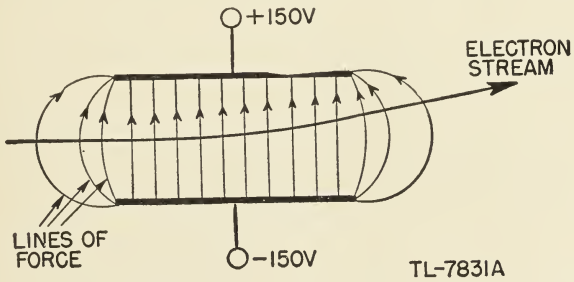

Figure 259. Deflection of electron stream by an electrostatic field.

but the electron will be moved off its initial course. That is, the electron stream will be deflected by passing through an electrostatic field, as shown in figure 259.

d. Motion in an electromagnetic field. (1) An electric current in a wire may be considered as a moving stream of electrons. A magnetic field is also associated with every current flowing in a wire.

(2) A straight wire carrying a stream of electrons placed in a uniform magnetic field has around it a field which reacts on the existing magnetic field. The two fields are shown separately in figure 260①, and the result of the interaction between them is shown in figure 260②. When the

lines of magnetic force are distorted, as in figure 260②, they exert a force which tends to make the lines straight. The wire is then made to move in the direction shown. This may be better understood if the magnetic lines are thought of as rubber bands. Those below the wire are tight and pushing hard against the wire, while those above are loose.

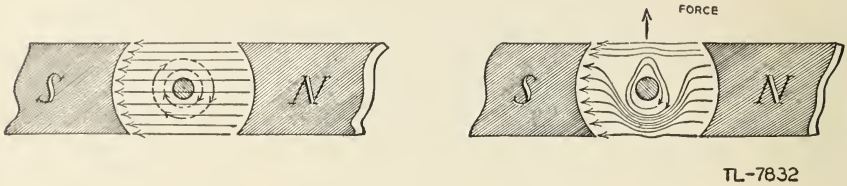

Figure 260. Action of a wire carrying current in a magnetic field. (The current shown is a stream of electrons coming out of the page.)

The tight rubber bands then will tend to contract and push the wire up in the direction of the arrow labeled "force."

(3) Since the electron stream is traveling in one direction, it has the properties of a direct current. If the beam of electrons is passed through a magnetic field, it will be acted on by a force in the same way that the wire shown in figure 260 is affected.

(4) A simple way of remembering the direction in which the beam will move in a magnetic field is by the application of the right-hand rule (fig. 261). The thumb, index finger, and middle finger are all held at right angles to each other. If the index finger points in the direction of the magnetic field (that is, if it points from the north pole toward the south pole), and the middle finger points in the direction in which the electrons in the beam are traveling, then the thumb will point in the direction of the force acting on the electron beam.

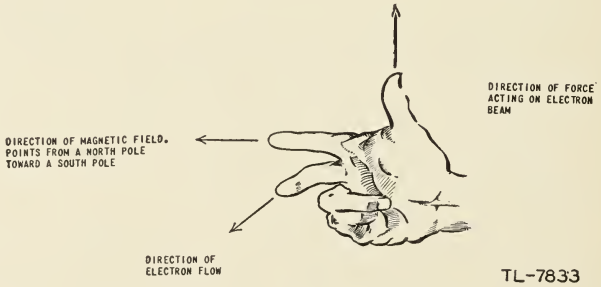

Figure 261. Right-hand rule for determining direction of force acting on an electron beam moving through a magnetic field.

e. Electron-beam energy. An electron beam consists of a large number of electrons moving with high velocity and possessing considerable kinetic energy. This energy of motion is transformed into energy of other forms when the electron beam strikes some object. If the object is coated with certain fluorescent chemicals, a small part of the energy is converted into light. It is this property which makes the cathode-ray tube so useful. Part of the kinetic energy of the electron beam is expended in knocking other electrons off the material which it strikes (called secondary emis-

sion), and in exciting X-rays from the point at which it strikes. The bulk of the energy, however, is dissipated as heat at the point of impact. Since most of the energy appears as heat, it must be remembered in working with oscilloscopes that a very bright, small spot on the screen can burn the screen if it remains too long in one position, because the temperature of the screen may be raised high enough by electron bombardment to alter the composition of its chemical coating. When very high accelerating voltages are used, enough heat may be generated to melt the glass envelope if the spot is left too long in one place.

57. FLUORESCENT SCREENS. a. General. To convert the energy of the electron beam into visible light, the area where the beam strikes is coated with a phosphor chemical which has the property of emitting light when bombarded with electrons. This property is known as fluorescence. Continued emission of light for a short time after bombardment is called *phosphorescence.*

b. Coating materials. All fluorescent materials are associated with a characteristic relationship between the intensity of the emitted light and the colors contained in that light. Willemite, which emits a green light, has been used generally for coating cathode-ray tube screens. Recently, however, other materials have been developed which emit different colors, and have varying abilities to hold the image on the screen when the electron beam has passed on. Typical phosphors or fluorescent materials used are as follows:

(1) Willemite (zinc othosilicate), for predominantly *green light.*

(2) Zinc oxide, for predominantly *blue light.*

(3) Zinc beryllium silicate, for predominantly *yellow light.*

(4) Mixture of zinc sulphide and cadmium zinc sulphide or zinc beryllium silicate, for nearly *white light.*

c. Phosphorescence or afterglow. All fluorescent materials have some afterglow, or phosphorescence, but the duration of the afterglow varies with the material, as well as with the amount of energy in the beam causing the emission of light. For oscilloscopes that are to be used for observing nonrepeating phenomena or periodic phenomena which occur at a low repetition rate, a screen material on which the image will linger is desirable. The screen of such a tube is described as having "long persistence," since the light emitted by phosphorescence fades out slowly. In applications where the image changes rapidly, afterglow is a disadvantage, since it may cause confusion on the screen. Manufacturers generally designate the persistence and the color of the screen of cathode-ray tubes.

d. Intensity of spot on screen. The intensity of the spot on the screen of a cathode-ray tube is dependent on two things. First, the intensity depends on the speed of the electrons. Second, the intensity depends, within limits, on the number of electrons that hit the screen at one point within a certain length of time. The amount of light which the phosphor is capable of emitting is limited, and, once the maximum has been reached, further increase in the electron bombardment has no effect on the light intensity. There are obviously two ways of controlling the intensity of the spot in an oscilloscope. One way is to increase the speed of the electrons when it is desired to make the spot brighter, and to decrease

this speed to make the spot less intense. Since changing the speed requires that other adjustments be made in the tube, this method is not generally used. The second way of controlling the spot intensity is to control the number of electrons in the electron beam.

58. FORMATION OF ELECTRON BEAM. a. Simple cathode-ray tube. Figure 262 illustrates a very simple form of cathode-ray tube, representing a very early step in the development of the more complex tubes of today. The electrons are emitted from the heated cathode K at right angles to its surface. The electrons proceed in a straight line under the attraction of the anode, and may reach a velocity of 10,000 miles per

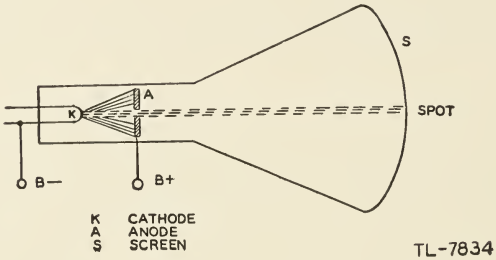

Figure 262. Simple cathode-ray tube.

second or more, depending on the force of this attraction. Some of the electrons, however, pass through the small opening in the anode and proceed without appreciable loss of velocity straight to the screen. Although the electrons carry equal negative charges, and thus tend to repel each other, the beam is scattered very little, since the electrons are traveling too swiftly for any scattering action to be effective. Most of the electrons strike the anode and therefore cause a current to flow in the external circuit.

b. Modern cathode-ray tube. (1) The directly heated cathode has been replaced in modern tubes by an indirectly heated cathode with an oxide coating which permits great emission. In order that the electrons will be emitted in the desired direction only, the cathode is made of a small cylinder of nickel with the oxide coating applied only at the end (fig.

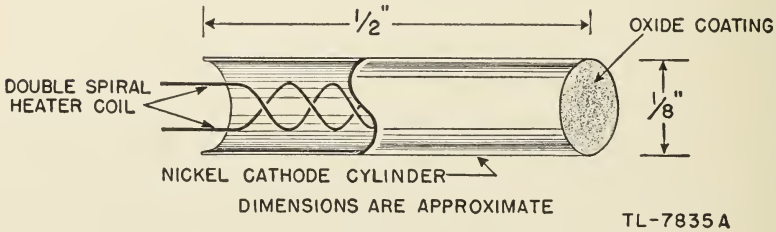

Figure 263. Cathode of modern cathode-ray tube.

263). To avoid affecting the electron beam, the tungsten wire-heater coil is wound in a double spiral so that the magnetic field of half the wind-

ing is cancelled by the equal but opposite magnetic field of the other half. The heater coil is insulated from the cathode, but the insulation touches the cathode to provide good conduction of heat.

(2) In early tubes of the type shown in figure 262 there was little control of either the number or the direction of electrons emitted from the cathode. This caused high current in the external power supply and necessitated large transformers. Modern tubes have overcome these disadvantages by improvements in the cathode and by the addition of a control grid. This grid is a metal cylinder placed around the cathode. The direction in which electrons are emitted is controlled by a disk, which covers the end of the grid cylinder and allows the electrons to pass only through a small hole in the center. Figure 264 is a sketch of the grid placed around the cathode, and shows the lines of force of the electrostatic field between these elements. If an electron is emitted in the direction of the arrow *KA*, it will be acted on by the electrostatic field. The force on the electron will be in the direction of the arrows on the

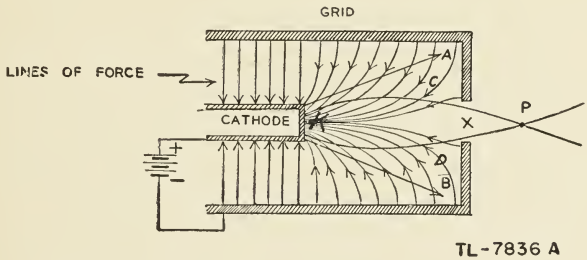

Figure 264. Action of grid in concentrating electrons into a beam.

lines of force that it crosses. The electron moving in the direction *KA* will then be curved around along the path *KCP*. In the same way, another electron emitted along *KB* will be made to follow *KDP*. It is seen that these two paths cross at the point *P*. This is true for any other electron whose path allows it to pass through the small hole in the grid at *X*. If the voltage of the grid is made more negative with respect to the cathode, fewer electrons will be able to follow paths that will permit them to go through the hole at *X*. In addition, the attraction of the anodes beyond the grid will be lessened by the increased negative voltage on the grid. This allows control of the number of electrons in the beam, and thus permits control of the brightness of the spot on the screen. The function of the grid is twofold. First, it acts in the conventional way to control the amount of emission from the cathode; second, it acts as a lens to concentrate the electrons into a small beam in the same way that a searchlight concentrates light rays into a beam.

59. CONTROL OF ELECTRON BEAM. a. Electrostatic control. The elements of a typical cathode-ray tube using electrostatic focusing and deflection are shown in figure 265. Electrons emitted by the cathode are focused and accelerated by the action of the grid and anodes. By virtue of the apertures in the various tube elements and the form of the electric field around the two anodes, the electron stream is constricted into a

narrow beam which passes between each of the two sets of deflecting plates before reaching the screen. In this tube the beam is focused and deflected by electrostatic action.

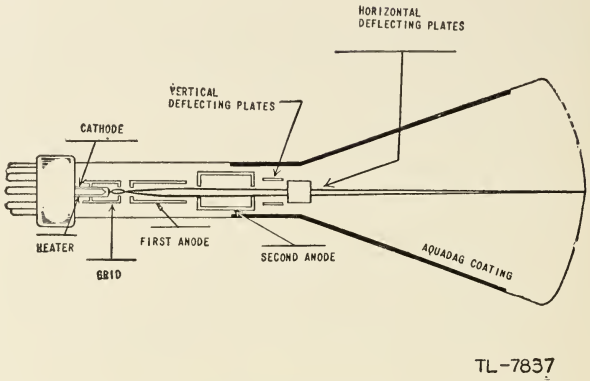

Figure 265. Typical electrostatic cathode-ray tube.

b. Electromagnetic control. (1) The electromagnetic type of cathode-ray tube has come into recent use because of the greater definition possible with magnetic focusing. Also, electromagnetic deflection has a number of advantages over electrostatic deflection, particularly when a rotating radial sweep is required to give *polar* indications.

(2) The production of an electron beam in an electromagnetic cathode-ray tube is essentially the same as in the electrostatic tube. The grid structure is similar, and the use of the grid to control the number

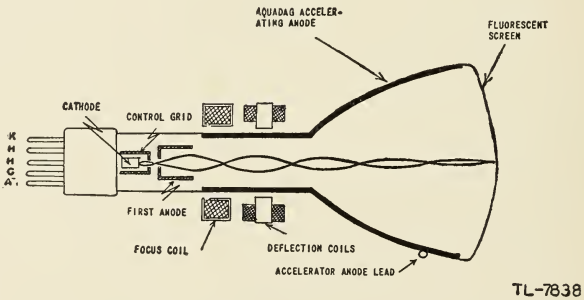

Figure 266. Electromagnetic cathode-ray tube.

of electrons in the beam is identical. The elements of a typical cathode-ray tube using electro-magnetic focusing and deflection are shown in figure 266.

(3) The focus coil of an electromagnetic tube is wound on an iron core. This core is generally constructed with a small air gap for concentrating the magnetic field. The coil may be moved along the neck of the tube to a limited extent to focus the beam, but the normal method of focusing the tube after the coil is in proper position is to vary the current flowing through the coil.

(4) There may be only one pair of deflecting coils, and in some cases these will be arranged so that they can rotate around the axis of the tube and will be at right angles to each other.

(5) Two anodes are used for accelerating the electrons from the cathode to the screen in the tube shown in figure 266. The second anode is the graphite coating, known as aquadag, on the inside of the glass envelope. The envelope is shaped differently from that of the electrostatic tube, since it is necessary to have enough space along the neck for both the focusing and deflecting coils. These coils must be mounted as close to the electron beam as possible.

c. Combined electrostatic and electromagnetic control. Cathode-ray tubes in which the focus is electrostatic and the deflection is electromagnetic are used in certain applications. Other special types are those in which the focusing or the deflection may be accomplished by a combination of electrostatic and electromagnetic action. Such special types of cathode-ray tubes are not widely used.

d. Relative advantages of electrostatic and electromagnetic control. (1) The advantages of electromagnetic tubes over electrostatic tubes are their greater structural simplicity (the electromagnetic tube has no deflecting plates or focusing anodes that must be carefully aligned); their greater ruggedness, which makes for greater reliability in mobile equipment; and their shorter tube length, which reduces the over-all size of the equipment in which the electromagnetic types are used.

(2) Electrostatic tubes, on the other hand, require little or no deflection current or power. The auxiliary circuits are therefore simpler, and difficulties from deflecting coil inductance are avoided. Most cathode-ray oscilloscopes use electrostatic tubes.

e. Additional control of beam. (1) Practically all cathode-ray tubes, of both electrostatic and electromagnetic types, are coated on the inside of the glass envelope or bulb with aquadag. The main function of this graphite coating is to attract any secondary electrons emitted by the fluorescent screen. If electrons were allowed to pile up on the screen, it would soon acquire a large negative voltage which would interfere with the normal operation of the tube. However, when the beam strikes the screen, some of the energy is used to knock off electrons. Such electrons are known as secondary electrons, and can be considered as having been emitted from the fluorescent screen. If the number of secondary electrons equals the number that originally strikes the screen, there will be no change in screen voltage. The tube will thus continue to operate properly. Another use of this graphite coating is to provide shielding for the electron beam. In some cathode-ray tubes there is no metallic accelerating anode, the aquadag coating being connected to perform this function as well.

(2) In some types of electrostatic tubes an extra anode, called an *intensifying ring*, is used to increase the brilliance of the spot on the screen. This ring is made of metal and is cemented to the inside of the glass. It accelerates the electron stream after deflection has taken place, and gives the electron stream greater kinetic energy, thus causing the screen spot to be brighter.

60. FOCUS OF ELECTRON BEAM. a. Optical analogy of the cathode-ray tube. (1) The focusing of electron beams in cathode-ray tubes is similar

in many ways to the focusing of light rays. Figure 267 shows a system of lenses which will do with light very nearly the same things that the cathode-ray tube does with an electron beam. In the light system shown,

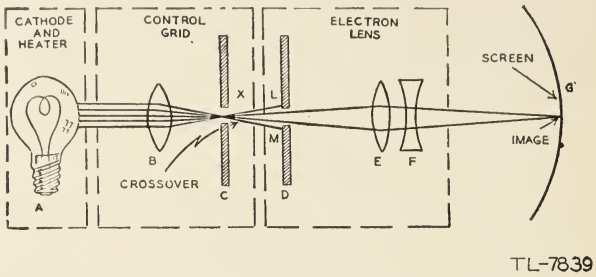

Figure 267. Light analogy to electron-beam focusing system.

a lens B is used to concentrate light from the lamp A into a small point at X. For the following lens system the light appears to come from a single point (the cross-over at X) so that by proper adjustment of lenses E and F it is possible to form an image of this small point on the screen G. The amount of light that strikes the screen can be controlled by varying the size of the hole in the disk C. If the first lens system is not perfect, some of the light will tend to scatter. To reduce the effect of the scattering, a second disk with a hole in it is placed at D so that the rays XL and XM, which could not be focused by lenses E and F, will not interfere with the image, or bright spot, on the screen.

(2) The optical system in figure 267 is labeled to show which parts correspond to the elements in a cathode-ray tube. In figure 268 is shown the electrostatic focusing system for which the optical analogy was made. Similar parts bear the same letter so that comparison between figures 267 and 268 may be more easily made. In figure 267 the block labeled "control grid" contains both a condensing lens B and a diaphrgam C. The diaphragm in figure 267 is similar to that of the shutter on a camera. Since the size of the hole in the shutter may be varied, the amount of light that reaches the film in a camera may be controlled. In the system shown, the size of the hole in diaphragm C will control the brightness of the spot on the screen G. In the cathode-ray tube the physical size of the hole in the disk that covers the end of the grid cylinder is fixed, but it is effectively variable under the control of the bias applied to the grid. Since the condensing lens B cannot be shown as any definite part of the cathode-ray tube, the area between cathode and grid is indicated as the lens B. The action of this electrical lens has already been discussed in (1) above.

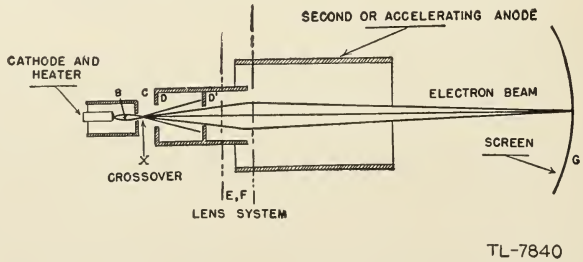

Figure 268. Electrostatic cathode-ray tube focusing elements.

(3) The lens system E and F of the optical analogy cannot be represented by any single part of the cathode-ray tube. It is indicated on figure 268 as the area between the two anodes. In the optical system the image on the screen may be focused to maximum sharpness by moving the lens E along the axis of the system. Since this is very awkward to manage in a cathode-ray tube, the electrostatic field, which acts as a lens, is changed by varying the voltage applied to the first anode, thus accomplishing the same result with the electron beam.

b. Electrostatic focusing. (1) Although the grid helps to narrow the electron beam, it is not capable of sufficient focusing action. While the grid can focus the electrons to a point close to the grid, the electron beam diverges again beyond the cross-over point. For this reason additional focusing is needed. It is obtained by the use of the two cylindrical anodes, shown in figure 268.

(2) In figure 269, the lines of force between the two anodes are shown. The second anode is always positive with respect to the first, and both anodes are positive with respect to the cathode in order to attract the electrons away from the oxide coating. An electron introduced into this field would tend to follow along one of these lines of force until it hit the more positive cylinder. If the electron that comes into this field is moving at a high velocity, it will probably not be pulled all the way to either cylinder, since it is not in the field long enough to be pulled off its course that far. However, the moving electron will be subjected to forces as it moves through the field. For instance, if an electron comes from the cross-over point X along the line XAB, it will cross the line of force a and will be pushed toward the axis. Later it will cross lines b, c, and d, each of which will push it still farther toward

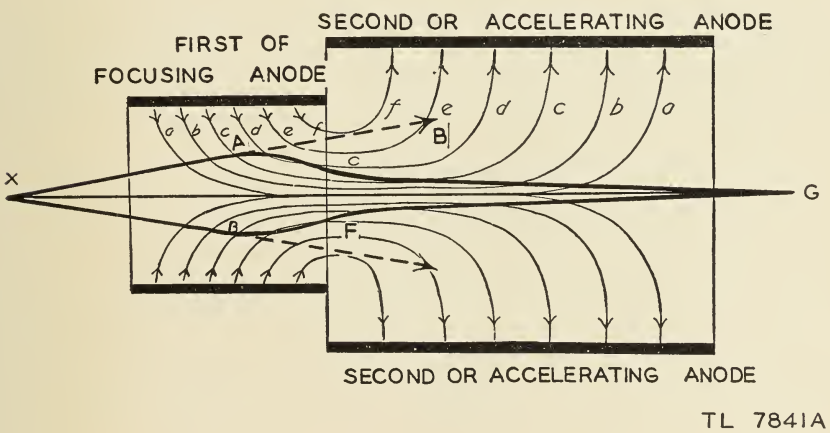

Figure 269. Electrostatic field between first and second anodes of a cathode-ray tube.

the axis of the cylinder. The path of the electron under the action of these forces will be along the curved line AC. Since the electron is now near the axis of the tube, where the lines of force are parallel to the axis, it will not be forced closer to the axis but will be accelerated by the lines of force c and d, along which it is traveling. Because the elec-

tron by now is moving very rapidly, and because the electrostatic field at the right end of the second anode (fig. 269) is relatively weak, the electron is pulled off its course only a little by the attraction along lines *b* and *a* as it leaves the anode. If the system is properly designed, any electron which can pass through the holes in the diaphragm of the first anode will experience similar forces. The forces tending to push the electron toward the axis of the cylinders are greater for electrons far off the axis than they are for those on the axis; thus all the electrons are made to converge at a point, *G*, on the screen.

(3) All the electrons in the cathode ray carry an equal negative charge. Therefore, all the electrons in the beam tend to push away or repel all the other electrons. This repulsion tends to scatter the electron beam, but the electrons are moving so fast that the effect of this force is negligible in defocusing the electron beam.

(4) The focus of an electrostatic cathode-ray is generally controlled by the voltage of the first anode. This varies the amount of the force that the electrostatic field exerts on the electrons, so that by observing the screen it is very easy to bring the beam to a bright, sharp spot.

c. Electromagnetic focusing. (1) In the electromagnetic cathode-ray tube two anodes are used. They do not perform any of the focusing action, however, and are used only to attract electrons from the cathode and to accelerate them toward the screen. Since the structure and function of the grid is the same as in the electrostatic tube, the object whose image is to be focused on the fluorescent screen is the cross-over point.

(2) Figure 270 shows the magnetic field set up inside the neck of the cathode-ray tube in order to focus the beam. The focus coil may be wound inside a soft iron ring in which is cut an annular groove (fig. 270), or it may be wound without any iron near it. The presence of the iron makes it possible to set up the necessary field strength in the tube with less current, and allows the field to be applied only where useful. Consequently, there is very little interference with the deflection mechanism. The air gap is necessary in order that the magnetic field

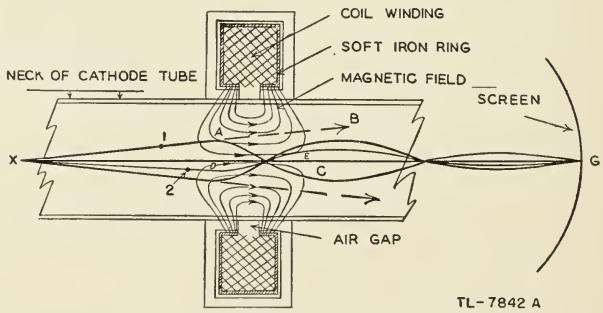

Figure 270. Magnetic field set up in a cathode-ray tube by a short electromagnetic focus coil.

may be set up within the cathode-ray tube. If the iron were solid, it would shield the tube from field completely. A direct current is passed through the coil to create the desired field. In general, some means is provided by which the focus coil may be moved along the axis of the tube to allow rough focusing. This adjustment need be made only once,

since the amount of current flowing in the coil may be controlled to provide fine focusing.

(3) An electron coming from the cross-over along the line *XAB* will encounter the magnetic field. Since this electron is moving diagonally through the magnetic field, it is possible to break its motion into two parts, or components. One component of the velocity of the electron is parallel to the axis and parallel to the magnetic field. The other component is at right angles to the first and tends to pull the electron directly across the field. This second component of the electron's velocity causes a reaction similar to that discussed in *b*(4) above. Since the electron which tends to move across the field is in effect a current flowing in that direction, the reaction of the magnetic field causes the electron to move in accordance with the right-hand rule. In the case of the electron that started into the field along *XAB*, the motion of the electron of interest at this point is vertically upward. As indicated, the direction of the field is from left to right. The electron will then tend to come out of the page. Since the electron is still in a magnetic field, it is continually deflected, and will describe a circular path around the axis as it passes through the magnetic field. The result of the magnetic field on the motion of the electron, therefore, is to make the electron describe

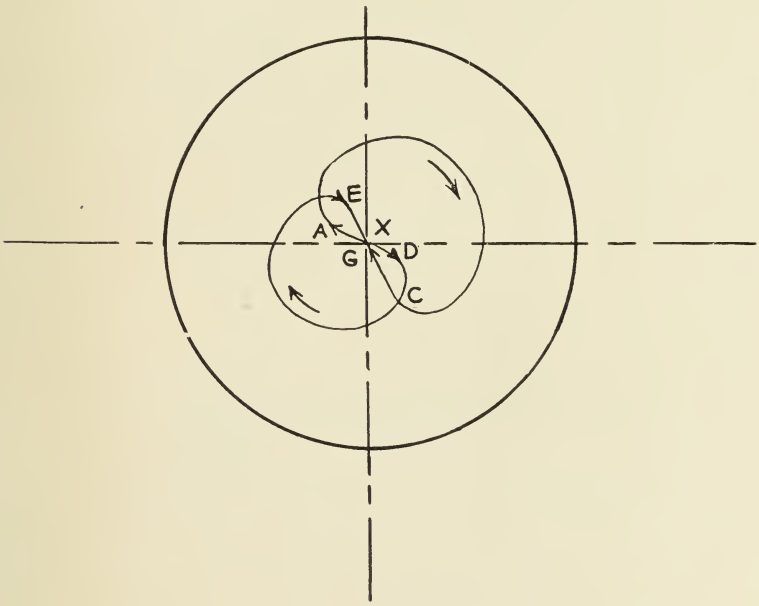

TL 7843 A

Figure 271. Rotational movement of an electron focused electromagnetically.

a helical path (like the thread on a wood screw) while passing through the magnetic field. All the electrons which are shot into the field are made to follow a spiral path. The size of this path is such that electrons which are far off the axis are made to follow a path that will make them meet with electrons that came into the field almost parallel

with the axis. If it were possible to watch the electrons as they come toward the screen, it would be seen that they follow paths such as those shown in figure 271. Electron 1 (fig. 270) enters the magnetic field at A; from X to A its motion was along a straight line. The spiral path while the electron is in the magnetic path appears as a circular arc in figure 271. Thus, from A to C, the path is approximately circular. At C the electron leaves the magnetic field and proceeds along a straight line which is aimed at the spot G on the screen. Another electron, 2 (fig. 270), comes in at a small angle with the axis. However, it takes just as long for this electron to go from D to E as it took the first electron to pass through the field. All electrons are heading directly toward the axis when they leave the field. If they all start from the cross-over point with the same velocity and at the same time, and if they all require the same length of time to pass through the magnetic field, they will meet at a common point. If the strength of the magnetic field is adjusted so that this common point is at the fluorescent screen of the tube, the beam will be properly focused.

61. DEFLECTION OF ELECTRON BEAM. a. Electrostatic. (1) In paragraph 56*c* it was pointed out that an electron beam could be deflected by an electrostatic field. Since the electrons are negatively charged, they are attracted toward the positive plate. The amount that an electron is deflected, or pulled off its normal straight course, is dependent on the speed at which the electron is traveling and the voltage applied to the deflecting plates. Since a slow-moving electron is in the field for a relatively long time, the attractive force of the electrostatic field has a relatively long time to act, and can pull the electron further toward the positive plate than when the electron is in the field for only a short time. For an electron passing through the field with a constant velocity, the deflection will be large when the voltage on the deflecting plates is large, since the larger voltage will attract the electron with greater force.

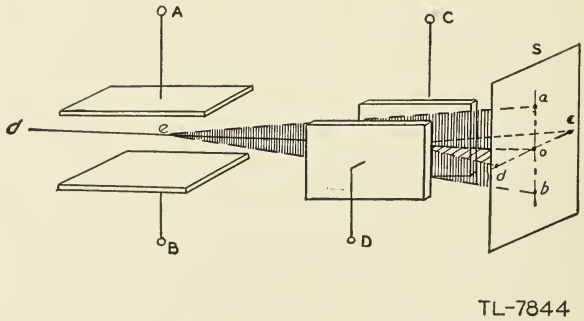

Figure 272. Deflecting plates for electrostatic cathode-ray tube.

(2) In an electrostatic cathode-ray tube, a second pair of deflecting plates is mounted at right angles with the first pair. Generally, the plates of the first pair cause deflection in the vertical direction, and are therefore called the vertical deflecting plates; the plates of the second pair cause deflection in the horizontal direction, and are therefore called horizontal deflecting plates. In figure 272 these deflecting plates are shown schematically. If plate A is E volts more positive than plate B, the elec-

tron beam will be pulled upward. Instead of striking at *o* on the screen *S*, the beam will strike at *a*. For a given value of accelerating anode potential the speed will be fixed, so that the distance, *oa*, that the spot moves on the screen will depend on the magnitude of the voltage *E*. If *E* is large, then the deflection *oa* will be large. If plate *B* were made more positive than plate *A* by *E* volts, the beam would strike the screen at *b*. If both plates were at the same voltage, the beam would strike at *o*.

(3) The second pair of deflecting plates, *C* and *D*, are placed between the first pair and the screen. They cause a deflection at right angles to the deflection of the first pair of plates. When plate *C* is *E* volts more positive than plate *D*, the beam will strike at *C*, if plates *A* and *B* are at the same voltage. If the voltage between *C* and *D* is reversed, so that *D* is *E* volts more positive than *C*, the beam will strike at *d*. In this pair of plates the movement of the spot is likewise dependent on the magnitude of the voltage *E*.

(4) The deflection could be made even larger by increasing the distance *eo* from the vertical deflecting plates to the screen. This may be seen more clearly in figure 273. The point *e* corresponds to the vertical deflecting plates in figure 272. A sufficient voltage is impressed on the plates to cause the beam to leave the deflecting plates along *ea* instead of along *eo*. If the screen is separated from the deflecting plates by a distance, *eo*, the movement on the screen will be *oa*. If, however, *eo* is doubled, as *eo′*, the deflection on the screen will be doubled, *o′a′*, although the beam is still deflected from its course by the same angle *O*. For any given cathode-ray tube, both the velocity of the electrons and

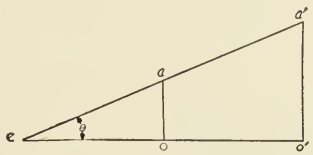

TL-7845

Figure 273. Illustration of how deflection sensitivity depends on distance of screen from deflecting plates.

the spacings of the elements within the tube are fixed. Therefore, the movement of the spot on the screen will depend only on the voltage applied to the deflecting plates. The amount that the beam will be moved by a difference of voltage of one volt across the deflecting plates is called the deflection sensitivity. This is given by the manufacturer as one of the tube characteristics in units of millimeters per volt direct current. It can be seen from the characteristics given in the handbooks that the deflection sensitivity of the vertical deflecting plates is somewhat greater than that of the horizontal deflecting plates, since the vertical deflecting plates are farther from the screen.

(5) The deflecting plates shown in figure 272 are merely parallel plates. If it is desired to increase the deflection sensitivity, the plates may be made longer, so that the electrons will be in the electrostatic field for a longer time. When this is done, however, the plates are generally parallel for a part of their length and divergent for the remainder

(fig. 274). This divergence is necessary so that the electron beam will not strike the deflecting plates at maximum deflection.

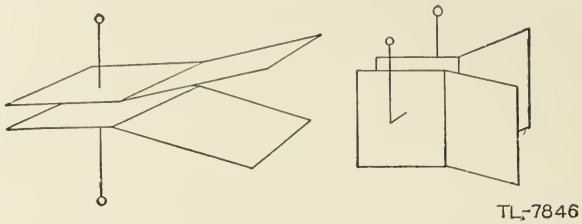

Figure 274. Divergent deflecting plates.

b. Electromagnetic. (1) The action of swiftly moving electrons in a magnetic field has already been discussed. It is known that the magnetic field will deflect an electron beam in a direction which is at right angles to both the direction of the field and the direction of motion.

(2) If deflection in only one direction is desired, coils may be wound on an iron core (fig. 275). The two coils are in series and are wound in such directions that the field produced by one coil opposes that of the other. The magnetic lines of force then must pass through the air in order to complete the magnetic circuit, since it is impossible to com-

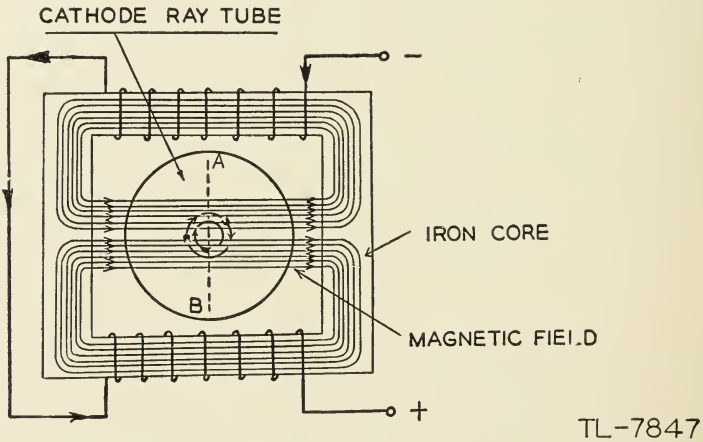

Figure 275. Magnetic field for deflection of electron beam in one direction only.

plete the path through the iron. The direction of motion of the electron beam is out from the page. For the direction of the magnetic field shown, therefore, the beam will be deflected downward. If the field strength is increased, a greater force will be exerted on the beam and it will be deflected farther downward. If the current through the coils is reversed, the beam will be deflected upward. All motion will take place along the line *AB*.

(3) In the electromagnetic cathode-ray tube, the deflection sensitivity is given in millimeters per ampere, since the magnetic field strength is dependent on the current flowing through the coil. The deflection sensitivity can be increased by keeping the current constant and putting

more turns on the coil; but since this also increases the inductance of the coil, it may be very undesirable when high-frequency signals are to be observed. Another factor which limits the inductance that may be used in deflecting coils is the self-induced voltage which is produced by a sudden change of current. If this voltage is too large, it will break down the insulation of the coils.

(4) It is possible to rotate the whole yoke around the tube so that deflection can be caused along any diameter of the face of the scope. This is generally done with the type of deflecting apparatus shown in figure 275.

(5) Another arrangement of deflecting coils for an electromagnetic cathode-ray tube is shown in figure 276. In this case, the coils are not rotated around the tube. There are two pairs of coils, one pair for horizontal and the other pair for vertical deflection. Thus the spot may be moved to any point on the screen by application of the proper currents

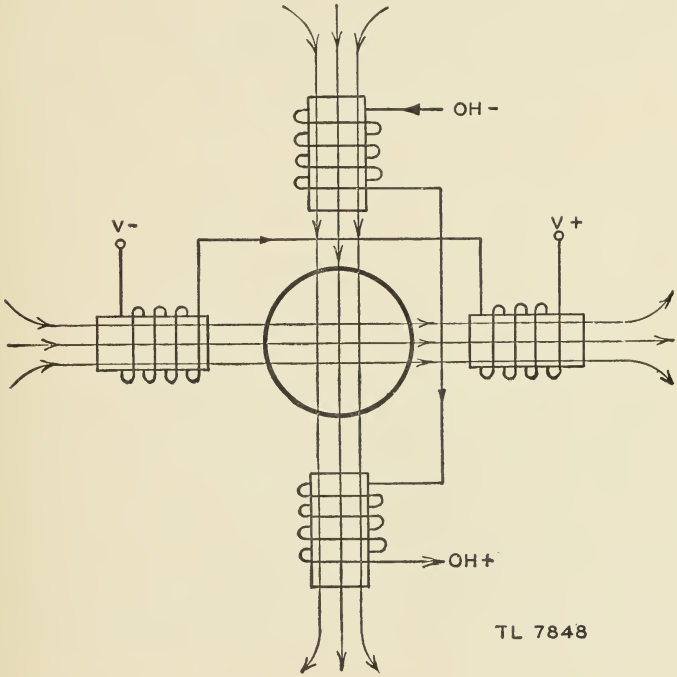

Figure 276. Two pairs of coils arranged for electromagnetic deflection in two directions.

to these coils. In this case, it is especially necessary to have good magnetic shielding between the focus coil and the deflecting coils.

c. Production of trace on screen. The human eye retains an image for about 1/16 second after viewing. An application of this characteristic of the human eye is the motion picture, where the illusion of motion is created by a series of still pictures flashed on the screen so rapidly that the eye cannot follow them as separate pictures. In a cathode-ray tube, the spot can be moved so quickly that a series of adjacent spots can be made to appear as a line, if the beam is swept over the same path

fast enough. As long as the electron beam strikes in a given place at least 16 times a second, the spot will appear to the human eye as a source of continuous light with very little flicker.

d. Resultant motion of electron beam. (1) It has been shown that a voltage applied to the vertical deflecting plates of an electrostatic cathode-ray tube will deflect the electron beam, and therefore will deflect the spot on the screen, in a vertical direction. If a sine-wave voltage is applied to the horizontal deflecting plates, the electron beam will be swept back and forth across the tube screen, causing a bright horizontal line to show on the screen. In each instance, the amount of the deflection on the screen is proportional to the voltage applied to the deflecting plates.

(2) Most of the important applications of the electrostatic cathode-ray tube require that a voltage of some sort be applied to both pairs of deflecting plates at the same time. The electron beam is continually acted upon by two forces which are at right angles to each other.

(3) To understand the effect of two forces acting at right angles, it may be well to study figure 277. Point O is assumed to be the posi-

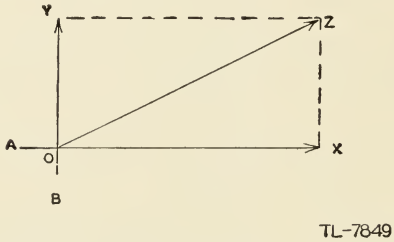

Figure 277. Resultant motion of two forces.

tion of a soccer ball on a field. If the ball is kicked by a player A, it will roll along the direction OX and will stop at X. If the ball is kicked by player B, it will roll along OY and will stop at Y. When both players kick the ball at the same time, it will move, but it is difficult to tell the direction or distance it will travel. If the two simultaneous forces are taken one by one, the problem is greatly simplified. That is, let player A kick first and move the ball to point X; now, if player B kicks the ball from X, it will move from X a distance equal to OY, or to point Z. Actually, if both players kicked the ball at the same time, it would move along OZ and stop at Z. Line OZ is called the resultant, or the vector sum of OX and OY.

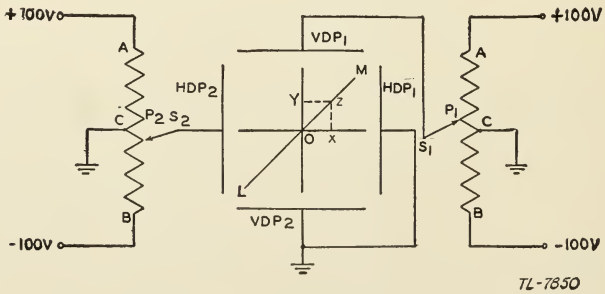

Figure 278. Resultant motion in an oscilloscope.

(4) The same case exists in the electrostatic cathode-ray tube shown in figure 278. When the sliders S_1 and S_2 of the potentiometers P_1 and P_2 are at point C, all four deflecting plates are at ground potential, and the spot will appear at O on the screen. If the slider on P_2 is pushed downward HDP_2 becomes negative with respect to HDP_1, and the electron beam is repelled by the negative voltage on HDP_2. The spot will move to some point X on the screen under the action of this repulsion. If the slider on P_1 is moved up by an amount equal to the amount that P_2 is moved down, then VDP_1 will be positive with respect to VDP_2 and the beam will be attracted from X to some point Z.

(5) If both sliders are readjusted to point C and then locked so that when S_1 goes up, S_2 will go down, the two forces OX and OY will be applied simultaneously, and the spot will move along the resultant, OZ, in the manner of the soccer ball. It is apparent that the spot will always move along the resultant when two voltages are applied simultaneously.

(6) If the control is turned in the other direction, the spot will be moved along the line OL, the line of the resultant. It may then be said that if two voltages are applied simultaneously to the horizontal and vertical deflecting plates, the position of the spot at any instant is due to the resultant force of the two voltages at that instant.

SECTION IX

CATHODE-RAY OSCILLOSCOPE CIRCUITS

62. GENERAL. a. Types. Oscilloscopes are divided into two general types —electrostatic and electromagnetic—depending on the method of deflection used in the cathode-ray tube. Practically all oscilloscopes used as test instruments are of the electrostatic type, which is also used in many radar sets. The electromagnetic-type oscilloscope is used in television, and as the indicator in certain radar sets. The following discussion of the components and operation of an oscilloscope is based on the electrostatic type, the block diagram of which is shown in figure 279.

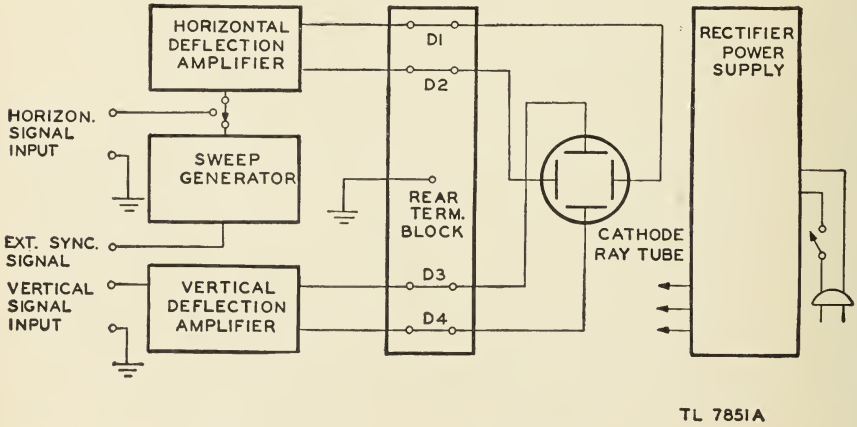

Figure 279. Block diagram of cathode-ray oscilloscope.

b. Observation of voltage waveform. One of the most general uses of the cathode-ray oscilloscope is the observation of the shape of voltage waveforms in electrical circuits. For this purpose a graph of the waveform is made, with the voltage plotted vertically and time plotted horizontally. A simple example of such a graph is shown in figure 280. Since this is the conventional way in which voltages and currents are visualized and used for calculation, the oscilloscope must present its information in this form if it is to be of value. To do so, a voltage must be impressed on the horizontal deflecting plates which will move the electron beam from left to right at a constant rate of speed to form a time scale exactly

like the line OX in figure 280. Since the electron stream strikes the screen at only one point at any instant, it is possible to form a line only by producing in rapid succession many spots of light which are close together. The human eye retains any image for approximately $1/16$ second, so that a motion which is fast appears as a blur because successive images overlap. If the horizontal deflection voltage causes the spot to retrace its path more than 16 times per second, the image will be a line which appears stationary on the screen. The voltage that causes this

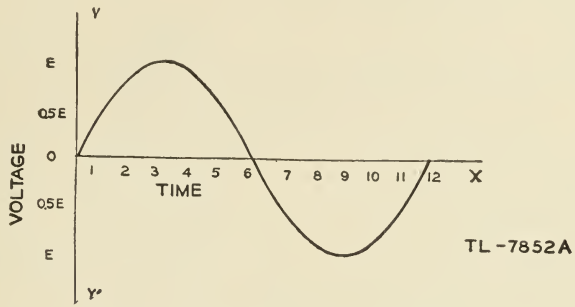

Figure 280. Graph of sine-wave voltage variation plotted against time.

horizontal deflection is called a *sweep voltage* because it sweeps the spot across the screen. The line that the moving spot generates is called the time base, since it is a line whose length represents a definite period of time.

c. Horizontal deflection. The circuit which produces the sweep voltage is represented in figure 279 by the block labeled "Sweep Generator." The voltage output from this circuit is of small amplitude. To make this small voltage large enough to deflect the beam across the full screen of the cathode-ray tube, it must be amplified. However, if the time is to be truly linear—that is, if any section of the time base is to represent exactly the same length of time as any other equal section—great care must be taken with the amplifier to insure that it will not distort the output of the sweep generator. The *horizontal deflection amplifier* (fig. 279) is used to increase the amplitude of the sweep voltage. For some uses of the oscilloscope, it may be desirable to apply some other signal to the horizontal deflecting plates. A switch is provided, therefore, so that the desired signal may be amplified by the same amplifier and applied to the deflecting plates.

d. Vertical deflection. (1) The signal to be observed by the oscilloscope is applied to the vertical deflecting plates. These plates deflect the beam up or down while the sweep voltage moves it from left to right. The vertical deflecting plates thus produce a voltage scale exactly like YOY' in figure 280. The position of the spot on the screen at any instant is controlled by the resultant of two forces (the sweep voltage and the signal voltage) acting upon it at that instant. If a sine-wave voltage is applied to the vertical deflecting plates and a sweep voltage of exactly the same frequency is applied to the horizontal deflecting plates, the spot will trace a continuous sine wave and the screen of the cathode-ray tube will display a picture exactly like figure 280.

(2) As was shown in section III, many of the signals that must be

observed contain several frequencies. In order that these frequency components may all be amplified equally, a very wide band, or video amplifier, must be used. The *vertical deflection amplifier* (fig. 279) must be a good video amplifier if the oscilloscope is to record the waveforms faithfully.

(3) The oscilloscope shown in figure 279 has provision for applying voltages directly to the deflecting plates. The connections on the rear

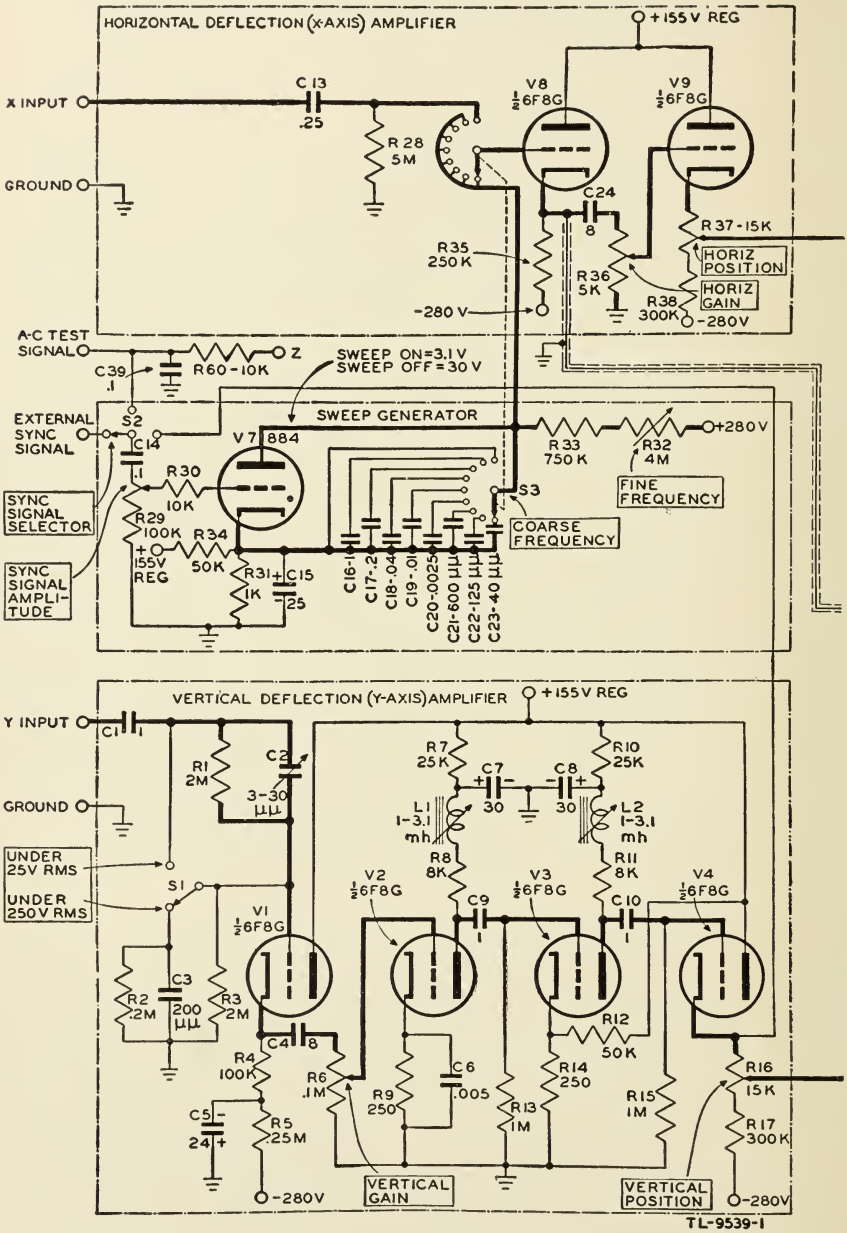

Figure 281. DuMont type 208 electrostatic cathode-ray oscilloscope.

terminal block may be removed and the signals applied directly to the deflecting plates without going through any amplification. Where the amplitude of the signal is sufficient, this is desirable for very accurate work, and in the investigation of envelopes of *r-f* wave trains when the radio frequency is too high to permit use of the amplifiers.

e. Complete oscilloscope circuit. (1) High voltage is required for the accelerating anode of a cathode-ray tube, but since very little current is

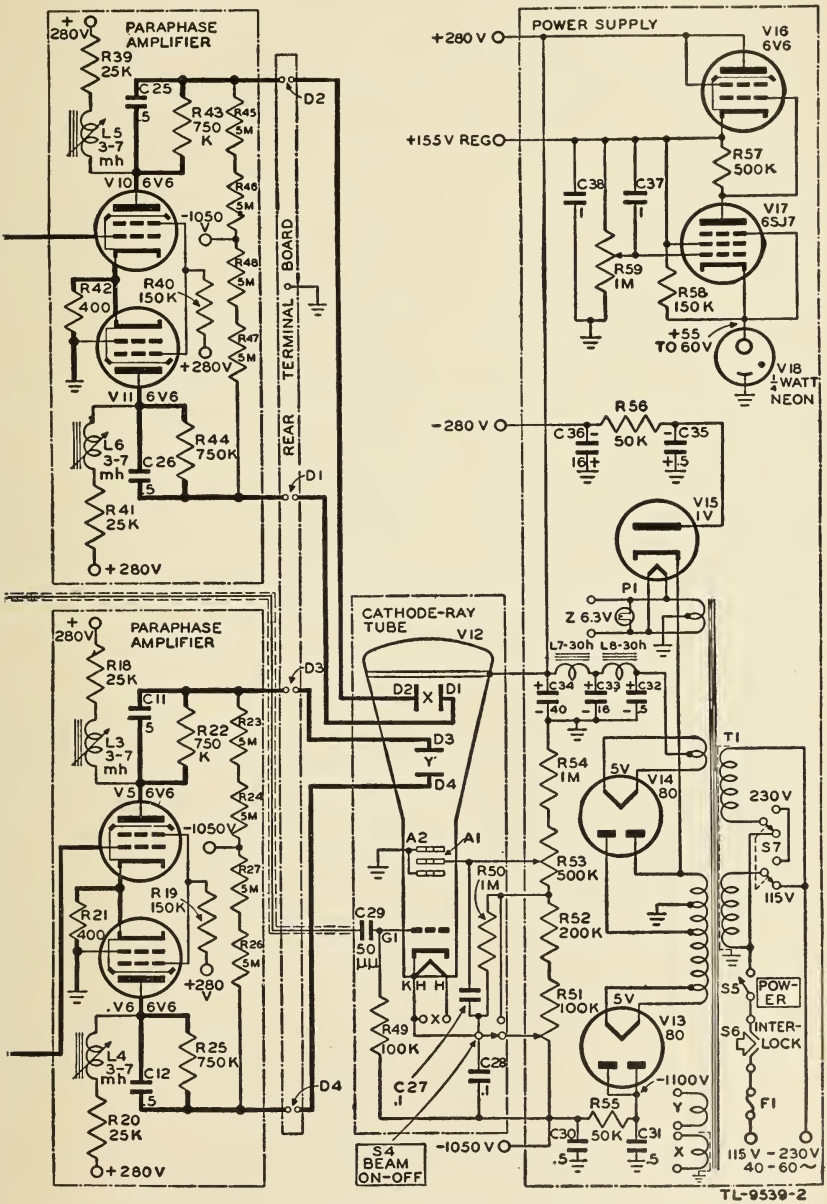

Figure 281. DuMont type 208 electrostatic cathode-ray oscilloscope.

drawn by this anode, a simple power supply can be used. In most oscilloscopes the accelerating anode is connected to ground and the cathode is made very negative with respect to ground. This is done in order that the centering control potentiometers and the connections to the deflecting plates will not have to be insulated for high voltages.

(2) The complete circuit diagram of the DuMont type 208 cathode-ray oscilloscope is shown in figure 281. This oscilloscope will be used as a specific example of the several circuits involved in oscilloscopes generally. These circuits will be discussed below under their proper headings.

63. TIME-BASE OR SWEEP CIRCUITS. a. General. (1) An oscilloscope which is used to observe the shapes of voltage waveforms must have a time base provided, generally in the horizontal direction. The sweep voltage that will produce uniform motion of the spot across the screen is called a sawtooth voltage, because the shape of the voltage waveform resembles the cutting edge of a saw. A sawtooth voltage wave is shown in figure 282①. The voltage is made to rise from point A along a straight line to point B. This is known as a linear rise. If this voltage is applied to the horizontal deflecting plates of a cathode-ray tube, the spot will move across the screen to form the time base. The time base will be linear with time if a rise of ΔE volts take place in Δt seconds anywhere along AB, since that will mean that the spot moves from S_1 to S_2 (fig. 282②) in exactly the same time that it moves from S_3 to S_4. Thus, the sweep is a means of measuring time, since it always takes t_1 seconds to go from A to S_1, or t_4 seconds to go from A to S_4.

(2) It is desirable that the time base start at the left of the tube, since that is the more usual method of plotting waveforms. The beam is swept from left to right to produce the pattern, and must be returned quickly to the starting point to retrace the pattern. The beam can be returned quickly only if the voltage falls from B to A' (fig. 282) very rapidly. In practice, time T_2 is very small compared to the length of the time base T_1.

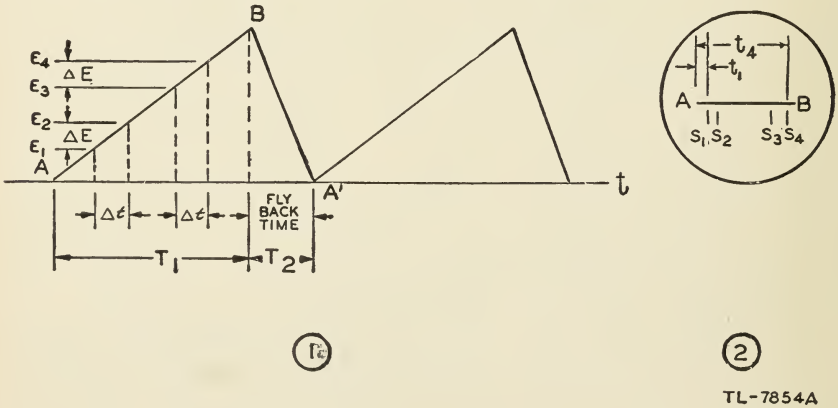

Figure 282. Sawtooth voltage waveform.

The time T_2 *is called the fly-back time,* since it represents the time during which the beam is being moved back to the starting point. Because the fly-back time is so very short, the electron beam is swept over the screen too fast to cause emission of much light, and the return trace is accord-

ingly very dim. The fly-back time is greatly distorted in figure 282①. If the picture were drawn to scale, the time T_2 would appear to be almost zero, and the line BA' almost vertical.

(3) The fly-back time is practically constant for any sweep frequency.

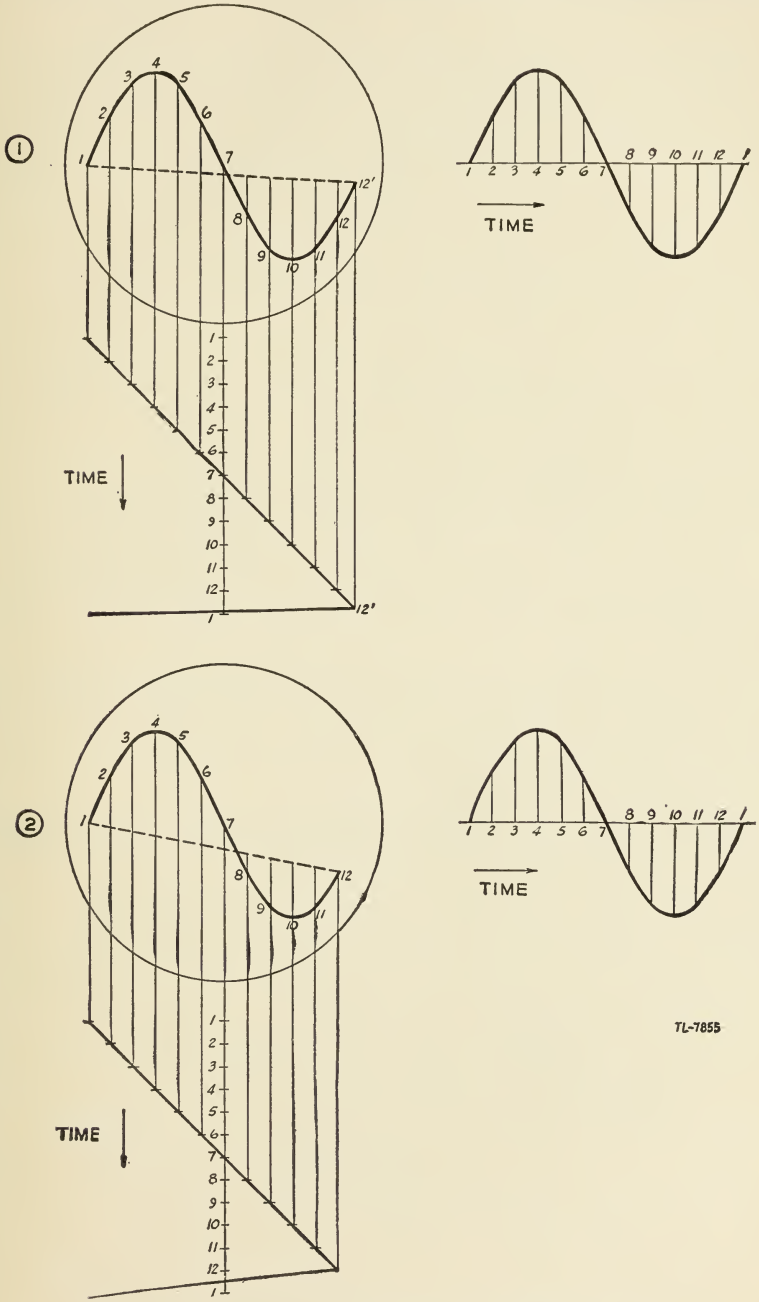

Figure 283. Distortion of pattern at high sweep frequency.

As the frequency of the sweep is increased, the fly-back time becomes a larger fraction of the sweep period. This can be shown more clearly by figure 283, in which the fly-back time has been assumed to be 10 microseconds. In ①, the period of the 1,333-cycles-per-second sine wave is 600 microseconds, and the frequency of the sawtooth sweep wave has been adjusted to exactly this value. The fly-back time is 10/600, or 1.6 percent of the period of the sine wave, so that 1.6 percent of the sine wave will be distorted, as indicated by the broken line 12′-1. If the frequency of both the sweep and the applied signal is multiplied by 5, the period of 1 cycle will be 150 microseconds. Since the fly-back time is still 10 microseconds, it represents for this higher frequency 10/150, or 6.6 percent of one cycle. In the second case, 6.6 percent of the sine wave is distorted, as indicated by the broken line 12′-1 in ②. It can be seen, therefore, that as the frequency of the signal is increased the pattern becomes badly distorted. To avoid this distortion, the frequency of the sweep is made a submultiple of the signal frequency, so that several cycles of the signal appear on the screen. Only one cycle is then distorted by the fly-back, and the others are accurately reproduced. In using an oscilloscope to observe waveforms, especially if the frequency of the waveform is 5,000 cycles per second or greater, at least three complete cycles of the signal should be made to appear on the screen.

b. Simple sawtooth generators. (1) The simplest form of sawtooth generator is the neon sawtooth type (par. 47*b*). If the sawtooth voltage is to be used as a time base, the voltage rise must be a straight line. The charging curve of the capacitor is not actually straight, but if the portion used represents a very small fraction of the supply voltage, the sawtooth waveform can be amplified and used with reasonable accuracy for many purposes.

(2) Another simple sawtooth generator is the thyratron sawtooth generator (par. 47*c*). One advantage of the thyratron over the neon bulb is that a more linear sweep can be obtained with the thyratron by adjusting the ionizing potential to use the straightest portion of the capacitor charging curve.

c. Application of thyratron sawtooth generator. (1) Figure 284 shows the sweep generator circuit of the DuMont type 208 oscilloscope. In this

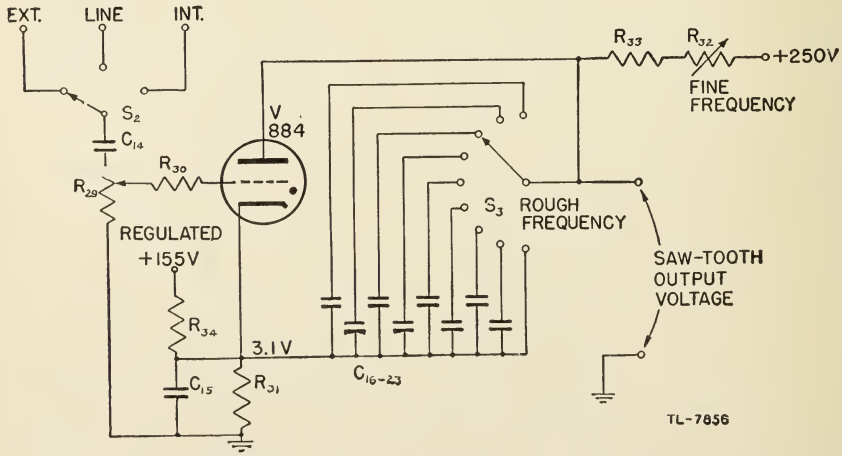

Figure 284. Thyratron sawtooth sweep generator.

circuit, a fixed bias of $+3.1$ volts is applied to the cathode of the thyratron and the grid is connected to ground. Although a positive voltage is used for the bias, the effect is the same as if -3.1 volts had been applied to the grid. To make the operation of the thyratron more stable, the bias voltage is obtained from a regulated voltage source by means of a voltage divider.

(2) A bank of eight capacitors is provided to furnish a wide range of sawtooth sweep frequency. Thus, a frequency range can be selected by the switch S_3, and the frequency within each range can be varied by the resistor R_{32}. The total frequency range provided in this particular system is from two cycles per second to 50,000 cycles per second.

(3) In some applications where a linear sweep voltage is necessary, the thyratron sawtooth generator may be modified, as shown in figure 285. In this circuit, the charging resistor has been replaced by the pentode V_1.

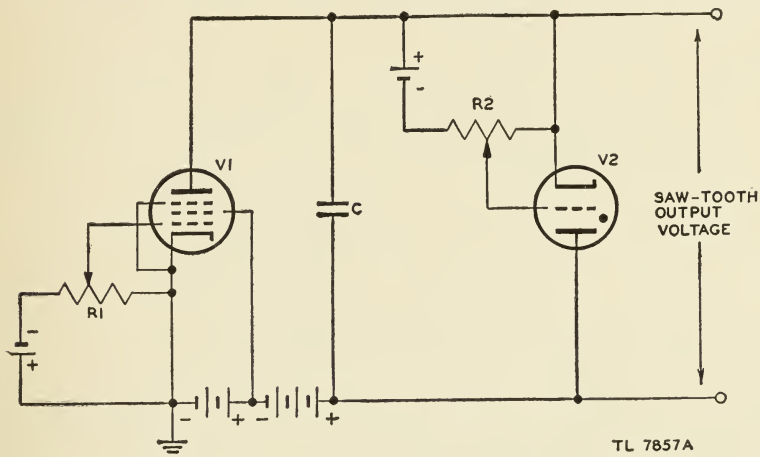

Figure 285. Controlled charging current thyratron sawtooth generator.

The pentode is so operated that within the range of voltage applied across the tube the plate current is constant. The current that flows into the capacitor C must pass through the pentode V_1. Since current is a moving charge, a current flowing into a capacitor will increase the charge on the capacitor. The voltage on a capacitor depends on the capacitance and on the amount of charge. If the current flowing into a capacitor is constant in magnitude, the voltage across the capacitor must rise linearly, since equal amounts of charge are added during similar unit lengths of time. If the pentode passes a constant current, the sawtooth waveform *produced* will be linear. The frequency of this sawtooth generator may be varied by changing the capacitor and by varying the bias of the pentode V_1 so that a constant current of larger or smaller amplitude will be passed.

(4) The thyratron sawtooth generator is preferable to the neon bulb sawtooth generator for several reasons:

(*a*) The voltage drop across a thyratron is less than that across a neon bulb.

(*b*) The thyratron will pass a larger instantaneous current than the neon bulb.

(*c*) The thyratron deionizes more quickly than the neon bulb.

(*d*) The thyratron ionizes more dependably than the neon bulb, and the frequency of the thyratron circuit is, therefore, more stable.

(5) Because the thyratron passes a larger instantaneous current and deionizes more quickly than the neon bulb, the capacitor is discharged more rapidly, and the sweep frequency may be made higher.

d. Vacuum-tube sawtooth sweep generator. (1) For some applications it is desirable to have a sweep voltage which is rigidly controlled by a pulse generator. In such cases, the thyratron is replaced by a vacuum tube. A

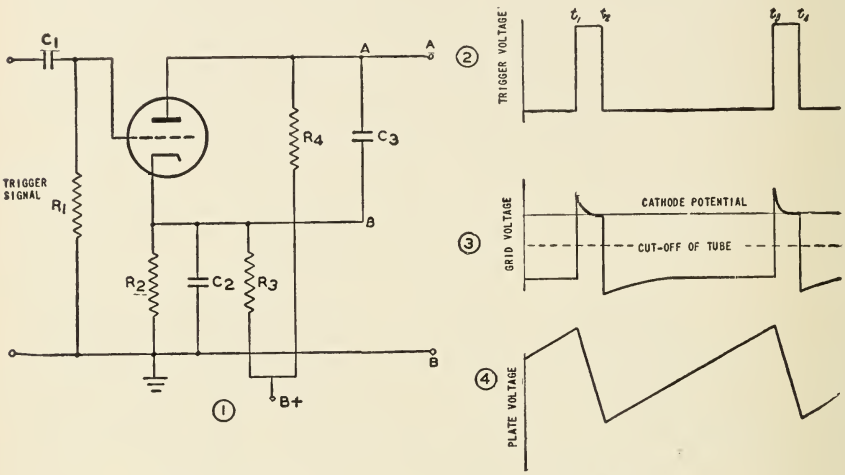

Figure 286. Vacuum-tube sawtooth generator.

sweep circuit in which a vacuum tube is used is not a relaxation type of oscillator, since the action is controlled entirely by the grid, and no conduction is possible until the grid bias permits it, irrespective of how high the capacitor voltage may rise.

(2) A sawtooth generator circuit is shown in figure 286. This is a very simple circuit; however, many other more complex circuits are possible.

(3) The trigger signal is assumed to be a rectangular wave from a multivibrator (fig. 286②). This pulse voltage is coupled into the grid of the sawtooth generator through C_1. The leading edge of the trigger pulse is applied to the grid at time t_1 and drives the grid positive. The grid draws current which partially charges C_1. At the trailing edge of the pulse, the grid is driven negative by the discharge of C_1 through R_1. Since the time constant C_1R_1 is not long, the charge can leak off C_1 before the next pulse is applied. The cathode is biased so that the tube is cut off when no signal is applied to the grid. When the tube is cut off, capacitor C_3 will charge toward the supply voltage. However, at some time t_3, long before the voltage to which C_3 is charged reaches the supply voltage, another pulse is applied to the grid. This pulse will cause the tube to conduct heavily, and capacitor C_3 will be discharged during the interval between T_3 and T_4. Since the resistance of the tube in this condition is very low, capacitor C_3 will discharge rapidly through the tube, and a sawtooth voltage will appear across C_3. However, it is preferable to take the voltage off between point A and ground, rather than across capacitor C_3. The same waveform will appear between A and ground that appears

between A and B, since the impedance of bypass capacitor C_2 causes point B to be practically at ground potential for a-c voltage.

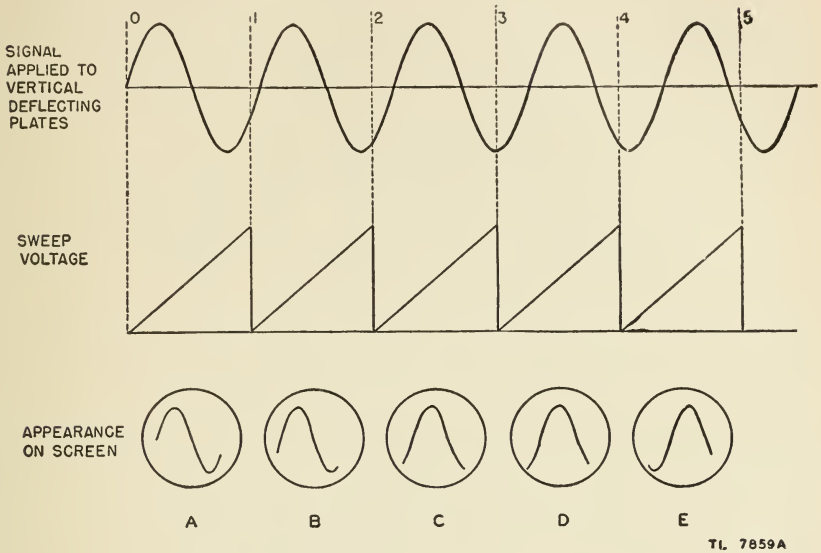

Figure 287. Apparent motion of oscilloscope patterns on screen.

e. Synchronization of time-base circuits. (1) In order to obtain a stationary pattern on the oscilloscope screen, the period of the sweep must be exactly equal to the period of the waveform to be observed, or some whole multiple thereof, for a stationary pattern. If the lengths of the two periods are almost the same, the pattern will drift across the face of the oscilloscope, as illustrated in figure 287. The signal voltage shown is a sine wave whose period is slightly longer than the period of the sawtooth sweep. This means that the frequency of the sawtooth is higher than the frequency of the signal. In the pattern shown at A, only the part of the sine wave included between 0 and 1 will appear. On the second sweep, the part between 1 and 2 will show, but since it differs slightly from the part shown in A, a slightly different picture will appear on the screen. In the sweeps that follow, the picture will continue to change. The effect is the same as if a long piece of cardboard with a sine wave drawn on it were pulled slowly past a window, allowing to be seen only as much as is included between the lines 0 and 1 in figure 287. In the case shown, the picture appears to travel across the screen from left to right. The speed at which the movement seems to take place depends on the difference of frequency between the signal and the sweep.

(2) In order that the signal will appear stationary on the screen, the frequency of the sweep is made exactly the same as the frequency of the signal to be observed. This is called synchronization. In many cases, however, it is desirable to observe more than one cycle of the signal. The sweep must then be synchronized at some frequency lower than the signal frequency. If two cycles are to be observed, the sweep frequency must be exactly one-half the signal frequency. It must be one-third of the signal frequency to show three cycles.

(3) In the thyratron sawtooth generator, the bias on the grid controls the break-down voltage of the tube. It is possible, therefore, to synchronize the sweep generated by a thyratron circuit rather easily by applying a synchronizing signal to the grid. A simple circuit in which this may be done is shown in figure 288. A voltage divider R_1 is included so that the magnitude of the synchronizing signal may be varied.

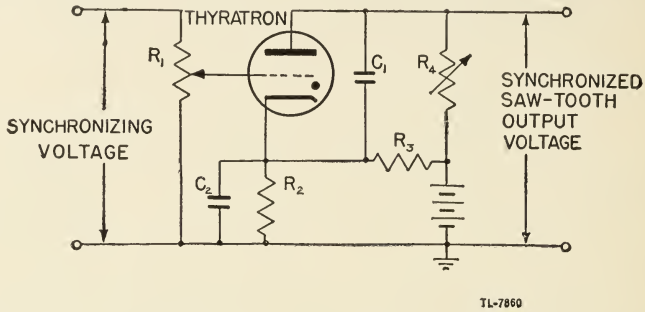

Figure 288. Thyratron sweep circuit with provision for synchronization.

(4) The waveforms in figure 289 show the operating conditions of the thyratron and the effect of the synchronizing voltage on the sweep. The normal bias, shown in ②, is such that the voltage on the capacitor

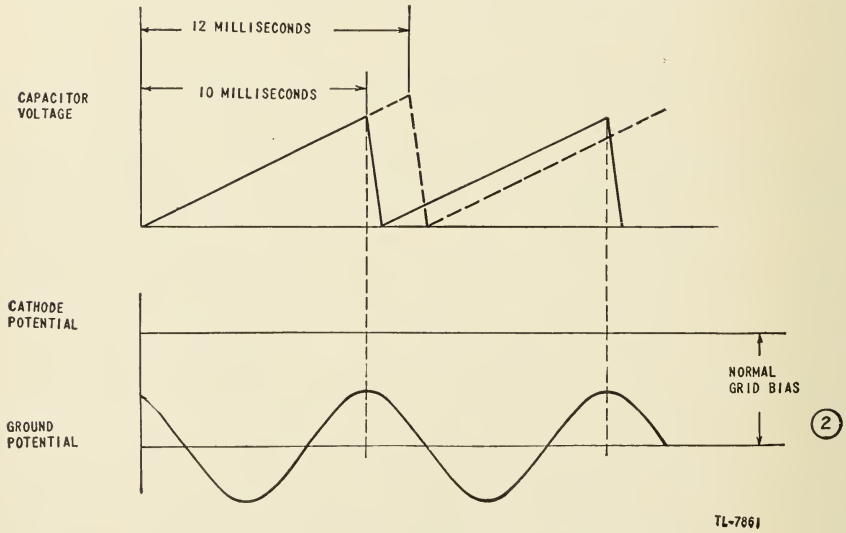

Figure 289. Action of synchronizing signal.

will build up to break-down in 12 milliseconds. If the signal to be observed has a frequency of 100 cycles per second, and therefore a period of 10 milliseconds, the sweep will be out by 2 milliseconds. The peak of the 100-cycle synchronizing signal on the grid will lower the grid bias sufficiently at the end of 10 milliseconds to cause the thyratron to break down. By this action, the period of the sweep is forced to be exactly the same length of time as the period of the signal, and a steady picture will appear on the screen of the oscilloscope.

(5) The synchronizing circuit of the DuMont oscilloscope is shown in figure 284. The switch S_2 is used to select the source from which the synchronizing signal is obtained. In the left position, the synchronizing signal is obtained from some external source. A series of pulses may be introduced here to provide more precise synchronization than is possible with a sine wave. Since the center position applies a voltage at line frequency to the thyratron grid, the waveforms in devices operated from the same source of power as the oscilloscope may be investigated simply. The right position, marked INT, connects the thyratron grid to the vertical amplifier, so that whatever signal is under investigation can be stopped on the screen when neither of the other positions can be used.

(6) In using an oscilloscope, the synchronizing control should be turned to zero and the frequency of the sweep should be adjusted by the fine frequency control to achieve maximum stability of the pattern on the screen. If after adjustment there is still any tendency for the pattern to drift across the face of the scope, it may be stabilized by turning up the synchronization control just enough to stop the apparent motion of the pattern. If the synchronization control is turned too high, the pattern on the screen may be distorted. The effect of too large a synchronizing signal is shown in figure 290. The firing voltage of a thyratron varies inversely

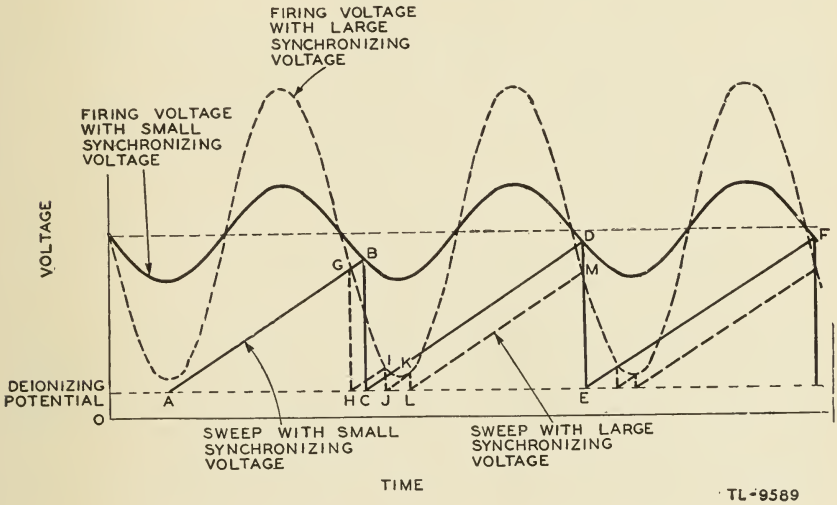

Figure 290. Distortion of sweep resulting from too much synchronizing voltage.

with the grid potential on the tube. That is, as the grid potential increases in a negative direction, the firing voltage increases in a positive direction. The horizontal line E_F (fig. 290) represents the firing voltage of the tube resulting from the fixed bias on the grid. Now, assume that a small value of synchronizing voltage is injected on the grid. The grid potential will vary with the synchronizing frequency and the firing voltage will vary inversely with the grid potential. The firing point, then, will lie along the solid curve (fig. 290). The voltage across the tube rises along the solid line AB until it equals the firing voltage at B. The tube then fires and the sweep voltage drops to C when the tube deionizes. The rise in

potential begins again and continues to D where the tube again fires. The sweep is now in step with the synchronizing frequency. However, if the synchronizing control is adjusted so that a large value of synchronizing voltage is injected on the grid, the firing point of the thyratron will lie along the dotted curve of figure 290. The voltage across the tube rises as before along the line AB. In this case, however, it intersects the dotted curve at point G and the tube fires. The voltage across the tube drops to H and the charge begins again. The rise can last only until the point of intersection with the dotted curve is reached at point I when the tube fires again. The next rise intersects the curve at K and the tube fires. Thus the sweep has been started at points H, J, and L, or three times in one alternation. The pattern on the screen will therefore be distorted and a true picture of the waveform will not be presented.

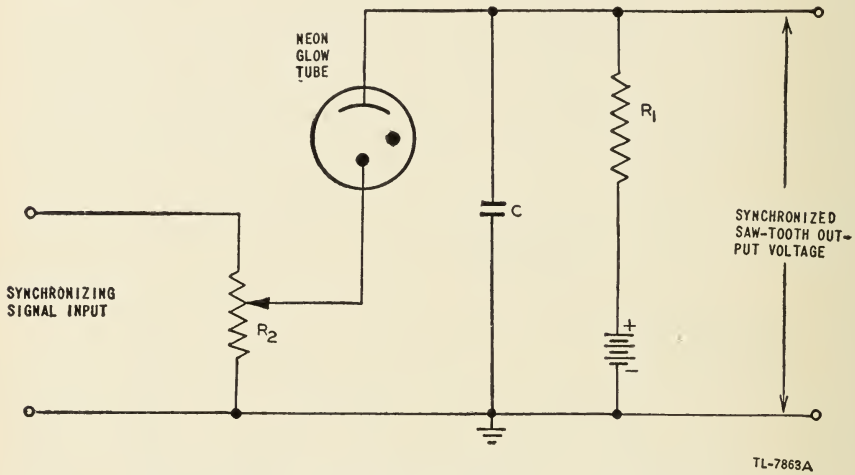

Figure 291. Synchronized neon bulb sawtooth generator.

(7) It is possible to synchronize the neon bulb sawtooth generator by a circuit of the type shown in figure 291. In this case, a large voltage is required to effect the synchronization. The synchronizing voltage is in series with the sweep voltage. If the frequency of the sweep and the frequency of the synchronizing signal are reasonably close together, the neon tube will fire at the peak of the synchronizing signal, just a little before the tube would have fired without the synchronizing signal. This

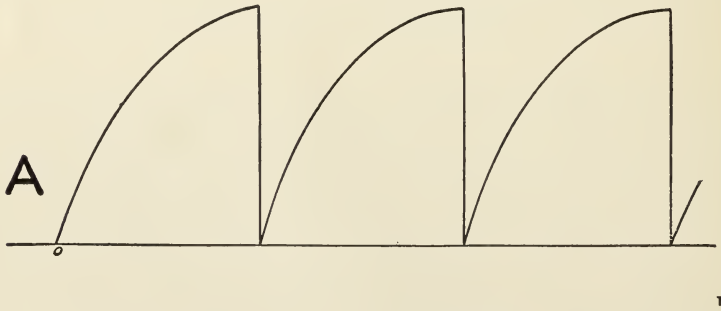

Figure 292. Exponential sweep voltage.

circuit is not widely used, however, since the thyratron sawtooth generator is much more useful for most purposes.

f. Exponential sweep generator. If the charging of the sweep capacitor in a sawtooth generator is not limited to the linear part of the exponential charging curve, a nonlinear sawtooth wave may be obtained. Such a wave is shown in figure 292. It will be noticed that the curve is practically linear in the range *o–A*, the region in which linear sweep voltages are generated. The exponential sweep does not give a true picture of a wave-shape on the screen, but it may be useful for other purposes. A sine-wave signal applied to an oscilloscope on which the sweep is exponential is shown in figure 293. Such a sweep is said to be nonlinear, since the spot

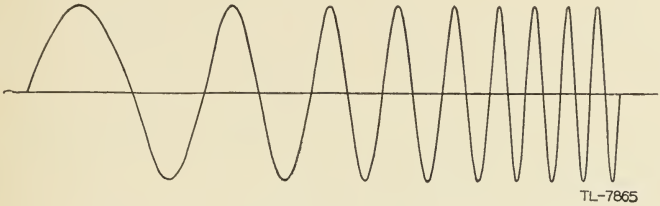

Figure 293. Sine wave on an exponential sweep.

does not move along the time base an equal distance during each equal unit of time. The simplest unit of time to choose in looking at figure 293 is one cycle, since each cycle is completed within the same time period.

g. Sinusoidal sweep. (1) A sinusoidal sweep is obtained by applying a sine wave of voltage to the horizontal deflecting plates of a cathode-ray tube. A trace is made which is swept alternately from left to right and from right to left.

(2) The characteristics of a sine-wave sweep are as follows:

(*a*) The speed of the spot across the screen varies continuously. It is fast in the center of the screen, and slow near each end.

(*b*) The return trace is of the same speed as the main trace; thus a reversed waveform may be traced on the return.

(3) It is possible to increase the amplitude of the sine wave to such a degree that the fairly linear part of the trace will occupy the whole screen. While this may be useful in some cases, it is generally difficult to synchronize the desired waveform at the linear part of the trace. The sine-wave sweep is used only for indicators showing pulse phenomena that take place once per cycle.

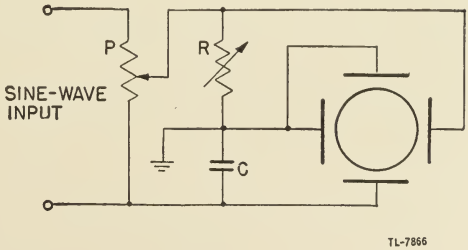

Figure 294. Phase-shifting circuit used to produce an elliptical or circular trace.

h. Elliptical and circular sweeps. (1) An elliptical or circular trace can be obtained on an oscilloscope by use of a circuit such as that shown in figure 294. The sine-wave voltage obtained from the potentiometer P is applied to the R-C phase shifter. The voltage across the capacitor C lags the voltage across the resistor R by 90°. These two voltages are shown in figure 295.

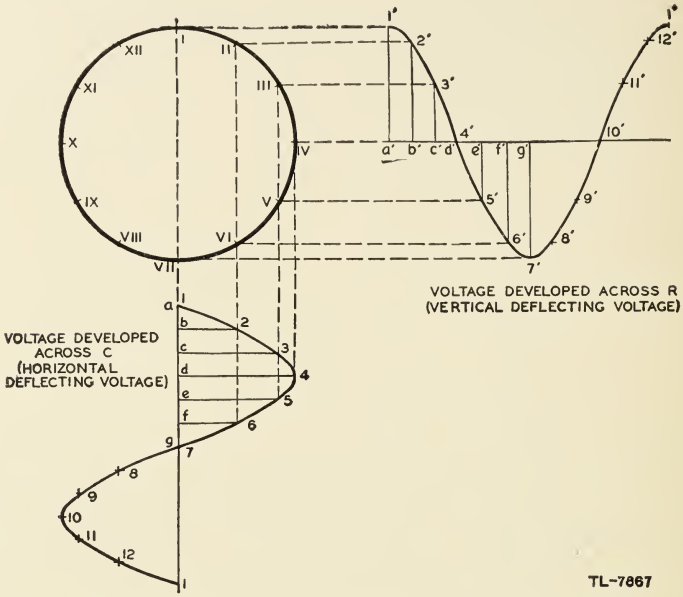

Figure 295. Generation of a circular trace by two sine waves 90° out of phase.

(2) Each voltage wave has been divided into 12 equal time intervals. Point 1 represents exactly the same instant as does point 1′. As has previously been shown, the position of the spot on the screen of a cathode-ray tube at a given instant is the resultant of the two forces acting on it at that instant. At time 1 (fig. 295) the voltage on the horizontal deflecting plates is zero. This means that no force will be exerted by these plates on the electron beam. The resultant force at this instant, then, must be equal to the force exerted by the vertical deflecting plates. The voltage on these plates is equal to a'–$1'$ at this time, and the spot will be attracted to 1. At a later time, 2, the force of the horizontal plates will equal $b2$ and the force of the vertical plates will equal $b'2'$. The resultant of these forces will attract the beam to II. In a similar way, it can be shown that the beam will be attracted successively through III, IV, V, etc.

(3) If the voltage on the horizontal deflecting plates is exactly equal to the voltage on the vertical deflecting plates, and if these voltages are exactly 90° out of phase, the spot will be made to trace a perfect circle on the screen. If the voltages are not of equal amplitude or are not 90° out of phase, an ellipse will be traced on the screen instead of a circle.

(4) Potentiometer P (fig. 294) controls the amplitude of the sine-wave voltage applied to the phase-shifting circuit. If P supplies a large voltage, then the voltage across both R and C will be large. Consequently, the circle traced on the screen will be of large diameter. Thus, the magni-

tude of the voltage applied to the deflecting plates determines the diameter of the circle. If the potentiometer is moved back and forth by a synchronous motor operated from the same source from which the deflecting plates are energized, the radius of the circle traced can be varied continuously, and the pattern may be a spiral, as shown in figure 297②. The circular sweep is sometimes used to obtain a longer trace on a given screen than is possible with a sawtooth sweep.

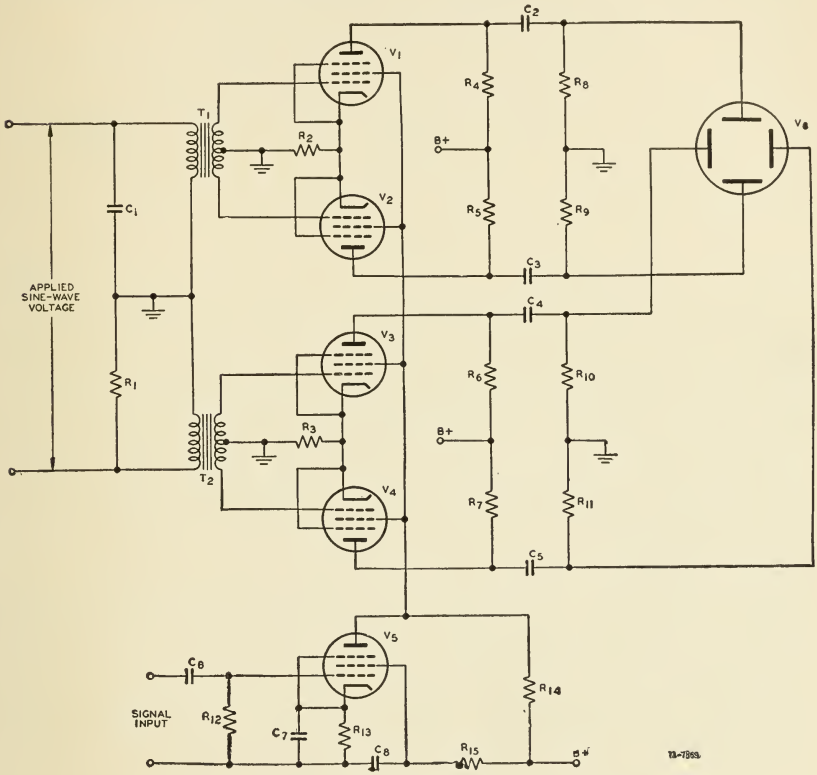

Figure 296. Circular sweep generator circuit.

(5) Another type of circuit for generating a circular sweep is shown in figure 296. The operation of this circuit is based on the same principle as the simpler circuit of figure 294, but the added elements provide greater flexibility.

(6) The values C_1 and R_1 have been selected so that a circular sweep will be generated at the frequency of the applied voltage. The deflection of the electron beam in this circuit is push-pull. That is, the voltage on one deflecting plate is 180° out of phase with the other plate in each pair. Transformers T_1 and T_2 are used to provide sinusoidal grid signals that are 180° out of phase for the two pairs of push-pull amplifiers. The gain of all four amplifier tubes is the same, and is controlled by the voltage on the screen grid. Several types of patterns that may be obtained from this circuit are shown in figure 297.

(7) The voltage on the screens of amplifiers V_1, V_2, V_3, and V_4 is controlled by the voltage at the plate of V_5. If no signal is applied to the

grid of V_5, the voltage at its plate will be constant. Since the constant voltage will mean constant gain of the amplifiers, a circle will be traced. However, if a negative pulse is applied to the grid of V_5, the voltage at the plate increases for the duration of the pulse. The screen voltage on the amplifiers increases by the same amount, so that the gain of these tubes is greater during the pulse. The trace will jump suddenly to a circle of larger diameter for the duration of the pulse, and a pattern of the type shown in figure 297① will be produced.

Figure 297. Some patterns obtainable with the circuit of figure 296.

(8) If the frequency of the applied sine-wave voltage is 1,000 cycles per second, and sawtooth voltage of 250 cycles per second is applied to the grid of V_5, the gain of the amplifier tubes will be varied continuously during four cycles of the sine wave. As the gain increases from zero to maximum, the spot rotates on a circle of ever-increasing diameter. This generates the spiral pattern of figure 297②. If the sawtooth is not a submultiple of the applied sine wave, the spiral will revolve, causing a pinwheel pattern.

(9) On the other hand, if the frequency of the sawtooth voltage applied to the grid of V_5 is high compared to the frequency of the applied sine wave, the gain of the amplifiers will be varied from zero to maximum at a high rate. If the difference between the frequency of the sawtooth and the sine wave is great enough, the spot will appear not to move around the circle appreciably during one cycle of the sawtooth and a pattern that looks like the spokes of a wheel (fig. 297③) will be generated.

i. Sawtooth sweep for electromagnetic deflection. (1) The deflection of the electron beam in an electromagnetically deflected cathode-ray tube is proportional to the field strength set up within the tube. The field strength is proportional to the current passing through the deflecting coil. If it is desired to deflect the electron beam linearly, the current through the coil must increase linearly with time. When the end of the sweep is reached, the electron beam must be returned to its starting point quickly. The current wave required for electromagnetic deflection must then be of sawtooth shape if the resultant sweep is to be linear. It should be observed that it is the *current* wave which must be a sawtooth for an electromagnetic tube, *not* the *voltage* wave, as in the electrostatic tube.

(2) The deflecting coils are formed by winding wire around either a nonmagnetic fiber core or around an iron core. The wire used, no matter how large it may be, will have some resistance to the flow of current. In addition, the coil will possess the electrical property of inductance. Therefore, the sawtooth current wave must be made to flow in a series R-L circuit.

(3) At slow sweep speeds, the effect of the inductance in the deflecting coil is negligible, and a potentiometer arrangement similar to that shown in figure 298 may be used. The sliders 1 and 2 on the potentiometer are

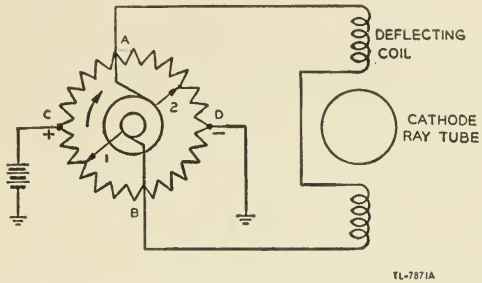

Figure 298. Potentiometer method of sweeping an electromagnetic cathode-ray tube.

spaced 180° apart, and a constant voltage is applied at the two points C and D diametrically opposite each other. If slider 1 is initially at point B and slider 2 is at point A, no voltage is impressed on the deflecting coil, since points A and B are at the same potential. As the sliders rotate, 1 becomes more positive and 2 becomes less positive. The voltage across the deflecting coil increases from zero at point B to a maximum at point C. If this change occurs slowly, and the time constant of the inductance is relatively short, the current is able to build up at the same rate at which the voltage increases. As the slider continues to rotate, the voltage impressed on the deflecting coils decreases to zero and then reverses polarity as slider two passes point B and moves on toward C. The sweep produced is not a sawtooth, since the spot moves uniformly across the screen in one direction, and then changes direction and moves back to its original position at the same speed. Because of the varying voltage drop in the resistance of the deflecting coil caused by the varying current in the coil, the trace produced by this circuit is not truly linear if the potentiometer is uniformly wound (resistance directly proportional to the angle of rotation). However, this effect may be corrected by the use of a potentiometer with a suitable nonuniform winding.

(4) It was shown in section III that current in a pure inductance can be made to rise linearly with time only when a square wave of voltage is applied across the inductance. If there is any resistance associated with the inductance, the current rises along an exponential curve.

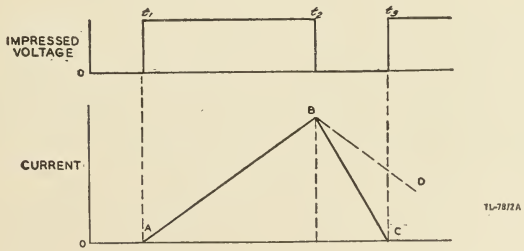

Figure 299. Current flow in a pure inductance with square-wave voltage impressed.

(5) When a square wave of voltage is impressed on a pure inductance, the current rises linearly toward an infinite magnitude along a line such as AB in figure 299. If at time T_2 the impressed voltage falls immediately to zero, the current flowing in the inductance must decrease to zero. If the circuit in which the current decays is exactly the same as the circuit in which the current built up, the current must fall off toward zero at exactly the same rate at which it built up. Under this condition, a triangle wave of current is generated (AB–BD in fig. 299). In any practical circuit, the constants of the circuit change when the voltage applied falls to zero. If the voltage is applied by means of a switch, a resistance is introduced by opening the switch, since an arc will form. The heat generated in this arc represents the energy that was stored in the magnetic field. If this energy can be dissipated very quickly, as in a very hot arc, the field of the inductance, and, consequently, the current through it, can collapse to zero very quickly. The swift return to zero along the line BC represents the time required to dissipate the energy in the magnetic field. The time between t_3 and t_2 is shown on an expanded scale, however, to indicate that the current cannot collapse to zero instantly in any practical circuit. Moreover, the line BC should not be straight, but since the true curve is complex and in any case goes to zero in a short time, the straight line is a satisfactory approximation.

(6) Since any deflecting coil that is practical for use with an oscilloscope has resistance, the shape of the voltage wave impressed across the inductance must be modified to compensate for the effect of the resistance. Figure 300 illustrates the evolution of a voltage wave which will cause a sawtooth current wave to flow in a coil having some resistance. A coil which has both resistance and inductance may be considered as two

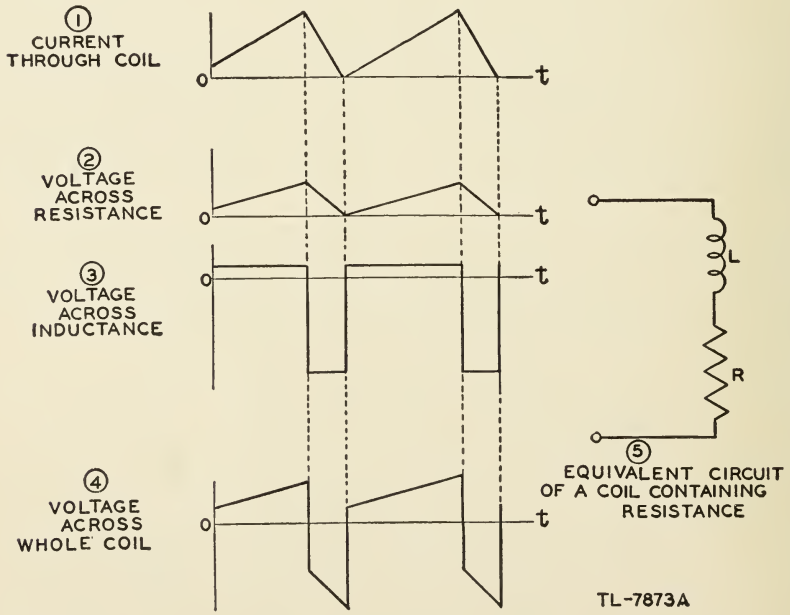

Figure 300. Development of voltage waveform required to generate sawtooth current in an inductance containing resistance.

separate elements in series (fig. 300⑤). The current through the coil is to be of the form shown in ①. If this current flows through a resistor, a voltage of exactly the same shape appears across the resistor ②. If a current of this waveshape flows through a pure inductance, a square-wave voltage must appear across the inductor, as in figure 300③. Since the voltage across the resistor is in series with the voltage across the inductance, the two voltage waves at ② and ③ may be added to produce the shape of the voltage that must be impressed on the whole coil to cause the sawtooth current to flow through the coil (fig. 300④).

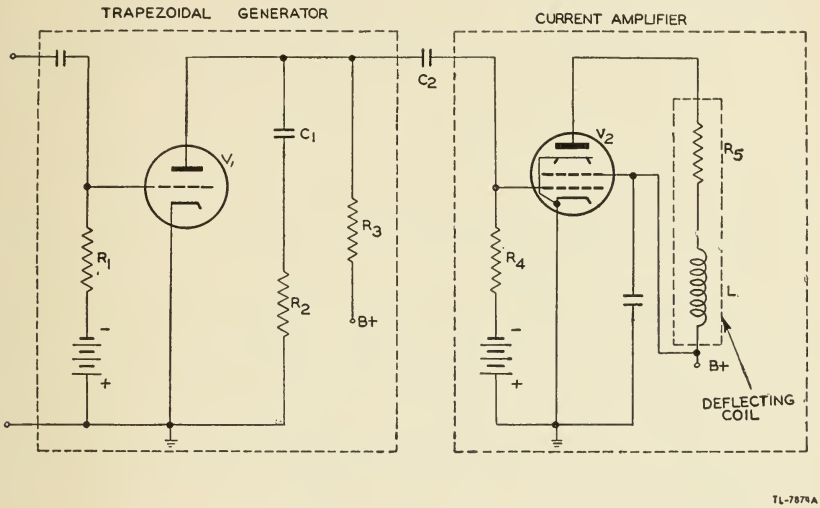

Figure 301. Circuit for generating a sawtooth current wave for electromagnetic deflection.

(7) A circuit which is capable of developing this waveform is shown in figure 301. If tube V_1 is operated so that capacitor C_1 charges on the linear part of the charging curve, the current flowing in R_3, C_1, and R_2 during the charge must be constant. If this is so, the voltage across C_1 will rise linearly (AB, fig. 302②). A constant current flowing through R_2 develops a constant voltage across it ($A'B$, fig. 302③). When V_1 is made to conduct at time 2, the current through C_1 and R_2 reverses as C_1 starts to discharge through the tube. This current causes the voltage across R_2 to swing negative very quickly (B–B' in figure 302③) as the capacitor discharges from time 2 to time 3. The voltage that appears at the plate of V_1 is the sum of the voltages across R_2 and C_1, and produces the waveform shown in figure 302④. This is called a trapezoidal wave. The axis of the trapezoidal wave is along the line X–X' after it passes through coupling capacitor C_2. The trapezoid A''–A'–B–B'–B'' causes a sawtooth current to flow in the deflecting coils. At time B'' the current in tube V_2 must be reduced to zero, since the tube is cut off by the negative swing of voltage on its grid. If this occurs, the current in the deflecting coils must be reduced to zero at the same time.

(8) In order to provide some means of dissipating the energy in the electromagnetic field so that the current can fall to zero, a resistor is often connected in parallel with the deflecting coil. This resistor also

serves to reduce the Q of the deflecting coil, since in many cases the rapid change of current passing through the coil at the time of the return trace shocks the coil into oscillation. If the Q of the coil is sufficiently high, the oscillations may continue into the next sweep (fig.

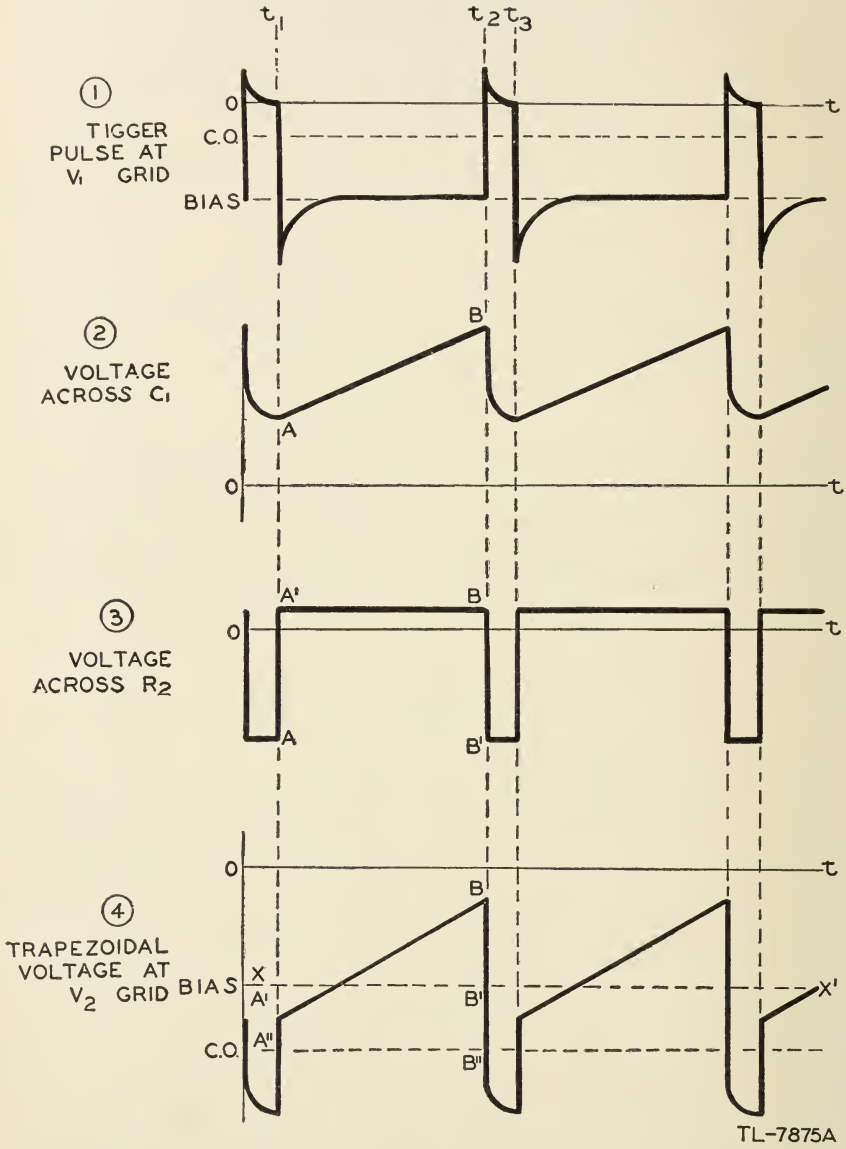

Figure 302. Waveforms in circuit of figure 301.

303), which will cause a very nonlinear sweep at the beginning of each trace. If the Q of the deflecting coil is reduced, the oscillations can be made to die out before the next trace is started.

(9) Because a resistance shunted across the deflecting coil reduces

the current through the coil, a diode is frequently connected in the manner shown in figure 304. When the current through tube V_1 is increasing to provide the forward-sweep current, the voltage at the plate of V_1 is less than the supply voltage by the amount of the drop through

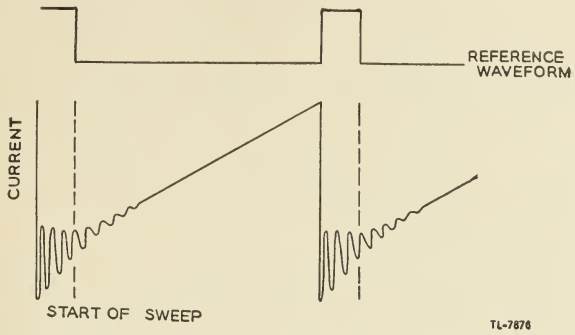

Figure 303. Oscillations in deflecting-coil current during and after return trace.

the deflecting coil. Therefore, the cathode of the damping diode V_2 is more positive than its plate and the diode will not conduct. When the current through V_1 falls to zero at the end of the sweep, the voltage at the plate rises above the supply voltage as the collapsing field of the inductance tries to generate in the inductance a voltage which will main-

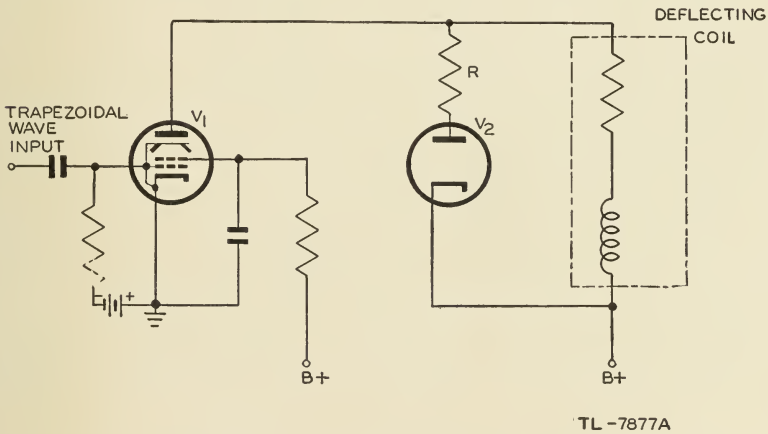

Figure 304. Diode used as damping resistance across deflecting coil.

tain the same current flowing in the coil. The energy in the coil will be dissipated in the resistance R, and any oscillations which attempt to raise the voltage at the plate above the supply voltage will be quickly damped out.

(10) Another form of sawtooth generator for electromagnetic deflection is shown in figure 305. This circuit is essentially the same as the hard tube sawtooth generator shown in figure 286, except that a linear rise of current is generated in an inductor instead of a linear rise of volt-

age across a capacitor. Tube V_1 is normally cut off by the bias applied to the cathode by the voltage divider consisting of R_2 and R_3. At time t_0, the square-wave signal on the grid swings positive and permits a

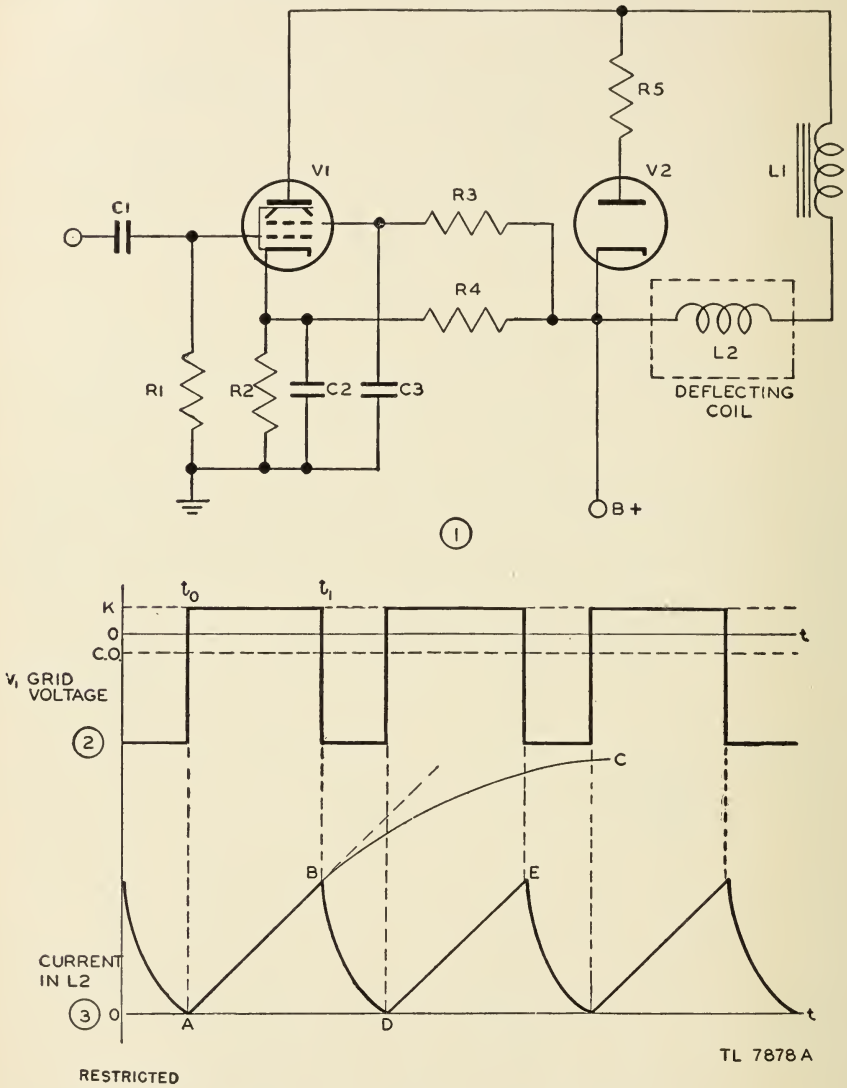

Figure 305. Sawtooth current generator.

current to pass through R_2, tube V_1, L_1, and L_2 (the deflection coil). The current will build up toward some steady value along an exponential curve, such as ABC. The first part of this built-up curve is very nearly straight, and if the current is stopped at some time t_1 before the curve departs from a straight line appreciably, a reasonably linear rise of current will have been produced in the deflecting coil. At time t_1, the current is stopped, and the energy of the magnetic field is dissipated in R_4 and the diode V_2.

(11) In many applications it is desirable to have the sweep time only a fraction of the repetition period. Therefore, the gate voltage applied to the sweep generator has a shape similar to the waveform shown in

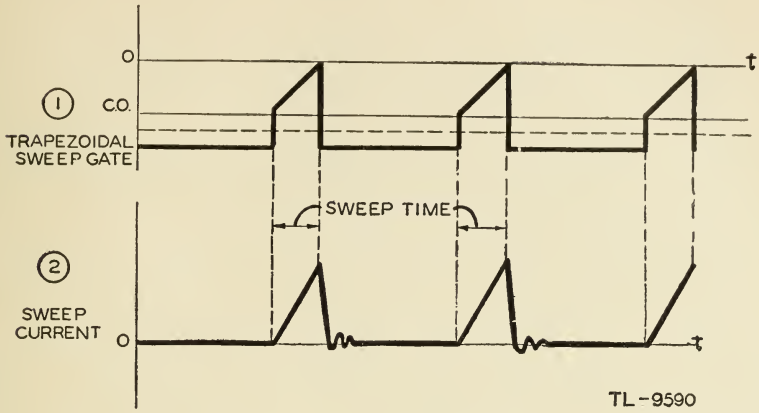

Figure 306. Sweep duration shorter than repetition period.

figure 306①. The sweep current can flow during only the short interval in which the gate voltage allows the sweep-generator tube to conduct. One advantage of this type of operation is that it is unnecessary to take any precautions to prevent oscillations in the deflecting coils, since such oscillations take place during the time when the electron beam is cut off (fig. 306②), and their effect is therefore not apparent on the screen.

64. PHASE-INVERTER CIRCUITS. a. Defocusing of unbalanced deflection. In many electrostatic oscilloscopes, one plate of each pair of deflecting plates is connected to the second anode or to ground, and the signal is applied to the other plate. This leads to defocusing of the electron beam, which varies with the amount of deflection. This defocusing may be better understood if it is remembered that the electro beam has an appreciable width at the deflecting plates. When the beam is pulled toward one of the deflecting plates, the outer electrons are accelerated to a velocity higher than that of the inner electrons, owing to the more positive voltage on the deflecting plate. The faster electrons will not be deflected as much as the slower ones, and the stream which was converging to a point on the screen will now tend to converge at a point

Figure 307. Distortion of trace caused by extreme defocusing of electron beam by unbalanced deflection.

beyond the screen, with consequent increase in the size of the spot. In extreme cases, the trace will be distorted at each end of the sweep in the manner shown in figure 307. This defocusing effect is reduced somewhat by the fringing of the electrostatic field at the edges of the plates (fig. 258).

b. Push-pull deflection. If one deflecting plate is driven positive by a signal and the other is driven negative by the same signal 180° out of phase with the first, the average potential of the pair of deflecting plates will remain constant. An increase of voltage on one plate is exactly balanced by a decrease of the same magnitude on the other. A sweep of this nature is termed push-pull. It eliminates almost completely the defocusing effect of unbalanced deflection.

c. Application of paraphase amplifier. Since most sweep generators produce only one wave, a paraphase amplifier circuit must be used to obtain two sweep waves 180° out of phase for push-pull deflection. Circuits which will accomplish phase inversion are discussed in section VI.

d. Type 208 paraphase amplifier. The paraphase amplifier used in the DuMont type 208 oscilloscope (fig. 308) is similar to that discussed in paragraph 41e(4). The sawtooth voltage wave applied to the grid of V_{10} produces across R_{42} a voltage wave of the same shape and polarity,

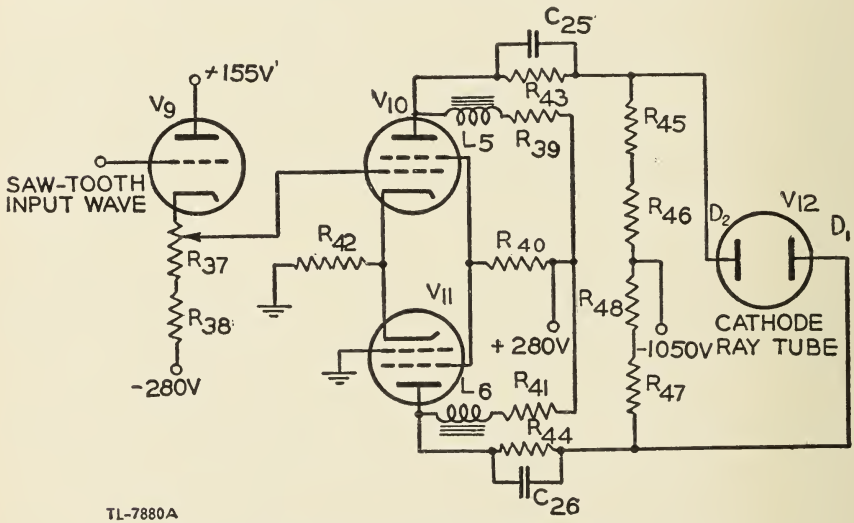

Figure 308. Cathode-coupled paraphase amplifier circuit of DuMont type 208 oscilloscope.

but of approximately half the amplitude of the input. This voltage is used to drive V_{11} and since it is a degenerative voltage for V_{10}, the voltage effective between grid and cathode of this tube is approximately half of the input voltage. Thus the input voltages to the two tubes are nearly equal, but of opposite polarity when referred to the grids, so that the outputs of the circuit are two voltages of approximately the same amplitude but of opposite polarity. Two paraphase amplifiers are used in this oscilloscope to furnish push-pull deflection for both the horizontal and vertical deflecting plates. Other types of paraphase amplifiers and other circuits for producing two equal waveforms of opposite polarity are discussed in paragraph 41.

65. POSITIONING CIRCUITS. a. General. In almost every application of the cathode-ray oscilloscope, it is necessary to be able to move the whole trace to the most desirable part of the screen. For example, the sweep voltage on a 5-inch cathode-ray tube may be made great enough to cause a total deflection of 10 inches. Obviously half the sweep will not appear on the screen, but by adjusting the horizontal position control, any part of a waveform may be brought on the screen for detailed study.

b. Position control for electrostatic tubes. Position control is accomplished in an electrostatic cathode-ray tube by the application of d-c voltages to the deflecting plates. In small oscilloscopes, where one deflecting plate of each pair is tied to the second anode and to ground, the centering voltage may be applied only to the other plate. For this kind of oscil-

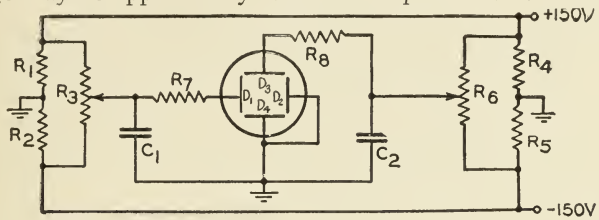

Figure 309. Centering control for cathode-ray oscilloscope which uses unbalanced deflection.

loscope, a circuit similar to that shown in figure 309 is generally used. The resistors R_1 and R_2 are part of the bleeder resistance across the power supply. Potentiometer R_3 is connected so that one end is positive with respect to ground while the other is negative. If the voltages to which R_3 is tied are of equal magnitude, there will be ground potential in the center of R_3. When the slider is set at the midposition, the voltage on plate D_1 is zero, and the beam will strike the center of the screen if the electron gun is aimed properly. When the slider of R_3 is raised, the spot will move to the left under the attraction of plate D_1. When the slider is below the midposition, the spot will be to the right of the center because of the repulsion of the negative plate D_1. Capacitor C_1 and resistor R_7 form a filter which prevents small variations in voltage

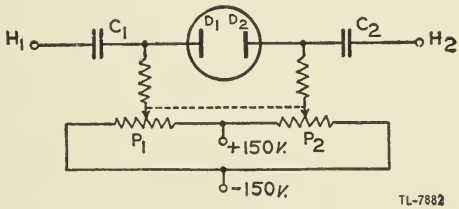

Figure 310. Centering control for push-pull deflection.

from causing the pattern to be unsteady. The resistor R_7 is usually one or two megohms. It is always included in the circuit to act as a filter resistor which prevents variations in power supply voltage from affecting the pattern, and as a current-limiting resistor in case the electron beam is deflected so far that it hits the deflecting plate. The vertical position control is the same as the horizontal control.

c. Position control in push-pull deflection. (1) In oscilloscopes in which push-pull deflection is used, the position control is also push-pull. The dual potentiometer used is sometimes called a "back-to-back" potentiometer. A circuit for push-pull position control along the horizontal axis is shown in figure 310.

(2) Potentiometers P_1 and P_2 are ganged together as indicated by the dotted line. When they are set in midposition, the d-c voltage on both plates is zero. If the control is moved in one direction, P_1 will pick off a positive voltage and P_2 will pick off an equal negative voltage. Thus, plate D_1 will pull the spot from the center and plate D_2 will push the spot in the same direction. By connecting one end of both potentiometers to a positive voltage and the other to a negative voltage, the spot may be made to move off the screen on either side. The deflection signal is applied to the plates through capacitors C_1 *and* C_2.

(3) In oscilloscopes which are designed for low sweep frequencies, capacitors C_1 and C_2 must be large (of the order of 0.5 μf) in order to pass all the low-frequency components of the sawtooth wave. When these capacitors are large in size, the position control becomes sluggish, since the capacitors take an appreciable time to change their charge when the position control is moved.

d. Position control in type 208 oscilloscope. (1) In order to avoid the sluggishness of the position control, a circuit of the type shown in figure 308 may be used. It is taken from the circuit of the DuMont type 208 oscilloscope shown in figure 281. The spot will follow instantaneously all changes of the position control in this circuit.

(2) The use of V_{10} and V_{11} as a paraphase amplifier circuit has already been discussed. The plates of two tubes are direct-coupled to the deflecting plates of the oscilloscope to prevent attenuation of the low-frequency signals. The average d-c voltage of the plates V_{10} and V_{11} will act as positioning voltages, since there is no blocking capacitor to keep this voltage off the deflecting plates.

(3) The cathode follower V_9 is designed so that there will be a point at about the middle of potentiometer R_{37} at which the voltage to ground will be zero. This is possible since the plate is connected to +155 volts and the cathode is connected through the load resistors to —280 volts. When potentiometer R_{37} is set at the ground potential point, the bias on V_{10} must be exactly the same as the bias on V_{11}. If no signal is applied, both tubes will conduct the same amount of current, and the voltage at the plate of V_{10} will be the same as the voltage at the plate of V_{11}. The spot will then be in the center of the screen if the electron gun is aimed accurately.

(4) If it is desired to move the spot in one direction, the slider on R_{37} is moved up so that the grid of V_{10} becomes positive with respect to ground. This causes V_{10} to pass a larger average current, and the cathodes of both tubes tend to become more positive. However, when the cathode of V_{11} becomes more positive, the bias on this tube is increased, and passes a smaller current. This tends to reduce the voltage drop across the common cathode resistor R_{42}, but the result is that the voltage across R_{42} will be larger than it was when the grid of V_{10} was at ground potential. Therefore, since V_{10} is passing a larger current than before, and V_{11} is passing a smaller current, the average voltage at the plate of V_{11} will be more positive than the voltage at the plate of V_{10}, and the spot will be

attracted to the right toward deflecting plate D_1. In a similar way, it can be shown that the spot will move to the left, or toward deflecting plate D_2, if position control R_{37} makes the grid of V_{10} negative with respect to ground.

(5) Movement of the position control potentiometer has very little effect on the gain of tubes V_{10} and V_{11}, since the actual shift of bias is so small that the tubes still work on the linear part of their characteristic. The over-all gain is affected slightly because the amplitude of the input signal to V_{10} varies somewhat as the slider on R_{37} is moved. However, since R_{38} is large compared to R_{37}, most of the signal voltage is developed across R_{38}. Thus, the over-all gain is decreased or increased approximately 1 percent.

(6) Since the voltage change which appears across R_{43} or R_{44} when the position control is moved is only about 10 percent of the change in voltage at the plates, capacitors C_{25} and C_{26} can change their charge so rapidly that the lag in the motion is unnoticeable.

66. CLAMPING CIRCUITS. a. General. Clamping circuits are used in oscilloscopes to fix the position of the trace on the screen. For example, when the trace must be divided into equal intervals of time, a calibrated transparent scale may be placed over the screen. To insure that the start of the sweep always coincides exactly with the zero mark on the calibrated overlay, a clamping circuit is used.

b. Application. (1) Any of the clamping circuits discussed in paragraph 45 may be used equally well with oscilloscopes. One simple circuit which is typical of clamping circuits used with cathode-ray oscilloscopes

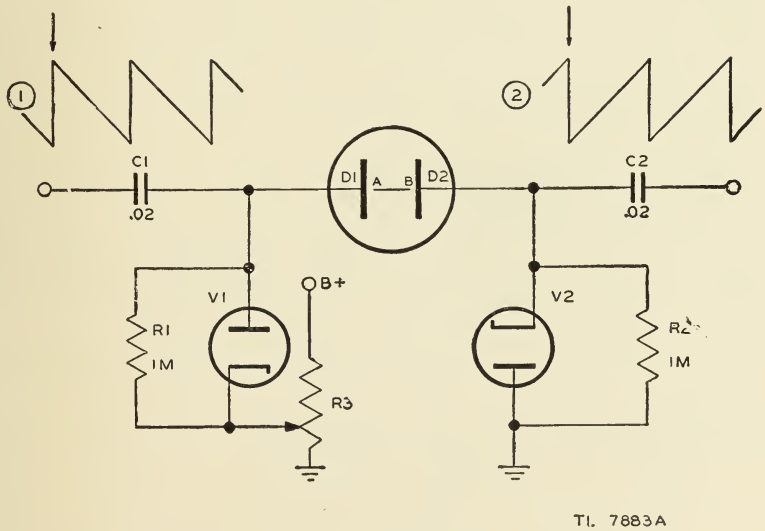

Figure 311. Simple clamping circuit.

is shown in figure 311. The beam of the cathode-ray tube, V_3, is deflected by the push-pull sawtooth voltages shown at ① and ② in the figure. The beam will therefore trace a bright line on the screen by moving from left to right at uniform speed, starting at A. At the end of the sweep,

the beam will move very quickly from B to A. The function of the clamping circuit is to force the point A to remain at the same place on the screen, in spite of variations in the amplitude of the applied sawtooth wave.

(2) If diodes V_1 and V_2 (fig. 311) were not connected, and the slider on R_3 were set at $+50$ volts, the average potential of plate D_1 would be 50 volts more positive than plate D_2, causing the spot to be attracted to the left of center in the absence of the sweep voltage. When the sawtooth voltages are applied, the potentials of the plates swing equal amounts above and below the average values. Thus, any variation in the amplitude of the sweep voltages would cause the beginning of the sweep to change position on the screen.

(3) In order to clamp the start of the sweep (point A, fig. 312) to a fixed potential, diodes V_1 and V_2 are connected in the circuit. The first cycle of the sawtooth voltage (fig. 312①) is shown before the diodes are connected so that the change brought about by the action of the diodes will be apparent. Before the diode was connected, the voltage at

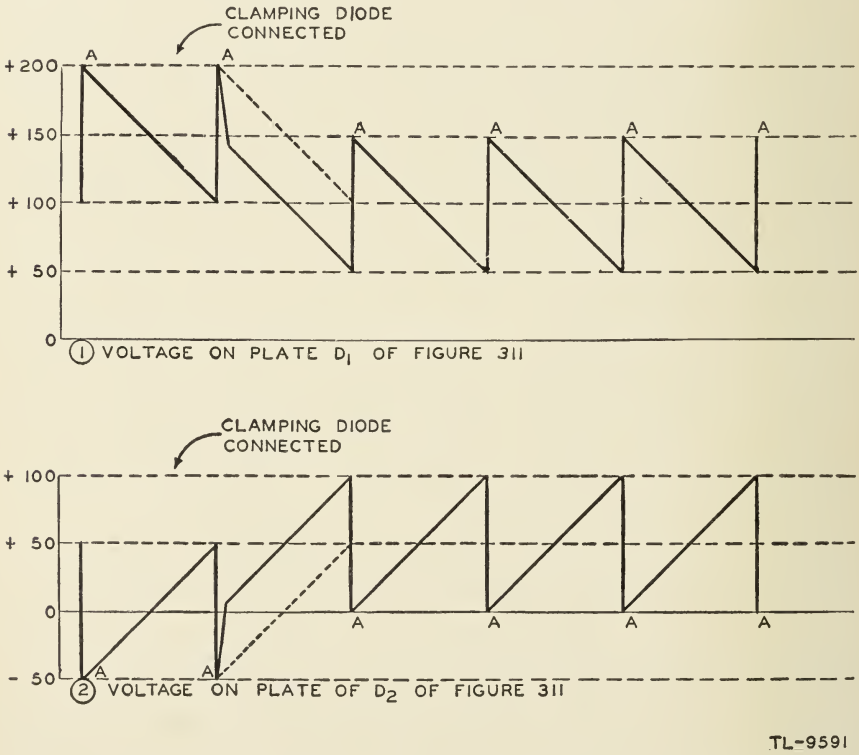

Figure 312. Sawtooth voltage waveforms in clamped sweep.

the plate of D_1 varied between $+100$ volts and ground potential. However, when the diode is put in the circuit, and the slider on R_3 moved so that the cathode of the diode is at $+150$ volts, any rise of plate voltage above this value is shorted out by conduction of V_1. When the diode conducts, capacitor C_1 is rapidly charged, so that the voltage on plate D_1

drops quickly to +150 volts, and thereafter the voltage falls in accordance with the sawtooth voltage. The effect of the diode, then, is to put a charge on C_1 sufficient to change the average voltage of the sawtooth voltage from +150 volts to +100 volts. The small amount of charge that leaks off C_1 during the sweep time is replenished at the start of each sweep, so that the start of the sweep is held fixed at +150 volts. Thus, variations in the amplitude of the sweep voltage can affect only the length of the sweep, since the starting point is held fixed.

(4) In a similar manner the voltage to which C_2 is charged is changed from zero to +50 volts by the action of diode V_2 (fig. 312②). Thus, the starting potential of each sweep on plate D_2 is clamped to ground potential. Note that the difference between the *average* potentials of two plates is the same as it was before the diodes were connected, so that the centering effect is the same, but that the voltage to which the slider on R_3 must be set to maintain this condition is higher in the case where the clamping tubes are used.

67. OSCILLOSCOPE AMPLIFIERS. a. General. (1) In order that an oscilloscope may have a wide range of use, it is desirable that an amplifier circuit be provided for the observation of small amplitude signals. Since such an amplifier must reproduce accurately the shape of the voltage waveform applied, it must have uniform gain for all frequencies over a wide band, and uniform phase shift for the same wide frequency band. To avoid nonlinear distortion caused by the curvature of the tube characteristic, the amplifier must be so operated that the input signal causes variation of plate current over the linear range only. The amplifier, then, must be a *video amplifier,* of the type discussed in paragraph 39.

(2) The amplifier must be designed for use over a wide band in order that the gain may be used to the fullest extent for sine-wave signals of widely different frequencies, and in order that waveshapes other than sine waves, which are made up of many frequency components, may be amplified faithfully. A square wave or a sawtooth wave is composed of many component voltages whose frequencies are harmonics of the fundamental. If the waveform is to retain its shape, these several harmonic voltages must retain in the output the same amplitude and phase relative to the fundamental that they had in the input. If the high frequencies are not amplified sufficiently, the corners of a square wave will round off (fig. 313②). If the low frequencies are not amplified

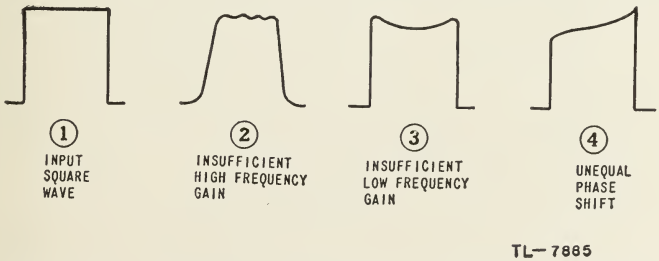

Figure 313. Distortion of square wave by improper amplification.

sufficiently, the top of the square wave will be dished, since the corners are overemphasized as in ③. If the phase shift of all the harmonics is not proportional, the square-wave output will be lopsided, as in ④. Since

most waveforms that are observed are affected by a combination of these factors, a wide variety of waveshapes may be obtained.

b. Input impedance. In order that the oscilloscope will not affect a circuit under investigation, the input impedance to the amplifiers must be as high as possible. In general, the input impedance is of the order 2 to 5 megohms. This value of impedance is generally high enough so that no effect on the circuit under test can be noticed.

c. Attenuator. Frequently, signals of large amplitude must be observed. In this case an attenuator of some sort is required. Great care must be taken with such attenuators if the waveshape is to be preserved faithfully, since stray capacitances may attenuate the high frequencies more than the attenuator proper will cut down the lower frequencies. In addition, a gain control is usually provided for varying the amplitude of the signal applied to the deflection plate. Since the gain control often is capable of reducing the output of the amplifier below the input level, the gain control may also be used as an attenuator.

d. Type 208 vertical deflection amplifier. (1) Figure 314 shows the

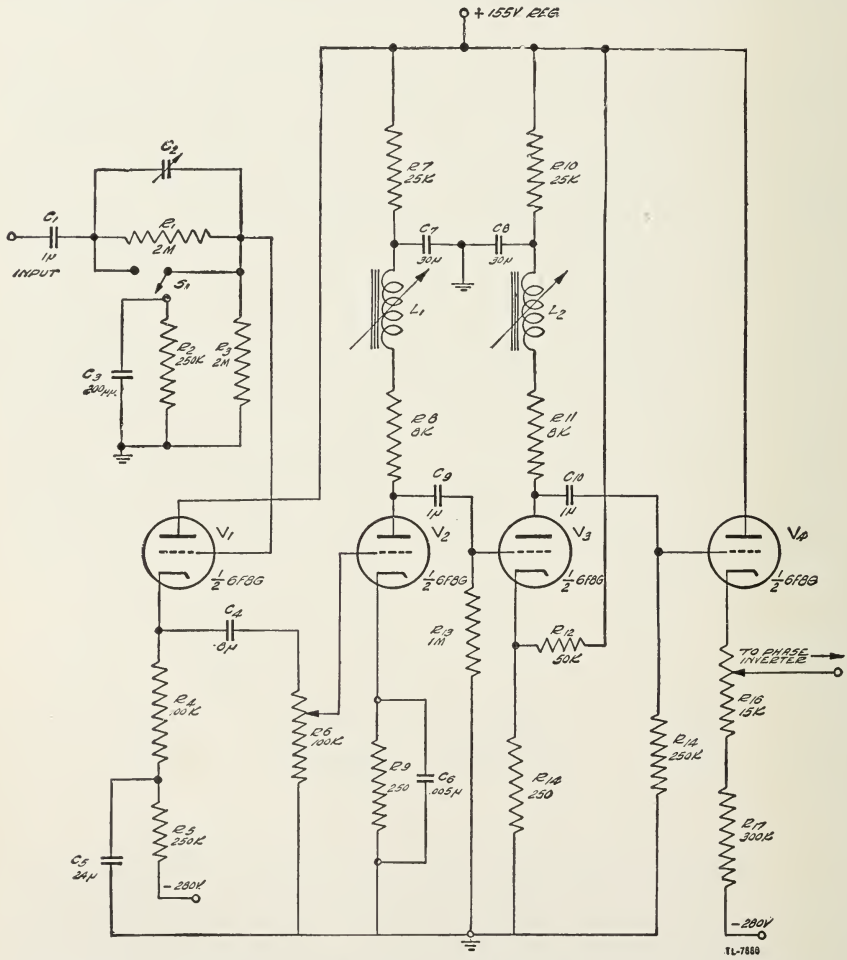

Figure 314. Vertical deflection amplifier from DuMont type 208 oscilloscope.

vertical deflection amplifier from the DuMont cathode-ray oscilloscope. This amplifier is a component of the complete circuit shown in figure 281. The signal is applied to a compensated voltage-divider circuit. This attenuator is so adjusted that when switch S_1 is thrown to the UNDER 250 V RMS position, the stray capacitances and capacitors C_2 and C_3 form a divider which cuts down the signal by the same ratio that the resistance divider does. The resistance voltage divider consists of R_1 in series with R_2 and R_3, which are in parallel. The input resistance to the first stage V_1 is approximately 2 megohms in either position of S_1.

(2) The first stage of the amplifier is the cathode follower V_1. The cathode-follower input stage is used because the input impedance of this type of circuit is very high, and because the danger of distortion, caused by drawing of current by the grid, is minimized. Since the gain of the cathode follower is less than 1, the applied signal appears across R_4 with less amplitude than at the input, but with the same waveshape. However, since the cathode follower is normally conducting, there is a direct voltage at the cathode. The impressed signal causes this voltage to vary. Since all that is needed in the following stage is this varying voltage, capacitor C_4 is used to block out the direct voltage. Capacitor C_4 is large (8 μf) because it is desired to pass the very-low-frequency components of the signal. After the signal passes through C_4, it is impressed on potentiometer R_6. Since the slider on this potentiometer can select any desired fraction of the signal voltage, it serves as the gain control, although strictly speaking it does not alter at all the gain of the amplifier. Instead, it varies the amplitude of the input signal, and thereby controls the amplitude of the output. The advantage of this type of control is that the amplifier may be operated at a fixed point and the most linear part of its characteristic may always be used.

(3) The second and third stages of the vertical deflection amplifier are compensated video amplifiers. In order to make the amplification more nearly uniform over a wide band, plate-load resistors R_8 and R_{11} (8k) are much lower than normally would be used. Inductors L_1 and L_2 are used to compensate for the effect of stray capacitances at high frequencies. Since the reactance of an inductor increases as the frequency increases, the effective plate-load impedance tends to increase at the high frequencies. Therefore, as the frequency applied to V_2 and V_3 becomes higher, the shunting effect of stray capacitances, which tends to reduce the useful gain, is offset by the increasing magnitude of the plate-load impedance. When L_1 and L_2 are properly adjusted, the gain of the two stages will be nearly constant up to 1 megacycle.

(4) At high frequencies, resistors R_7 and R_{10} are bypassed by the low reactance of capacitors C_7 and C_8. At very low frequencies, the gain of the amplifiers is reduced by the loss which occurs in the grid-coupling circuit. The loss is compensated for in this amplifier, however, since at low frequencies the reactance of C_7 and C_8 is high. The plate-load resistors are thus effectively much larger, since a low-frequency voltage developed across R_7 or R_{10} is not bypassed by the capacitors. The gain of the two stages is increased by making the effective plate-load resistance larger. Thus, the attenuation of very-low-frequency voltages in the input circuit is offset by the increased gain. In this manner, the low-frequency response of the amplifier is extended down to nearly 2 cycles per second. Without the use of C_7, C_8, R_7, and R_{10}, the lowest

frequency that would be amplified with the mid-band gain would be approximately 30 cycles per second. In some cases, video amplifiers are direct-coupled in order to extend their low-frequency response all the way down to zero frequency, or direct current.

(5) The output stage of the video amplifier is the cathode follower V_4. The input impedance to a cathode follower is high, and the input capacitance is less than for a conventional amplifier. This low input capacitance makes it possible to extend the high-frequency response of the amplifier, since the shunting effect of the capacitance is minimized. The signal appears across cathode resistors R_{16} and R_{17}. In spite of the fact that R_{17} returns to —280 volts, the current through the cathode resistors is sufficient to make the cathode of V_4 slightly positive with respect to ground, and the grid will not draw any current. The reason for returning R_{17} to —280 volts is to provide a voltage variation across R_{16}. Thus, the lower end is negative with respect to ground, and the upper end is positive. Ground potential must be found somewhere on R_{16} if the position control in this particular circuit is to operate properly. Such a connection would not ordinarily be made if it were not necessary for the operation of some other part of the circuit.

68. POWER SUPPLIES. a. General. To accelerate the electrons in a cathode-ray tube to a high velocity, a high potential must exist between the cathode and the accelerating anode. The electrons which are emitted from the cathode are formed into a beam. Consequently, very few electrons actually strike either anode, and, therefore, only a very small plate current is required from the power supply. Generally, this current is less than 100 microamperes. Because the current drain is so small, a simple power supply is satisfactory.

b. High voltage. One possible form of high-voltage power supply is shown in figure 315. A half-wave rectifier is entirely satisfactory, since the small current drain does not discharge the filter capacitors appreciably. In many applications, the R-C filter, consisting of R_1, C_1, and C_2, is not used. Instead, R_1 and C_1 may be omitted, and the filter will then consist of the single capacitor C_2. Although such a circuit is practical, the filter shown in figure 315 is more effective in removing the ripple from the rectified voltage.

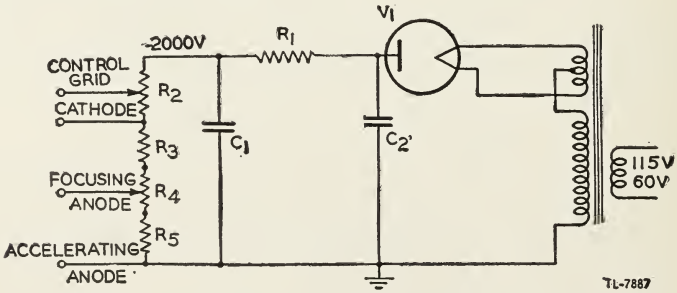

Figure 315. High-voltage power supply for electrostatic cathode-ray oscilloscope.

c. Power supply for electrostatic tubes. (1) A high-voltage power supply for an electrostatic cathode-ray tube generally has a high resistance bleeder. The several voltages required to operate the cathode-ray tube

are taken from this bleeder. It is standard practice to ground the second or accelerating anode, and to make the other elements negative with respect to ground. To prevent defocusing, the deflecting plates should be held at an average potential very close to the voltage on the second anode. It is also desirable that the deflecting plates be at some low potential, in order to avoid any danger from high voltage at the input terminals. Grounding the second anode, therefore, will satisfy both requirements.

(2) Other voltages required in the oscilloscope are provided by power

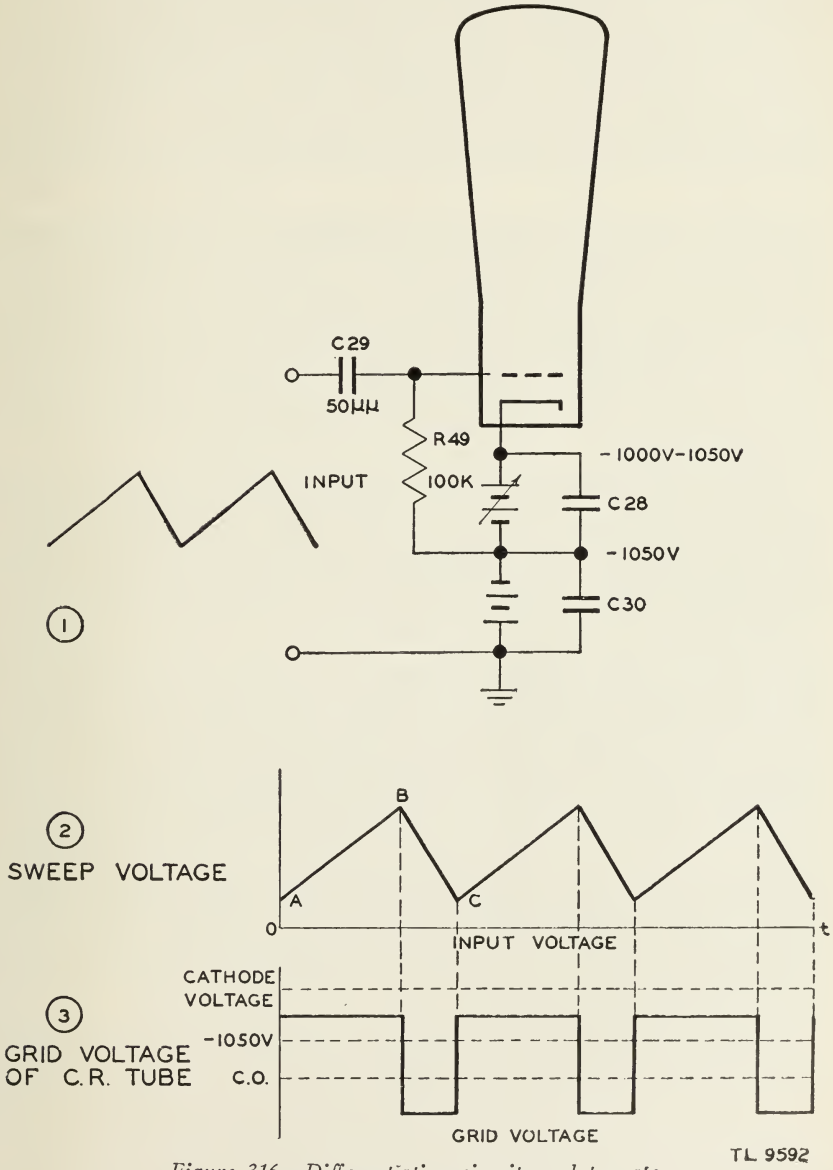

Figure 316. Differentiating circuit used to gate oscilloscope during fly-back.

supplies which are entirely standard. These are described in section V. In some cases, it is desirable to supply plate voltage to the amplifiers from a regulated source, in order that fluctuations in line voltage will not cause movement of the pattern on the screen. The regulated power supplies generally used are similar to those already discussed.

d. Power supply for electromagnetic tubes. In the electromagnetic cathode-ray tube, the current drawn by the accelerating electrodes is of very small magnitude. The power supply used to provide the accelerating voltages, therefore, may be similar to that used with electrostatic tubes. However, since there are no deflecting plates, the second anode (which is usually the acquadag coating on the glass) is made positive with respect to the cathode. Also the magnitude of the accelerating anode voltage is greater in the case of the electromagnetic tube than in the electrostatic, because the tube length is shorter than for the electrostatic tube and a larger acceleration is required therefore to get the electrons up to speed.

69. OSCILLOSCOPE GATING. a. Gating by differentiating sweep. (1) When a sawtooth sweep is used for observing waveforms, it is undesirable to see the return trace. It is true that this return trace is swept very quickly across the screen, and generally will not be very bright. However, when the intensity is adjusted so that the forward trace is very bright, the return trace may be annoying. The voltage on the control grid of the cathode-ray tube is, therefore, reduced during the fly-back time to prevent electrons from striking the screen during this short interval.

(2) This may be accomplished by passing the sawtooth wave through a peaking or differentiating circuit, as in the oscilloscope shown in figure 281. The differentiating circuit (fig. 281) consists of the 50-micromicrofarad capacitor C_{29} and the 100-kilohm resistor R_{49}. This circuit is also shown in figure 316 to explain the method of driving the grid negative during the fly-back time. Capacitors C_{28} and C_{30} are bypass capacitors, and have little or no effect on the differentiated waveshape. As explained in section III, a differentiated sawtooth is a rectangular wave. The linear change of voltage of the sawtooth makes C_{29} charge with a constant current. This current, in flowing through R_{49}, produces a voltage drop of which the magnitude and polarity are proportional to the magnitude and direction of the charging current. For example, in figure 316, C_{29} is charging slowly from A to B, and a small constant voltage appears on the grid of the *CRT*. From B to C, capacitor C_{29} is discharging rapidly and a much more negative voltage appears on the grid. Since the lower end of R_{49} is at —1050 volts, the average voltage of the rectangular wave is equal to this voltage. The value of C_{29} and R_{49} are so chosen that the grid voltage never equals the cathode potential, but during the rapid back trace from B to C, the grid voltage is sufficiently negative to cut off the electron stream.

b. Intensity Modulation. (1) In other oscilloscopes for special purposes, it is sometimes desired to operate the grid at such a potential that the trace normally does not appear on the screen. Thus, a sweep of very short duration is sometimes used, and in order to make the trace visible, a positive square pulse of voltage is applied to the control grid. This pulse rises to a voltage sufficient to allow electrons to flow in the beam at the same instant that the sweep starts, and the voltage falls

back when the end of the sweep is reached. This application of a gate voltage is often called *intensification*, because the intensity of the trace is increased during the sweep.

(2) Since it is the bias on grid—that is the voltage difference between grid and cathode—that determines the intensity of the trace for any fixed value of accelerating voltage, it is obvious that gating can be accomplished by applying either a negative pulse to the grid, or a positive pulse to the cathode. Thus the same effect may be obtained in a cathode-ray tube either by varying the cathode voltage with the grid voltage fixed, or by varying the grid voltage with the cathode voltage fixed. It is sometimes desirable to use intensity modulation for a definite length of time. In such cases, a negative pulse (gate) of the desired duration is applied to the cathode in order to reduce the bias to the point where the intensity modulation signals on the grid will be able to control the brightness of the trace that appears. This type of operation is sometimes used in radar indicators.

70. OBSERVATION OF WAVEFORMS. a. General. (1) The cathode-ray oscilloscope is most generally used in the observation of waveforms in electrical circuits. Since it is the voltage waveshape that is commonly required, the electrostatic cathode-ray tube is used in test oscilloscopes. The electromagnetic cathode-ray tube is a current-operated device. It is used for certain applications other than general testing where its properties make it more suitable than the electrostatic tube.

(2) In order to obtain an accurate representation of the voltage waveform, a few precautions must be observed. For the protection of both the operator and the oscilloscope, the approximate magnitude of the voltages in the circuit under test must be known. Dependable data can be obtained from the oscilloscope only if its sensitivity and its frequency characteristics are known. To make certain that the waveform will not be distorted, it is essential that the manner in which distortion takes place be understood and that precautions be taken to minimize such distortion.

b. Input circuit. The input to most oscilloscopes is between an input terminal and ground. The input terminal is almost always coupled to the grid of the amplifier through a capacitor. The capacitors used seldom have voltage ratings in excess of 450 volts. Unless the approximate magnitude of the voltage under test is known, therefore, damage to the oscilloscope through breakdown of the input capacitor may easily result.

c. Voltage dividers. (1) In some cases, it may be necessary to observe waveforms in circuits where the voltage is much greater than the components within the oscilloscope can withstand. A voltage divider may be used in such instances to reduce the voltage to a value that will not damage the equipment. In any case, however, it is very important that the oscilloscope be adequately grounded. Grounding the oscilloscope is a precaution that must be taken for the protection of the operator, since a failure of some part of the voltage divider can raise the potential of the whole oscilloscope to a dangerous level if the case is not solidly connected to ground.

(2) If the voltage divider used is a capacitance divider, a wise precaution is to shunt each capacitor with a high resistance, in order to maintain the proper voltage distribution across the chain. In figure 317①

and ②, two voltage dividers are shown. In figure 317①, the voltage across C_2 is one-tenth of the voltage across C_1, owing to the capacitance alone. However, the leakage resistances R_1 and R_2 may be of such values that they divide the voltage by a very different ratio. If this is true, the voltage distribution across the capacitors will be upset, and one of them may break down. To prevent this unbalanced distribution of volt-

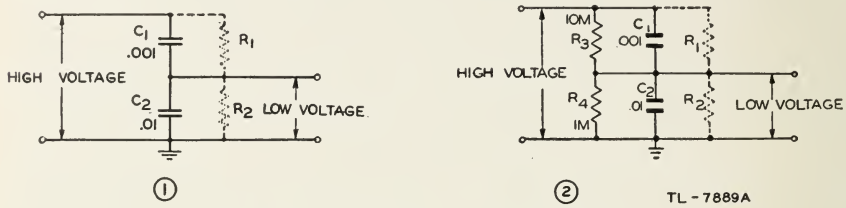

Figure 317. Capacitance voltage divider.

age, resistors R_3 and R_4 may be added, as in figure 317②. Since the leakage resistance of a good capacitor is of the order of 1,000 megohms, R_3 and R_4 fix the voltage division at the same ratio as do the capacitors, and the voltage divider may be easily designed to withstand the high voltage.

d. Frequency ranges. The range of sweep frequencies in a given oscilloscope is usually indicated directly on the front panel of the instrument. The frequency range that the vertical and horizontal amplifiers are capable of amplifying properly is given in the manufacturer's instruction book. As a rule, only the best oscilloscopes use amplifiers which will amplify voltages whose frequency is below 20 cycles per second or above 100,000 cycles per second. Such instruments are satisfactory for most uses, but distortion is likely to occur when sawtooth or rectangular waveshapes of a high recurrence rate are investigated. High-grade oscilloscopes are capable of amplifying over a broader frequency range, and they may, therefore, be used on rectangular and sawtooth waveshapes of high recurrence rates without distorting the shape of the waveform.

e. Deflection sensitivity. (1) The deflection sensitivity of an oscilloscope may be defined as the distance in millimeters that the spot is moved on the screen when 1 volt is applied to the deflecting plates, expressed in millimeters per volt. The most accurate way of measuring this quantity is to apply a known d-c potential directly to the deflecting plates and to measure the distance that the spot is moved by this voltage. The number of millimeters that the spot moves, divided by the voltage applied, is the deflection sensitivity. Most electrostatic cathode-ray tubes have sensitivities which are less than 1 millimeter per volt. This same figure may be expressed in terms of the voltage required to move the spot 1 inch. To convert from millimeters per volt to volts per inch, divide 25.4 by the sensitivity in millimeters per volt.

(2) When it is desired to use the amplifier with the oscilloscope, the gain of the amplifier must be calibrated. However, a more direct procedure is to set the gain control to a value that is satisfactory, apply sine-wave voltage to the input terminal, and measure the amplitude of the deflection on the screen. The magnitude of the input sine-wave voltage may be measured with an accurate a-c voltmeter. Most a-c voltmeters indicate the root-mean-square (rms) value of voltage, but the deflection of the spot

on the screen is proportional to the peak voltage of the sine wave. The total height of the image on the screen is proportional to the amplitude of the sine wave from the positive peak to the negative peak (peak-to-peak voltage). To convert the rms voltage to peak-to-peak voltage, therefore, the meter reading must be multiplied by 2.828. Thus, the effective sensitivity of the oscilloscope in volts per inch is the peak-to-peak voltage applied divided by the peak-to-peak amplitude of the trace. If the gain control is changed, the effective sensitivity will also change. It must be remembered that the sensitivity of the cathode-ray tube is not affected by the use of the amplifier. The only factor changed is the amplitude of the voltage applied to the deflecting plates.

f. Stray pick-up. In order to avoid pick-up of stray signals, the leads from the circuit under test to the oscilloscope should be as short as possible. If the leads are long, a greater voltage can be induced in them by any stray field which may be present than if they are short. The pick-up may be so disturbing in some cases that it will be almost impossible to use the oscilloscope. A few things can be done to reduce the effect on the oscilloscope of stray fields: First, the cathode-ray tube itself must be very carefully shielded from all stray fields. In most cases, this shielding is provided by the aquadag within the tube and by a metallic shield outside the tube. Second, the common side of the oscilloscope circuit should be connected to a ground point in the circuit under test and to a good external ground connection. This connection will aid in eliminating most of the stray voltages that are picked up by the leads. Third, a low-capacitance coaxial cable may be used to reduce still more the effect of stray fields.

g. Distortion. (1) Several sources of distortion are possible in observing waveforms. While distortion can be eliminated by simple precautions in some cases, it is very difficult to eliminate in other cases.

(2) Perhaps the most obvious point at which distortion can enter is in the deflection amplifier. It is important, therefore, to know the frequency response of the amplifier being used, so that an estimate may be made of the possibility of distortion for a given signal.

(3) If the sweep is nonlinear, the shape of the wave on the screen will not be a true picture of the voltage under test. However, if the oscilloscope is not defective, the sweep will generally be linear enough for most purposes.

(4) When signals of relatively high frequency are to be observed, the time of fly-back may become an appreciable fraction of the period of the signal. To avoid distortion from this source, it is well to adjust the sweep frequency so that several cycles of the signal appear on the screen.

(5) If the magnitude of the synchronizing voltage is too great, the image may be distorted by the fact that the sweep is terminated too soon. This may be avoided most simply by setting the synchronization control to zero while the sweep frequency is adjusted. When the sweep frequency is as nearly as possible some integral submultiple of the signal frequency, the image will be almost stationary on the screen. The synchronizing voltage should then be turned up just enough to stop the apparent motion of the image on the screen.

(6) In general the input impedance of the oscilloscope will be much higher than the impedance at the point under test. The oscilloscope will

not, therefore, change the time constant nor the voltage at the point, and a true picture of the voltage may be observed. In some circuits, however, the impedance is very high (up to 100 megohms), and the oscilloscope will change the voltage or the time constant so radically that it will be very difficult to obtain a true picture.

(7) The input capacitance of an oscilloscope is generally small (of the order of 20-60 micromicrofarads), but it may be sufficient to alter the characteristics of a video amplifier or the tuning of a high-frequency oscillator.

(8) When one specific type of equipment is to be maintained, many of these sources of distortion become meaningless. When, for example, the same oscilloscope is used with the same pair of leads to check a given set of waveshapes, the distortion will always be the same. If the waveshapes through the system are recorded when the system is working properly, the maintenance testing need consist only of a comparison of the waveshapes obtained with the recorded standard waveshapes. In such a case, it is not necessary to eliminate all distortion, because the test will consist of a comparison of two sets of data that are distorted in the same way. It is desirable to eliminate distortion as much as possible in order that the operation of the circuit under test may be better understood. However, successful testing may be performed regardless of distortion, if the same test equipment is used in the same way in every check.

71. OSCILLOSCOPE AS MEASURING DEVICE. a. D-c voltmeter. The electrostatic cathode-ray tube is a voltage-operated device. The amount of deflection of the spot is proportional to the magnitude of the voltage applied to the deflecting plates. If the deflection sensitivity of the cathode-ray tube is known, the oscilloscope can be used as a voltmeter on either direct or alternating voltages. The oscilloscope has the advantage of extremely high input impedance when the voltage to be measured is applied directly to the deflecting plates. However, since both the range of voltage and the accuracy of indication are less than that available in commercial d-c voltmeters, the oscilloscope is not widely used for measurement of direct voltage.

b. A-c voltmeter. The cathode-ray oscilloscope is a better device for measuring alternating voltages than most conventional a-c voltmeters. The principal difficulty with the oscilloscope is the calibration of its deflection sensitivity. If this factor can be determined accurately, the magnitude of an alternating voltage can be determined very simply. The advantages of the oscilloscope as an a-c voltmeter are its very high input impedance, its ability to measure equally well voltages of a very wide frequency range, and its ability to indicate magnitude regardless of waveform. The oscilloscope measures the peak value of the a-c voltage applied. The standard a-c meters show the rms value of a sine-wave a-c voltage, which may be converted to a peak value, but the results may be very misleading for voltages whose waveforms are other than sinusoidal.

c. Ammeter. The electromagnetic cathode-ray tube is a current-operated device. It could be used, therefore, to measure current magnitudes directly if it were calibrated. This type of tube, however, is rarely used in test oscilloscopes. The electrostatic cathode-ray tube, on the other hand, is widely used in test oscilloscopes, and may be used to measure currents indirectly. If the current to be measured is passed through a calibrated resistor, the resulting voltage across the resistor may be indicated on the

oscilloscope screen. By application of Ohm's Law, the current may be calculated. That is, R is known, E is measured, and I can be calculated by the expression $I = \frac{E}{R}$.

d. Wattmeter. The same method that is used to measure current can also be employed to measure power. It is known that the power dissipated

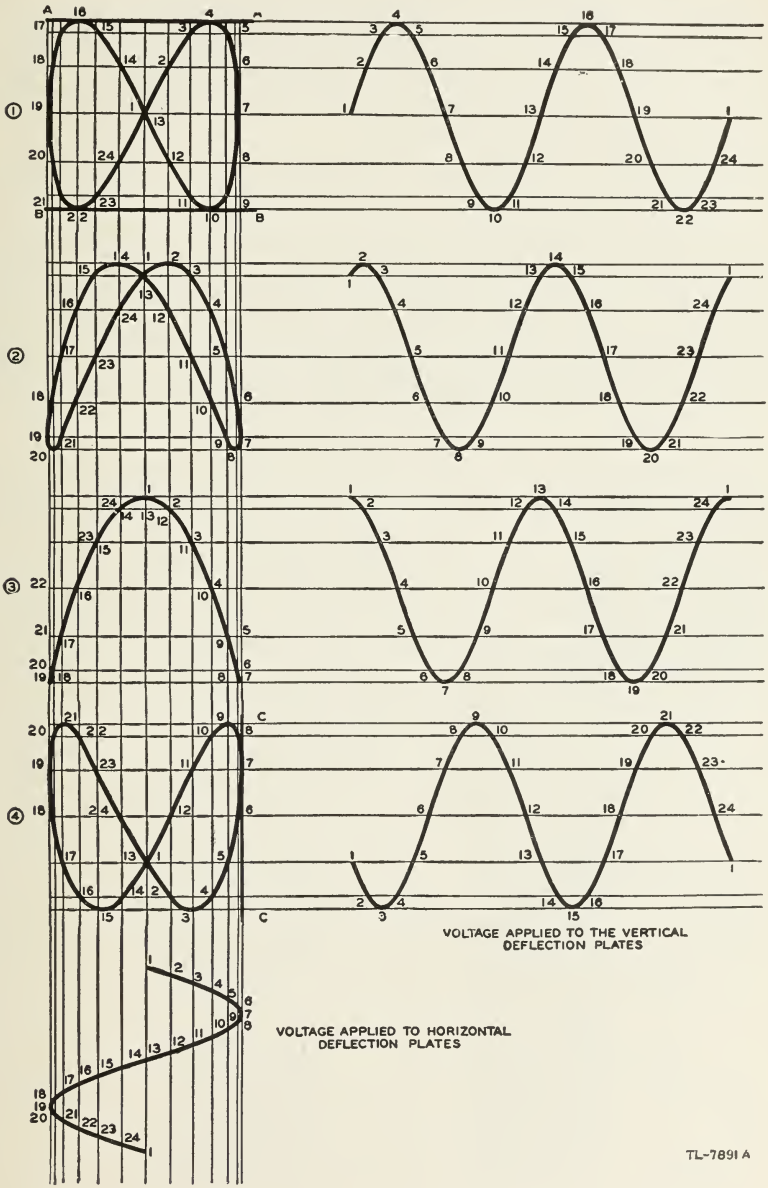

Figure 318. Lissajous figure for 1:2 frequency ratio.

in a resistor is equal to the product of the current through the resistor and the voltage across it ($E \times I$). The power dissipated in the resistor may therefore be expressed as $P = EI = \frac{E^2}{R}$, and by substituting in this expression the voltage measured by the oscilloscope, the power may be calculated.

72. LISSAJOUS FIGURES. a. General. A Lissajous figure is a pattern created on an oscilloscope screen when sine-wave voltages are applied to both the horizontal and vertical deflecting plates. One type of Lissajous figure, the circle, has already been discussed. The principal use of the Lissajous figure is in the determination of an unknown frequency by comparison with a standard frequency.

b. Development of simple figure. The development of one type of Lissajous figure is shown in figure 318. The ratio of the frequencies applied to the two plates is 1:2. It does not matter what the actual frequency is. The important point is that the frequency on the vertical deflecting plates is twice that on the horizontal deflecting plates. If the two voltages are in phase—that is, if both voltages are passing through zero and going positive at the same instant—a figure-eight pattern will be traced (fig. 318①). As the phase changes slightly, the pattern will change as shown in ②, ③, and ④. When the phase angle is 90°, the loops close, as in

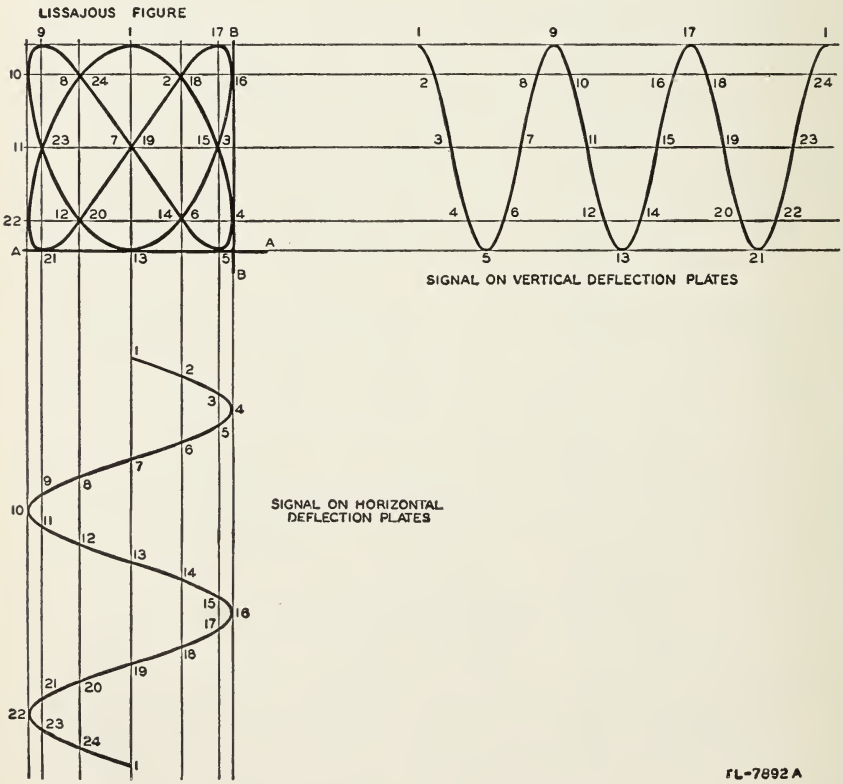

Figure 319. Lissajous figure for 2:3 ratio.

③. If the phase angle is greater than 180°, the patterns will be inverted, as in ④.

c. Interpretation of pattern. (1) One feature that all these possible images have in common is that the horizontal line *A–A* or *B–B* (fig. 318①) will touch the pattern at two points. This is true even for the line tangent to the top of ③, because the trace passes the point 1 on the figure twice during each cycle. Likewise, a vertical line, such as *C–C* in ④, will touch the pattern at only one point. It is from these points of tangency that the ratio of the two frequencies may be obtained. The means of determining the ratio of the frequencies may then be stated as

$$\frac{\text{Frequency applied to horizontal deflection plates.}}{\text{Frequency applied to vertical deflection plates.}} = \frac{\text{Number of points at which the figure is tangent to a vertical line.}}{\text{Number of points at which the figure is tangent to a horizontal line.}}$$

(2) In figure 319, the ratio of the two frequencies is found by noting that the figure touches the vertical line *B–B* at the two points 4 and 16, and that it touches the horizontal line *A–A* at the three points, 5, 13, and 21. The ratio, therefore, is 2:3. If the frequency of the voltage applied to the vertical deflecting plates is 300 cycles per second, the frequency of the voltage applied to the horizontal deflecting plates may be found from the simple proportion given above:

$$f_V = 300 \text{ cycles per second}$$

$$\frac{f_H}{f_V} = \frac{2}{3}$$

$$f_H = \frac{2}{3} f_V = \frac{2}{3} \times 300 = 200 \text{ cycles per second}$$

d. Miscellaneous figures. In figure 320 several varieties of Lissajous

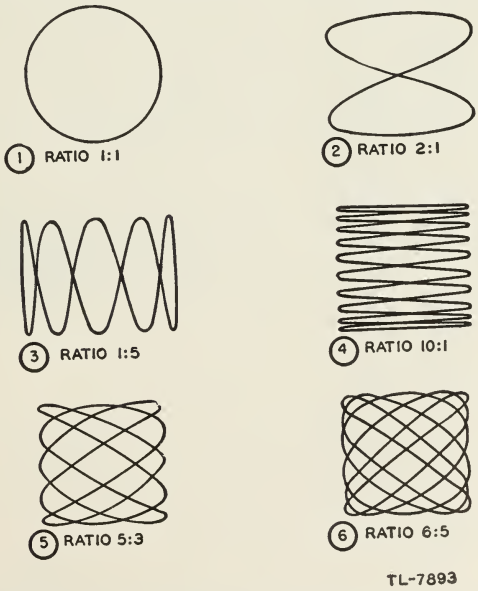

Figure 320. Lissajous figures for various ratios.

figures are shown. The ratio is indicated in each case. Unless the oscilloscope screen is very large, ratios higher than 10:1 are difficult to interpret. The circle shown at figure 320① is the simplest type of Lissajous figure. The pattern at ② is for a 2:1 ratio. Compare this with the pattern shown

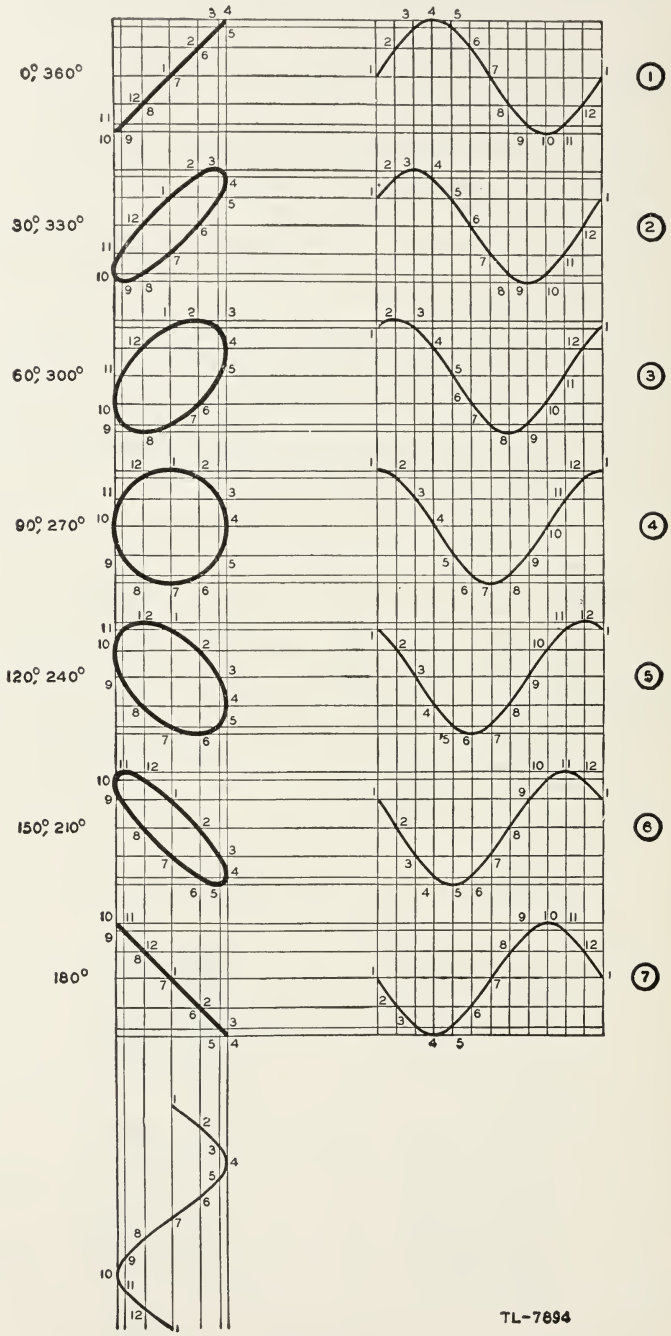

Figure 321. Lissajous figures which indicate phase difference.

in figure 318. The patterns in ⑤ and ⑥ indicate the complexity that may be encountered in ratios of a higher order.

e. Indication of phase angle. The circle of figure 319① is formed by applying to the deflecting plates sine-wave voltages of the same frequency and amplitude, but with a phase difference between them of 90°. Figure 295 illustrates the effect of varying the phase of the voltage applied to one of the deflecting plates. It can be seen at ① that the resultant trace is a line at a 45° angle when the voltages are exactly in phase. As the phase angle is made greater, the straight line opens into a broadening ellipse, as at ②. When the phase difference is 90°, the ellipse becomes a circle, as at ④. As the phase difference is increased beyond 90°, the circle begins to collapse toward another straight line, but this time the line is at 135°.

f. Effect of unequal amplitudes. The patterns shown in figure 321 can be obtained only if the amplitude of the voltage applied to the vertical deflecting plates is the same as the amplitude of the voltage applied to the horizontal deflecting plates. If one voltage is greater than the other, the pattern will never become circular, but always will be elliptical. If such patterns are to be used to measure the phase difference between two sine-wave voltages, care must be taken to insure that both voltages are of the same amplitude, so that the screen can be calibrated.

73. MEASUREMENT OF SHORT TIME INTERVALS. a. Linear time base. When it is required to measure time intervals by means of an oscilloscope, it is desirable for the spot to move a uniform distance along the screen during each interval. If such motion of the spot can be obtained, the trace may be very simply calibrated with a linear scale, and the accuracy of measurement will be the same at all parts of the sweep. However, if the motion is not uniform, the accuracy of measurement will vary. A nonlinear sweep may be very useful for some applications.

b. Sawtooth sweep. (1) The most widely used operation of an oscilloscope for measuring time intervals is that in which the signals to be timed are put on the vertical deflecting plates, and a sawtooth voltage is put on the horizontal deflecting plates. The sawtooth voltage is so designed that the spot will travel across the screen linearly with time. The length of the trace will be proportional to the maximum time interval to be

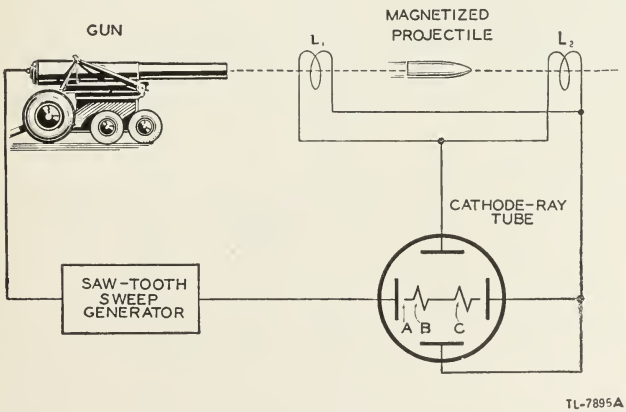

Figure 322. Use of oscilloscope to measure velocity of projectiles.

measured. The time interval will be shown on the oscilloscope by the distance between two vertical deflections on the horizontal trace.

(2) An application of this method of measuring time is found in measuring the speed of projectiles. A circuit which may be used for this purpose is shown in figure 322. In order that the measurement may be made more accurately, the sweep generator is triggered by the firing of the gun. In this way, the sweep is made to start before the shell leaves the muzzle of the gun (point *A*, fig. 322). The gun is aimed so that the projectile will pass through two coils L_1 and L_2. If the shell is magnetized, it will induce a voltage in the coils as it passes through them. The time required for the projectile to go from L_1 to L_2 is indicated on the screen by the distance between the two pips at *B* and *C*. If the distance between L_1 and L_2 is known, the velocity of the shell may be calculated since the time is obtained from the oscilloscopes. A more direct measurement could be made by directly calibrating the sweep in terms of the velocity. This is possible, since the distance between L_1 and L_2 can be fixed, and the speed of the sweep is known. Thus, all calculation can be made before the measurement is made, and the results put directly into the calibration of the sweep. Because the pips occur on the screen only once, it is necessary to photograph the trace to permit measurement.

c. Synchroscope. (1) An oscilloscope which has a sweep of very short duration, generated only when a synchronizing signal is provided, is called a synchroscope. Synchroscopes have several calibrated sweeps, which are approximately 50 microseconds, 200 microseconds, and 1,000 microseconds in duration. Such instruments are useful in observing the shape of very short pulse voltages. They may also be used to measure the duration of pulses or the time between two pulses. The sweep may be synchronized from an external source or from an internal oscillator.

(2) In general, an oscilloscope with a fast sweep, or a synchroscope, will have a sweep voltage of the kind shown in figure 323①. The voltage rises very quickly to its maximum value along the line *A-B*, which may be as short as 50 microseconds, as shown. In order that the very swiftly moving spot may produce a visible trace on the screen during this very short time, a positive gate pulse of the same duration as the sweep is applied to the grid to increase the number of electrons that

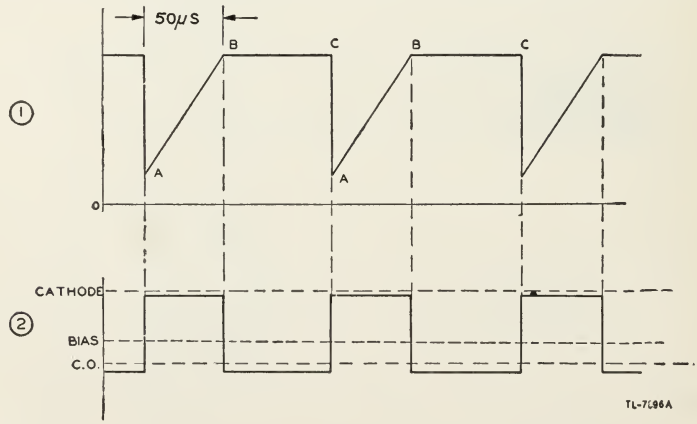

Figure 323. Sweep voltage and gate voltage for synchroscope.

flow in the cathode-ray beam. During the time BC, the spot does not move. Unless the grid potential were reduced by the trailing edge of the gate pulse, a very bright spot would appear at the right-hand end of the trace, and the screen might be damaged at this point.

d. Expanded sweeps. For accurate measurement of time intervals, it is desirable to extend the sweep, which may also be called a time base, so that a longer line will represent the same interval of time as the single straight line considered before. Obviously, the time base can be extended by using a large cathode-ray tube, but tubes which have screens larger in diameter than 7 inches are rather awkward in size. Various means, therefore, are employed to produce a longer trace on the more convenient sizes of cathode-ray tubes.

(1) One way of producing a longer time-base line on a given oscilloscope screen is to trace a circular line around the screen instead of a single straight line across it. The circular trace is approximately three times longer than the single straight trace, so that a given time interval is shown by an arc three times longer. This permits a more accurate measurement of the time interval. For some applications, a spiral trace will extend the accuracy of time-interval measurement well beyond the accuracy possible with a single straight trace. This is especially useful with relatively long time intervals which must be measured with great accuracy.

(2) Another simple way of extending the length of the time base is to make the trace double back on itself, and to separate the forward and backward traces. This can be done simply by applying waveforms of the type shown in figure 324. At the instant A, the spot is pulled up by the square wave on the vertical deflecting plates to the point A

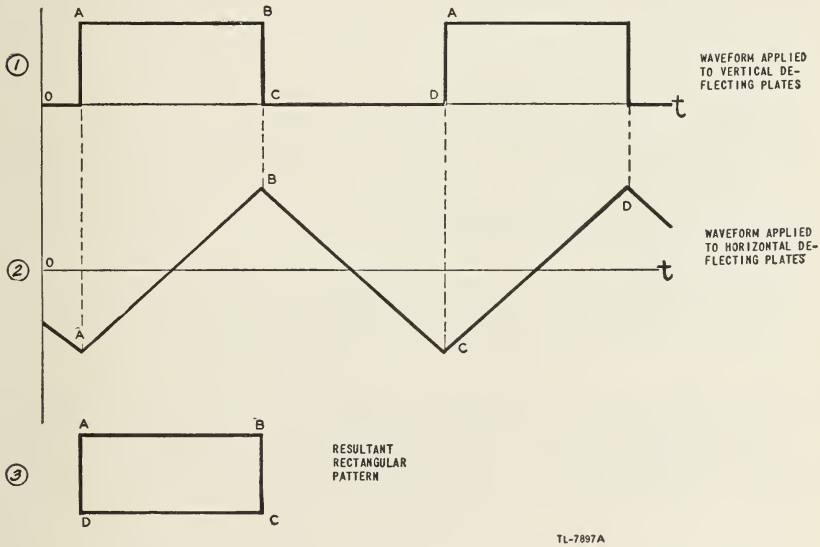

Figure 324. Rectangular pattern used to extend length of time base.

in figure 324③. The spot moves linearly from A to B as the voltage increases on the horizontal deflecting plates. When the spot arrives at B, it is pulled down to C by the decrease in voltage on the vertical deflecting

plates. At the same instant, the voltage on the horizontal deflecting plates begins to decrease at a linear rate, and the spot retreats from *C* toward *D*. At *D*, the voltage on the vertical deflecting plates is suddenly increased, and the spot jumps to point *A*, having traced a rectangle. The rectangle doubles the length of the trace and, therefore, permits greater accuracy in the measurement of time intervals.

(3) A third method of increasing the length of the time base is the use of the "zig-zag" trace. By this method, 10 or more horizontal lines can be traced, and high accuracy of time measurement is possible for long time intervals.

e. Time-base calibration. When the sweep on an oscilloscope is to be used as a time base, it must be calibrated if the measurement of time intervals is to be made accurately. Calibration is frequently accomplished by applying the output of a shock-excited oscillator to the vertical deflecting plates. The oscillations are produced in this oscillator by the same pulse which initiates the sweep. The sine waves produced divide the time base into intervals equal to the period of one cycle. To make this calibration more precise, the sine waves are sometimes shaped into sharp pulses which may be applied to the deflecting plates to produce pips, or to the grid of the cathode-ray tube to produce equally spaced bright spots.

74. USES OF CATHODE-RAY OSCILLOSCOPES. a. The principal applications of cathode-ray oscilloscopes are as follows (these four fields of application may be further subdivided for specialized uses of this versatile instrument):

(1) Observation of waveforms in electrical circuits.

(2) Measurement of electrical quantities, such as voltage, current, power, and phase angle.

(3) Comparison of an unknown frequency with a known standard as a means of measuring frequency.

(4) Measurement of short time intervals.

b. Among the specialized applications, the following may be listed as outstanding:

(1) Alignment of tuned circuits for audio frequencies, intermediate frequencies, and radio frequencies.

(2) Television.

(3) Indication of the extent of modulation of a radio transmitter.

(4) Rapid testing of the characteristics of vacuum tubes.

(5) Rapid testing of the hysteresis characteristics of magnetic materials.

c. These applications are fully discussed in textbooks and technical magazine articles. The field of use of this device is so large, and is increasing so rapidly that it is impossible to list all its possible applications.

SECTION X

TRANSMISSION LINES

---

75. GENERAL. a. Introduction. (1) The term *transmission line* is applied to a line which is employed to conduct or guide electrical energy from one point to another. In the earlier days of radio development, radio engineers had little interest in these lines while power and telephone engineers made wide use of them. However, the rapid progress of radio, and particularly of equipment operating at high frequencies, led to a wider application of transmission-line principles to radio circuits.

(2) One of the most important applications of transmission lines is in conjunction with antenna systems, since all antennas are coupled or matched to the transmitters by means of transmission lines. In addition, the more complex antenna systems employ such lines to establish proper phase relations between the various elements of the antenna arrays. Most ultra-high-frequency circuits also make use of transmission lines as circuit elements.

(3) Although transmission lines may be designed and constructed to conduct electrical energy of any frequency, the following discussion deals with radio-frequency transmission lines, except when other types must be discussed for the purpose of developing the theory.

b. Terminology. Any transmission line has two ends—the end to which power is applied and the end at which it is received. The first is called in this discussion the *input end* or *generator end*, and the second the *output end or load end.* Certain texts refer to these by other names such as source, or sending end, and sink, or receiving end. These terms are avoided here to prevent confusion.

76. IMPEDANCE OF A TRANSMISSION LINE. a. Lumped and distributed constants. (1) When a transmission line is short as compared to the length of the radio waves which it carries, the opposition to a voltage applied to the input terminals is chiefly at the load, with a small amount of voltage used in overcoming the resistance of the line. When the line is long, however, as compared to the length of a wave, and if the load is not of a certain correct value, the voltages necessary to drive given amounts of current or power over the line may be greatly different than can be accounted for by the impedance of the load in series with the resistance of the line. The line has other properties besides resistance, then, which create this effect of increased or decreased input impedance. These

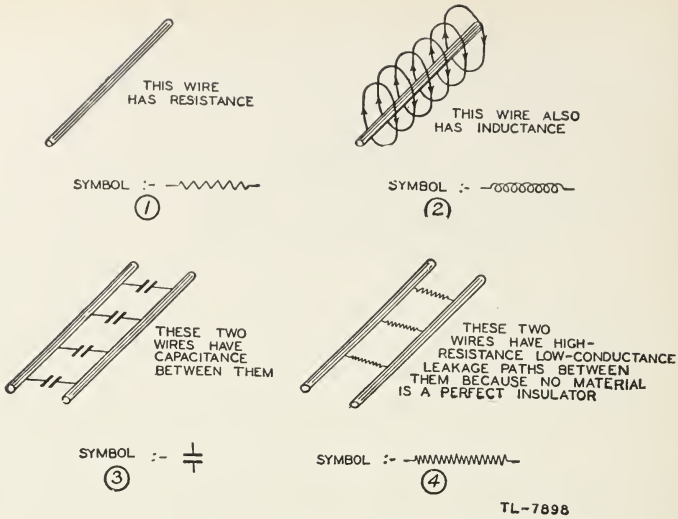

Figure 325. Wires as circuit elements.

properties are inductance in series with the line, capacitance across the line, resistance leakage paths across the line, and certain radiation losses.

(2) In ordinary circuits using coils and capacitors, inductance and capacitance are present in definite "lumps." In the r-f transmission line, however, these quantities are distributed throughout the entire line and cannot be separated from each other.

(3) Figure 325① shows a short wire which has electrical resistance. This resistance can be expressed as ohms per foot, as ohms per mile, or in other ways, depending on the size of the circuit under consideration.

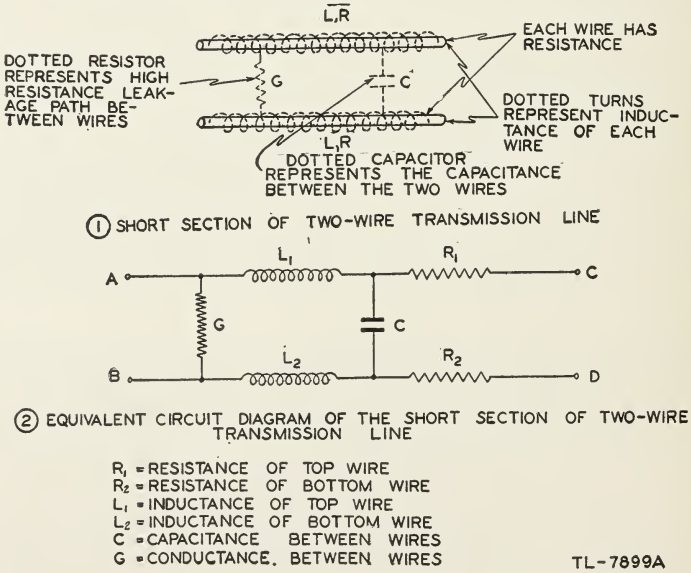

Figure 326. Circuit equivalent of short section of two-wire transmission line.

(4) Figure 325② shows the same short wire which also has inductance. A current in the wire sets up magnetic lines of force which encircle the wire. This magnetic field contains a certain amount of energy which upon the collapse of the field is returned to the circuit to keep the current flowing a little longer. This property of inductance can be expressed in microhenrys per foot, in millihenrys per mile, or in some other convenient way based on the henry as the standard unit of inductance.

(5) Figure 325③ shows two short wires which act as plates of a capacitor when they are placed near each other, with the air or any other insulating material between them acting as the dielectric. The capacitance usually is expressed in micromicrofarads per foot or microfarads per mile.

(6) Figure 325④ shows two short wires which have a certain number of current leakage paths between them. These paths exist because no insulator, even air, is perfect, and therefore a certain insulation resistance exists between wires. For convenience in working out problems dealing with longer lines, this property usually is expressed as the reciprocal of resistance or as conductance. The conductance usually is stated as micromicromhos per foot or micromhos per mile.

(7) Figure 326① shows these properties of resistance, inductance, capacitance, and conductance combined in a short section of a two-wire transmission line. Actually, the diagram does not represent a real transmission line exactly, since it shows the evenly distributed capacitance as a single lumped capacitor and the distributed conductance as a lumped leakage path. However, if the section is very short compared to the total length of line as measured in wave lengths, this approximation is close enough for practical purposes. Figure 326② shows all four properties lumped by conventional symbols.

b. Characteristic impedance and infinite line. (1) Several of these short sections can be combined into a longer length of transmission line (figs

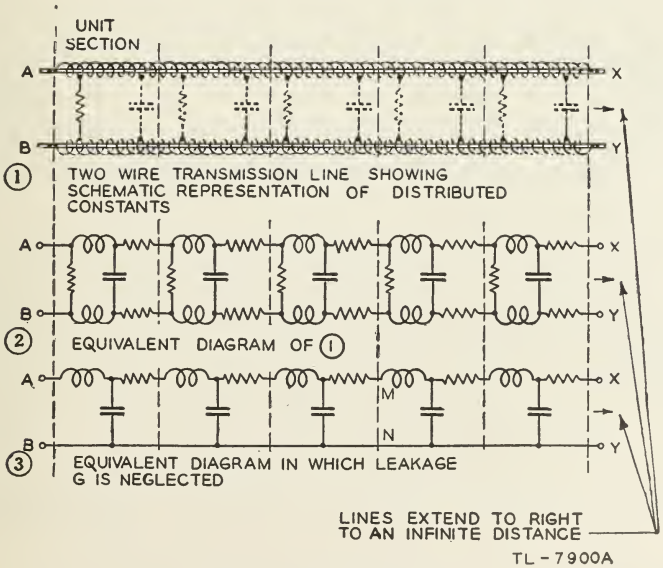

Figure 327. The infinite line.

327① and ②. In many cases the effect of the conductance G is very small compared to that produced by the inductance L and capacitance C and is therefore frequently neglected. Even the line resistance R often is omitted in actual calculations in which the effect of L and C is relatively much greater. In figure 327③ only G is omitted and L and R are treated as if they are all in one line, but the same result is obtained in working out transmission problems. The circuits shown in diagrams ② and ③ give results comparable to a true transmission line, providing the sections are very small compared to a wavelength and are sufficiently numerous.

(2) Obviously some current flows if some voltage is applied across the input terminals A and B in figure 327. In fact any circuit, such as that represented in figure 327① for example, has a certain current flow at some definite applied voltage. The ratio of the voltage to the current is the impedance Z; that is, $Z = \frac{E}{I}$. The impedance presented to the input terminals of a transmission line is not merely the resistance of the wire in series with the impedance of the load; the effects of series inductance and shunt capacitance on the line itself may overshadow the resistance and even the load as far as the input terminals are concerned.

(3) To find the input impedance of a transmission line, the impedance of a single section in figure 326② is determined. This impedance, between terminals AB, can be calculated by the use of series-parallel impedance formulas, provided that the impedance across CD is known. But since this section is merely one small part of a longer line, another similar section is across terminals CD. Again the impedance at AB of the two sections can be calculated provided the impedance of the third section is known. This process of adding one section after another can be carried on and on. With the addition of each section the impedance at AB has a new and lower value. However, after many sections have been added, each successive added section has less and less effect on

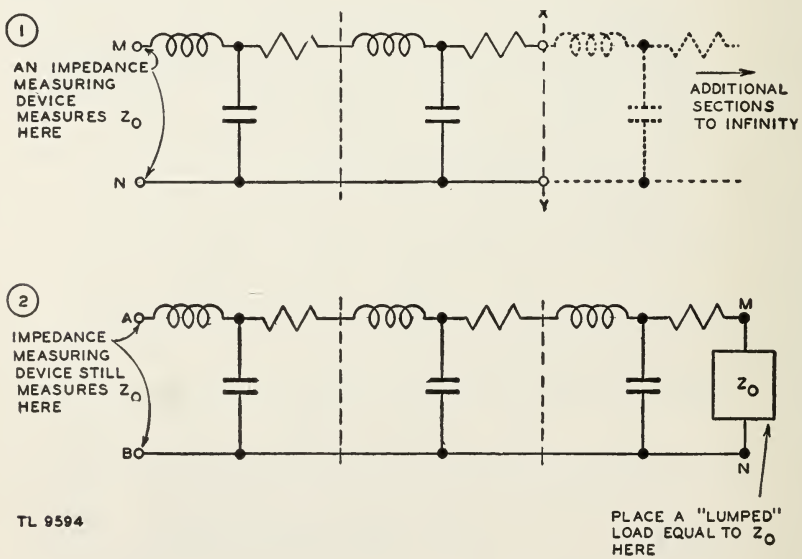

Figure 328. Characteristic impedance of the infinite line.

the impedance at AB. If sections are added to the line endlessly the line is infinitely long and a certain definite value of impedance across AB is finally reached.

(4) For example, it may be assumed that the sections of figure 327③ continue to the right with an infinite number of sections. The impedance appearing across AB is Z_o, when an infinite number of sections extends to the right. Now if the line is cut at MN, an infinite number of sections still extends to the right, since the line is endless in that direction. Therefore the impedance appearing now at MN is also Z_o (fig. 328①). Then if the first three sections are taken by themselves (fig. 328②) and a load impedance of Z_o connected across MN, the impedance across the input terminals AB is still Z_o.

(5) This impedance across the input of a theoretically infinite line has a very valuable use. If a load equal to this impedance can be placed on the output end of any short or convenient length of line, the same impedance appears at the input terminals of the line. Only one value of impedance for any particular type and size of line acts in this way. This value is called the *characteristic impedance.*

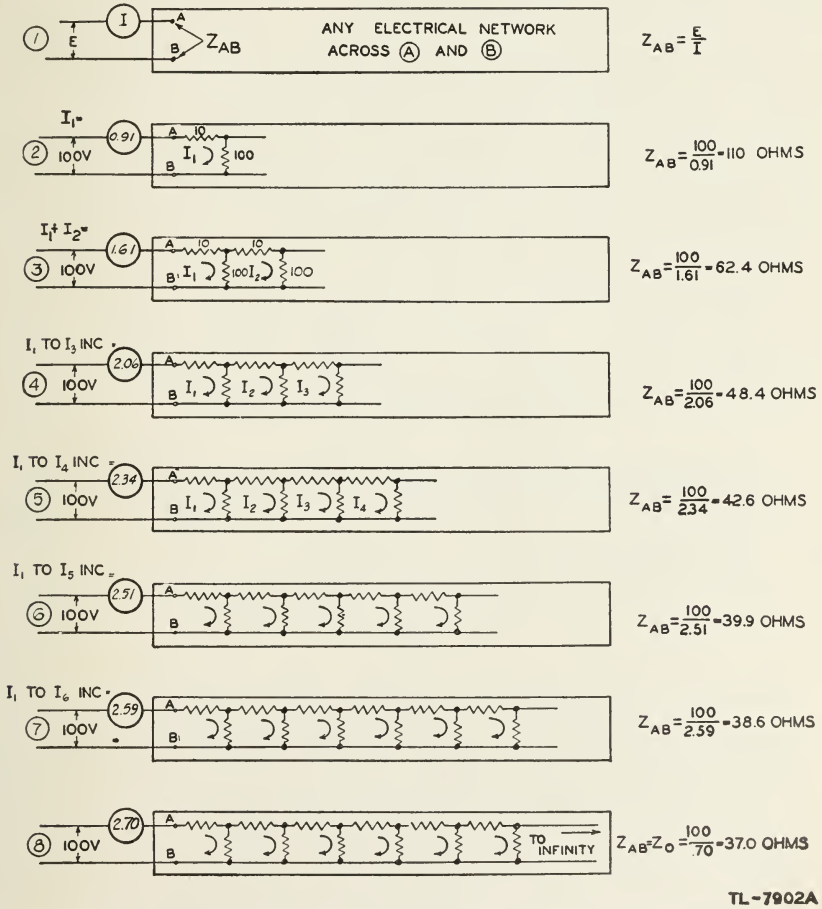

Figure 329. Characteristic impedance of a resistance network.

(6) Figure 329 gives a numerical example of the way small sections of line can be added successively to show characteristic impedance. In ①, any voltage (either direct or alternating) causes a certain current to flow and the ratio of E/I is ZAB, the impedance across AB. In ② a section of parallel wires having a 10-ohm resistor in series and a 100-ohm resistor across the wires obviously has an impedance of 10 + 100 = 110 ohms, assuming for convenience that the current is direct and that the impedance is a pure resistance. In ③, an identical section is added, which is the same as a 110-ohm resistor in parallel with the first 100-ohm resistor. By the rules given for calculating series-parallel resistance in section II, the impedance (or resistance in the case of direct currents) is 62.4 ohms across AB. The current (at 100 volts) is increased from 0.91 to 1.60 amperes to supply the current flowing in the second section. In ④, a third section is added. The 62.4 ohms of 2 sections in parallel with the 100 ohms of 1 section give 38.4 ohms. This resistance of 38.4 ohms is in series with 10 ohms, giving a new impedance Z_{AB} or 48.4 ohms.

(7) The same process is repeated with each new section in ⑤, ⑥, and ⑦. Each time, the impedance across AB is lowered and the current increases, but the change in both is less as more sections are added. If this process is carried out for a dozen or more sections, the impedance across AB is reduced to 37.0 ohms and no further. Several hundred more sections can be added without any noticeable reduction in Z_{AB}, as in ⑧. The value of Z_{AB} then can be considered to be Z_o, the characteristic impedance, or 37.0 ohms. The current increases to 2.70 amperes (at 100 volts direct current across the 37.0 ohms). Nothing can be done to the output end of the line to make the current go any higher, provided the line is very long and is made up of resistors only.

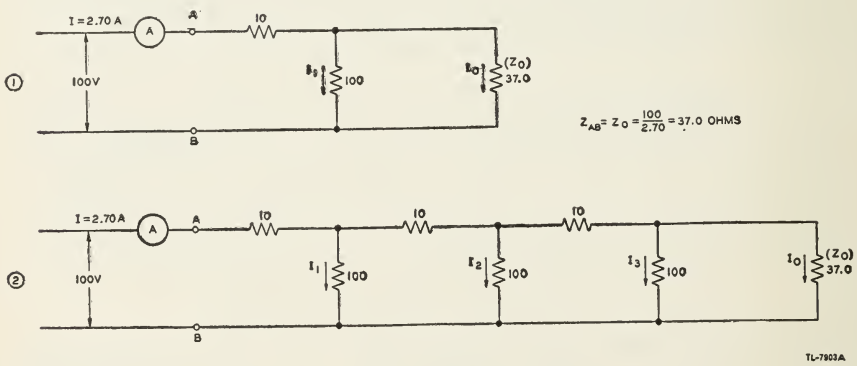

Figure 330. Termination of a line in Z_o.

(8) If the first section has Z_o (37.0) ohms placed across its output instead of a second section (fig. 330①), Z_{AB} still is 37.0 ohms. Furthermore, the current has the same value of 2.70 amperes that it had when the line had many sections. In fact, if this 37.0-ohm resistor is connected across the output end of any of the networks of figure 329, the input impedance Z_{AB} will be 37.0 ohms, the same as the input impedance of an infinite line. Thus there is one value of impedance which the line assumes, if it is very long. Also if this value of impedance is used to terminate a shorter line, the same value of impedance appears at the input.

(9) The example just described used direct current and resistors for impedances. With alternating current on a line, the inductances take the place of the series resistors and the capacitances take the place of the shunt resistors. The ohmic values may be very different on actual lines, as characteristic impedances usually range between 50 and 600 ohms on lines used in practice.

77. WAVE MOTION ON AN INFINITE LINE. a. Waves. (1) Figure 331 shows the sine waves of voltage and current that exist on an infinite line. The voltage maxima and current maxima appear at the same points on this line, but because of line losses the curves keep diminishing in amplitude down the line. This figure illustrates what would happen if the voltage and current could be stopped for an instant in time, as if a movie film were stopped at a single picture. An instant later in time all waves would have moved to the right slightly. In other words, if the voltage and current could be "frozen" on an infinite line at a particular instant in time when the alternating-source voltage had just reached zero, this picture of voltage and current on the line would be obtained. The voltage and current are in phase but decrease in amplitude along the line.

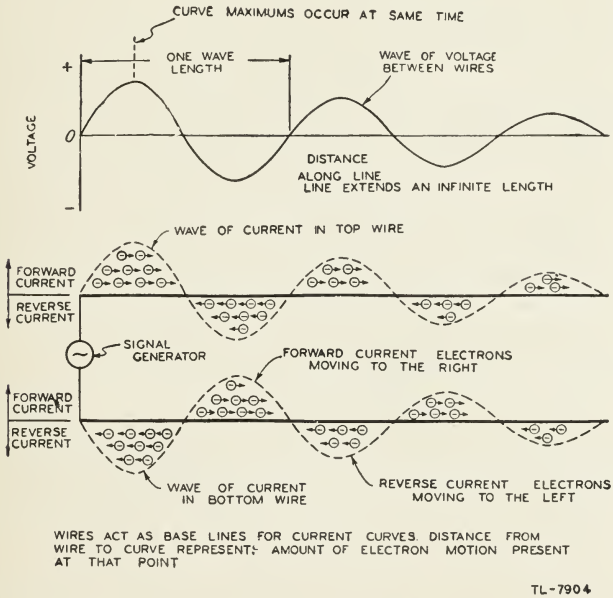

Figure 331. Current and voltage on an infinite line.

(2) Waves exist because it takes a certain amount of time for electrons to transfer energy down a wire by means of their motion. If a pebble is dropped into a pool of water the disturbance does not reach the edge of the pool immediately. Rather, a wave of water starts out from the place where the pebble hits and proceeds toward the edge at a definite speed. In electrical circuits as used in commercial power work, the time which electrical disturbances take to travel to another point on a wire is usually so small that it can be neglected. For example, the fraction of a microsecond which elapses between the time a lamp switch

is closed and the time the electrons in the bulb are affected by its closing usually is ignored. It may not be possible to ignore this time, however, when wavelengths are short.

(3) Electrical energy normally travels at approximately the speed of light (186,300 miles per second or 300,000,000 meters per second). Thus, if an alternator is producing 30,000,000 cycles per second, as in a 30-megacycle r-f transmitter, a positive voltage or current peak travels down a transmission line only 10 meters (a little less than 33 feet) before another positive peak is put into the end of the line by the alternator. At 3,000 megacycles per second the distance is about 4 inches; at 186,000 cycles, almost 1 mile; at 1,000 cycles (audio range), 186 miles; and at 60 cycles (power-line frequency), 3,100 miles.

(4) These wavelengths are illustrated in figure 332, showing forward

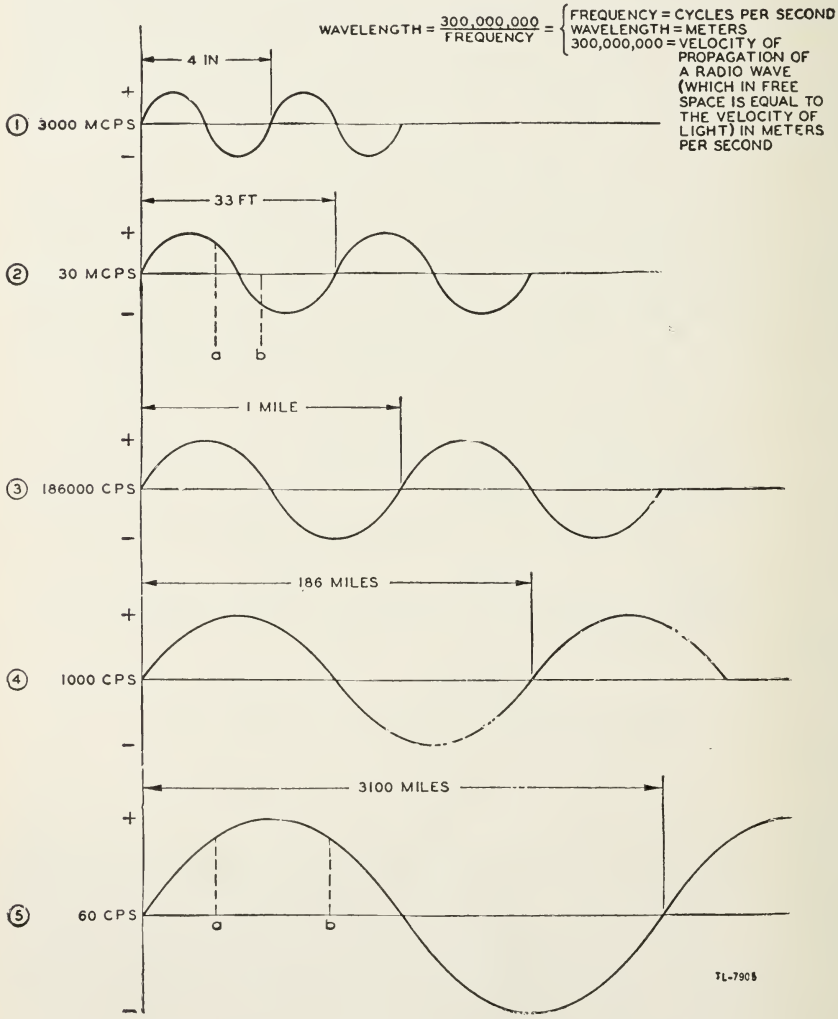

Figure 332. Voltage waves between conductors or current waves on a conductor at various frequencies.

current above the horizontal axis and reversed flow below the axis. Thus, in a wire carrying a 30-megacycle r-f current the current in a wire can reverse completely within a few feet (*a* to *b*, in fig. 332②). Of course a small fraction of a second later this reversal occurs a little farther down the wire. This is because the waves actually are not stationary as they have been pictured, but are moving continuously down the line like the waves of water in the pool.

(5) Figure 332⑤ shows that the wavelength of a 60-cycle voltage is 3,100 miles and that the voltage reverses polarity only at each half-wave-length or at 1,550-mile intervals. Since the length of the normal power-line circuit is usually much less than 1,550 miles, no current reversals occur along the line at any one instant. The distance from *a* to *b*, for instance, might represent a circuit 500 miles long. Even here, however, such a small part of the wave is being considered that the voltage and current values at the input of the circuit are substantially the same as those at the end of the circuit and have the same polarity at the same instant.

(6) These current "reversals" on the "stopped" wave should not be confused with the reversal which takes place at any place on the wire as a complete wave goes by. In the first case the observer "stops the clock" and examines the entire wave of current up and down the wire. In the second case he stays at one point on the wire and lets a wave having positive and negative values go by with time.

(7) In the infinitely long line (fig. 331), the voltage and current always are in phase throughout its entire length. Energy supplied by the generator to such a line never reaches the infinitely distant load end. Consequently, this energy is wasted within the line.

b. Summary. In summary, in the theoretical infinite line—

(1) The voltage and current are in phase throughout the line.

(2) The ratio of the voltage to the current is constant over the entire line and is known as the characteristic impedance.

(3) The input impedance is equal to this characteristic impedance.

(4) Since voltage and current are in phase, the line operates with minimum loss.

(5) Although an infinite line is impossible to attain, actually the concept of such a line is useful because knowledge of its behavior is of great assistance in determining the operating conditions of an actual line. Furthermore, any length of line can be made to appear like an infinite line if it is terminated in its characteristic impedance.

78. REFLECTION. a. Open-end line. (1) One type of r-f transmission line is the open-end line, in which the impedance at the output end can be considered as practically infinite since no load is attached. When energy is applied to the generator end, the first surge consists of a wave of current and a wave of voltage which sweep down the line in phase with each other; that is, their positive maxima are together. The initial current and voltage waves must travel down the line in phase because the characteristics of the line are the same as those of a line which is truly infinite while the wave is travelling toward the output end. The in-phase condition of these waves can be changed *only when they encounter a difference in the impedance* between the two wires of the line. Thus, when the wave of current reaches the open-circuited output end of

the line, the current must collapse to zero since there is no place for electrons to continue to move at this point. When this current wave collapses, the magnetic field set up by it also collapses. In so doing, it cuts the conductors near the output end and induces additional voltage across the line. This voltage acts, in a way, like a reverse generator and sets up new current and voltage waves which travel back on the line toward the input end.

(2) The action is similar to that in a trough of water (fig. 333).

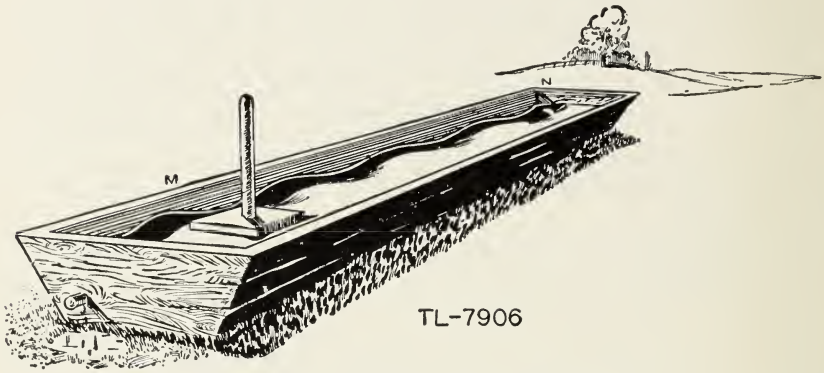

Figure 333. Reflected waves in water.

When energy is applied to the water at *M* by a flat paddle, a wave travels toward the opposite end. If the trough extended infinitely, the waves would keep on traveling. But since the trough ends at *N*, a wave of

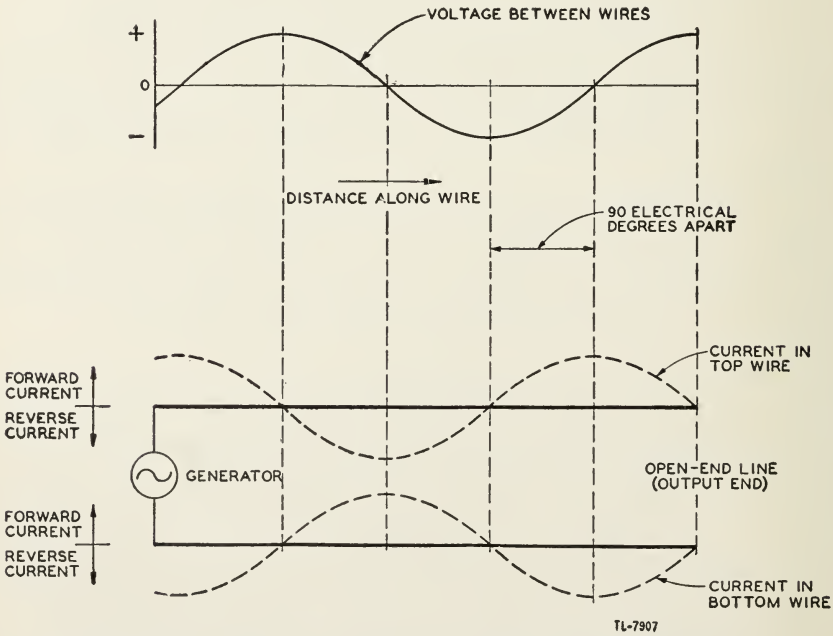

Figure 334. Effect of reflection in causing voltage and current to be out of phase.

water splashes up on the end board, raising a certain amount of water above the average level. As it falls, it delivers its energy to a new water wave which begins to travel back again toward M.

(3) Both the electrical-wave and the water-wave actions are known as reflection. In an open-end line, since the current is zero and the voltage is high at the output end, the resultant current and voltage waves on the conductors are 90° out of phase as soon as the initial waves are reflected once. Figure 334 shows what happens to the waves after reflections are set up.

(4) Besides being 90° offset in phase, the waves of both current and voltage exist as *standing waves* (fig. 335). It is seen that the voltage wave from the generator travels down the line at uniform speed and is reflected at the end. The beginning of the new wave starting back has

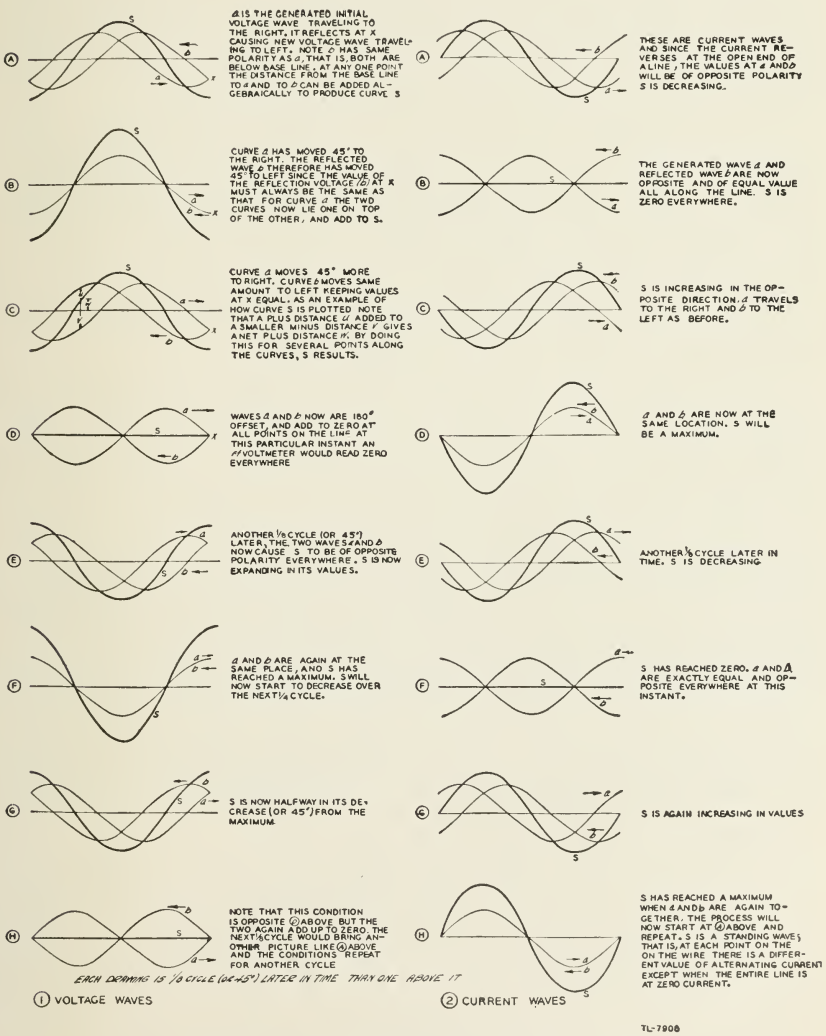

Figure 335. Development of standing waves.

the same polarity as the original, and the two, although varying in value at the output, always add to produce an alternating voltage which is the sum of the two. Therefore, at the end of the open line or at any other location there is a constant value of alternating voltage, which is the sum of the two traveling waves. However, for each different location along the line this value changes. If the values are plotted along the line, the curve of alternating-voltage values forms a standing wave of voltage. Actually, the wave is far from stationary, since the voltage at any one point is alternating and, hence, goes from a positive maximum to zero, to a negative maximum to zero, to a positive maximum again. But the amplitude of the alternation at any one point on the line remains the same. An a-c voltmeter, then, reads a series of values along the line that when plotted produce a standing wave of values. Figure 335 shows a series of different positions of the generated and reflected traveling waves which are added (heavy lines) to show how the standing wave is produced. Whenever two sine waves are added together the sum is another sine wave. Therefore, the standing wave is also a sine wave; that is, it can be plotted by the use of a rotating vector as shown in section II.

(5) A similar condition exists for the current wave (fig. 335) with the exception that the reflected current wave is 180° out of phase with the incident current wave. In other words, the reflected current reverses in direction at the open end of the line. Note that this reversal is opposite to the condition for voltage, since the reflected voltage wave had the same polarity as the incident wave. The two traveling current waves do add, however, and produce standing waves. The maximum values of the standing wave of current are 90° or a quarter-wavelength offset along the line from the maximum voltage values.

(6) On a line which has standing waves of current and voltage, the initial energy from the generator continually is surging back and forth on the line and actually is carried in the electric and magnetic fields about the line. Since energy is used to create these fields of stress, they are able to give back energy when the stress is relieved. Thus, when the first wavefront of current surges down the line from the generator, the maximum current points are surrounded by a magnetic field, but when the current comes to zero at the open end of the line, the magnetic field collapses. This field contains energy which has to be given up, and since there is no load to absorb the energy it is transferred to an electric field. The electric field then demonstrates its existence by appearing as increased voltage at the open end. This interchange of energy continually goes on in a line with standing waves. Any energy absorbed from the generator can go only to two places, either to add to the energy stored in the electric and magnetic fields or to supply line losses such as heat and radiation. Thus, a line with standing waves can be regarded as a storehouse of energy similar to a resonant tank circuit in a radio.

(7) Standing voltage waves can be measured by an r-f voltage indicator. As shown in figure 335, high voltage points or maxima and low voltage points or minima are found. The minima sometimes are called nodes and the maxima antinodes. Theoretically, on a line with no losses, the minima should be zero; however, when there are losses, an in-phase component of current must flow to supply the energy lost, and no zero points exist. Since the indicators seldom are arranged to detect whether a standing wave is positive or negative, both current and voltage waves customarily are shown on one side of the baseline (fig. 336). In many

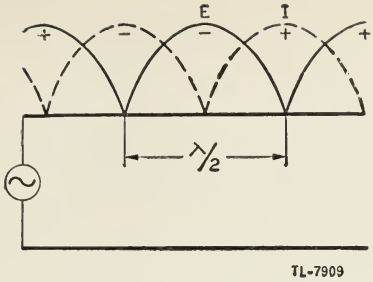

Figure 336. Standing waves on transmission line (polarity shown by + and — signs).

future illustrations, this method will be used, but actually such curves have alternately negative and positive peaks. Polarity may or may not be shown by means of + and — signs. For convenience in drawing, too, most curves show both the voltage between wires and the current in one of the two wires with the top conductor as a baseline or a zero line for the waves.

b. Closed-end line. (1) The voltage and current relations when the line is short circuited are shown in figure 337. Since a short circuit is a

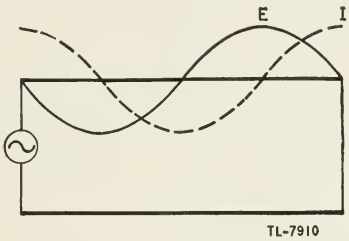

Figure 337. Voltage and current conditions in short-circuited line.

condition of zero impedance, the current at the closed end of the line is maximum while the voltage is minimum.

(2) Reflection occurs in the closed line for the same reason that it did in the open-end line; that is, none of the energy in the initial wave is absorbed by the short circuit. The high current in the short-circuited

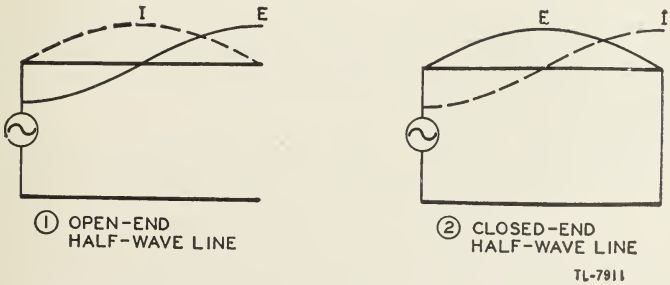

Figure 338. Comparison of voltage and current conditions for open and closed half-wave lines.

end of the line potentially represents energy. Because this energy exists across a zero impedance which cannot absorb it, the only place this energy can go is back along the line toward the source.

(3) The voltage and current relations for open and closed lines are opposite to each other, as illustrated by the half-wave line of figure 338.

(4) The interrelation of open-end, closed-end, and infinite line circuit conditions is shown in figure 339. Comparison of ① and ② shows that, for any length of line, the voltage and current relations are exactly opposite in a closed line to what they are in an open line. The points of maximum and minimum voltage and current must be determined from

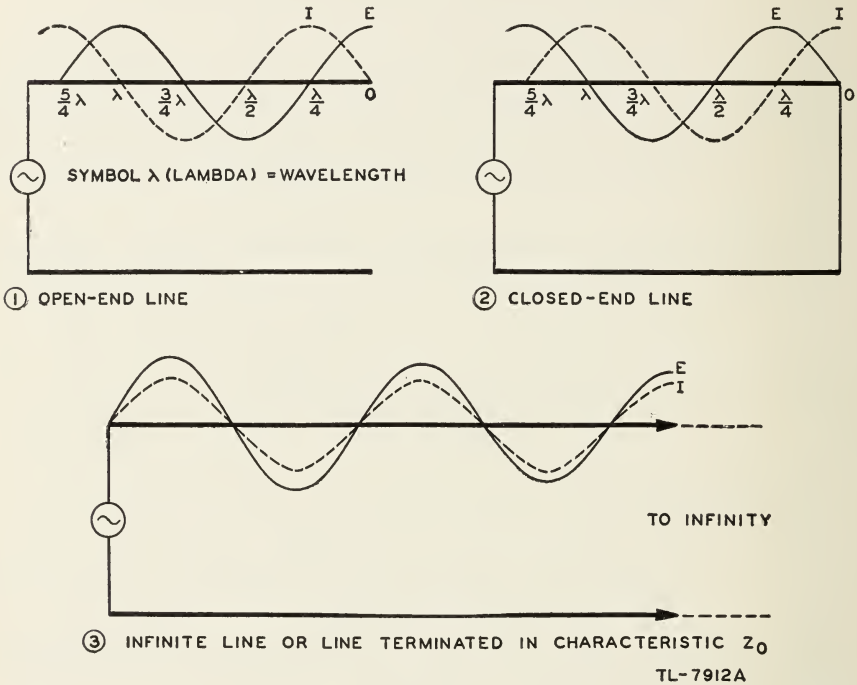

Figure 339. Comparison of transmission lines.

the output end of the line, because reflection always begins at the output end.

(5) A line does *not* have to be of any particular length to produce standing waves. The only requirement for the production of standing waves is that reflection occurs; that is, the line must *not* be terminated in its characteristic impedance.

79. NONRESONANT LINES. a. General. A nonresonant line can be defined as a line which has *no* standing waves of current and voltage. Such a line is either an infinitely long line or a line terminated in its characteristic impedance. Since there are no reflections, all of the energy coming down the line is absorbed by the load. Figure 339③ illustrates the voltage and current waves on a nonresonant line for either an infinite line or a line terminated in its characteristic impedance Z_o. The waves shown are traveling waves like waves of water and progress to the right in this case.

b. Resistance. On lines carrying radio frequencies, the characteristic impedance is almost pure resistance. Therefore it is customary to say that a nonresonant line is terminated in a resistive load equal to its characteristic impedance.

80. RESONANT LINES. a. General. (1) A resonant line can be defined as a line which possesses standing waves of current and voltage. The line is of finite length and is *not* terminated in its characteristic impedance; hence, reflections are present.

(2) A resonant line is sometimes said to be "resonant at an applied frequency." This expression means that it is acting as a resonant circuit at some particular frequency. In such a case it is acting as either a high-resistive or a low-resistive impedance. In order to act in this manner,

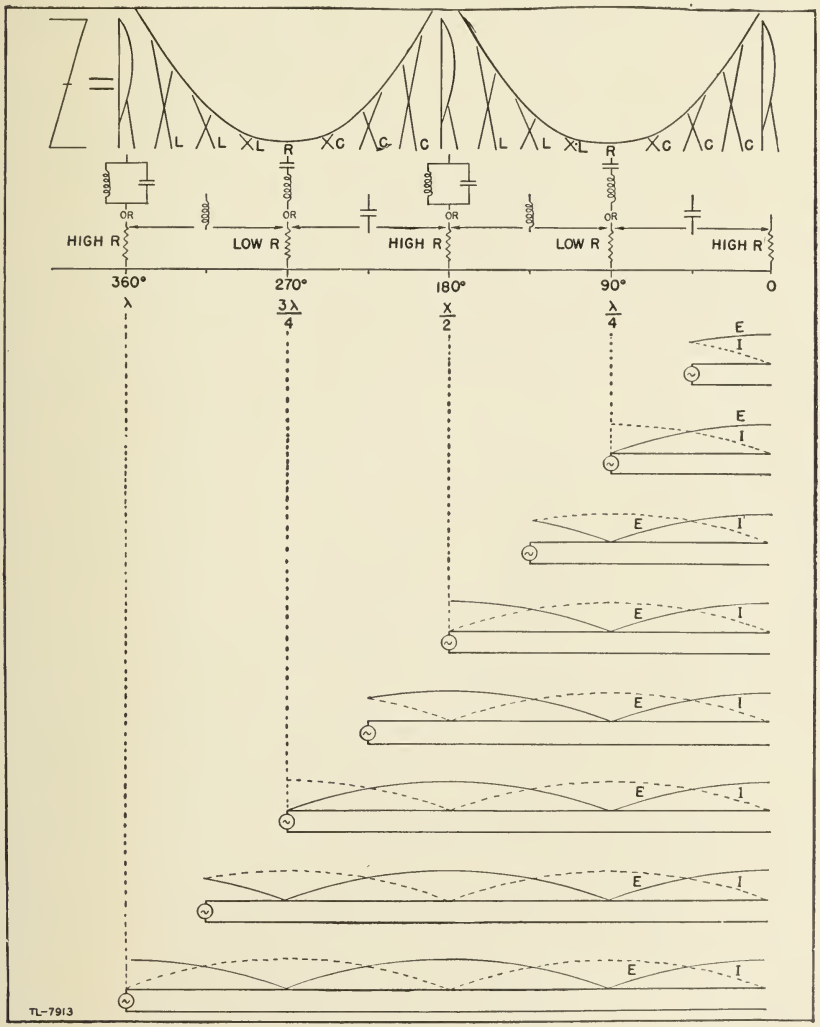

Figure 340. Impedance characteristics of open-end resonant lines.

the line is either open- or short-circuited at the output end and is cut to some multiple of a quarter-wavelength. If the length is not a multiple of a quarter-wavelength the line acts as a capacitor or an inductor.

b. Comparison with an L-C circuit. A resonant transmission line thus may assume many characteristics of a resonant circuit which is composed of lumped inductance and capacitance. The more important circuit effects that resonant transmission lines have in common with the more familiar resonant circuits are given below:

(1) *Series resonance.* (*a*) Resonant rise of voltage across circuit elements.

(*b*) Low impedance across the resonant circuit.

(2) *Parallel resonance.* (*a*) Voltage never in excess of applied voltage.

(*b*) High impedance across the resonant circuit.

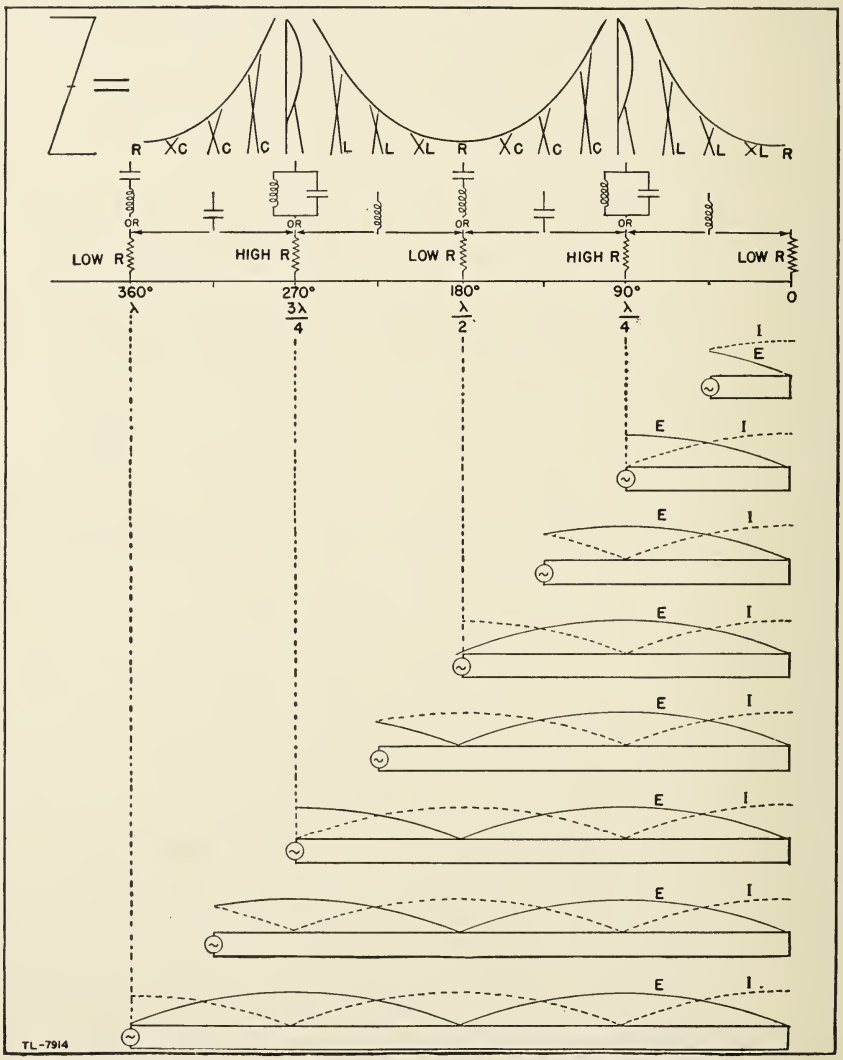

Figure 341. Impedance characteristics of closed-end resonant lines.

c. Diagrams. In studying these applications of a transmission line, careful examination should be made of figures 340 and 341. These illustrate the relation of voltage, current, and impedance for various lengths of both open-end and closed-end transmission lines. The impedance which the generator "sees" for various lengths of line is shown directly above it on the charts. The curves above the letters of various height indicate the relative values of the impedance presented to the generator as it moves from right to left, and the circuit symbols indicate what the equivalent electrical circuits are for the transmission lines at that particular length. The standing waves of voltage E and current I, whose ratio is the impedance Z, are shown without polarity above each line. These waves

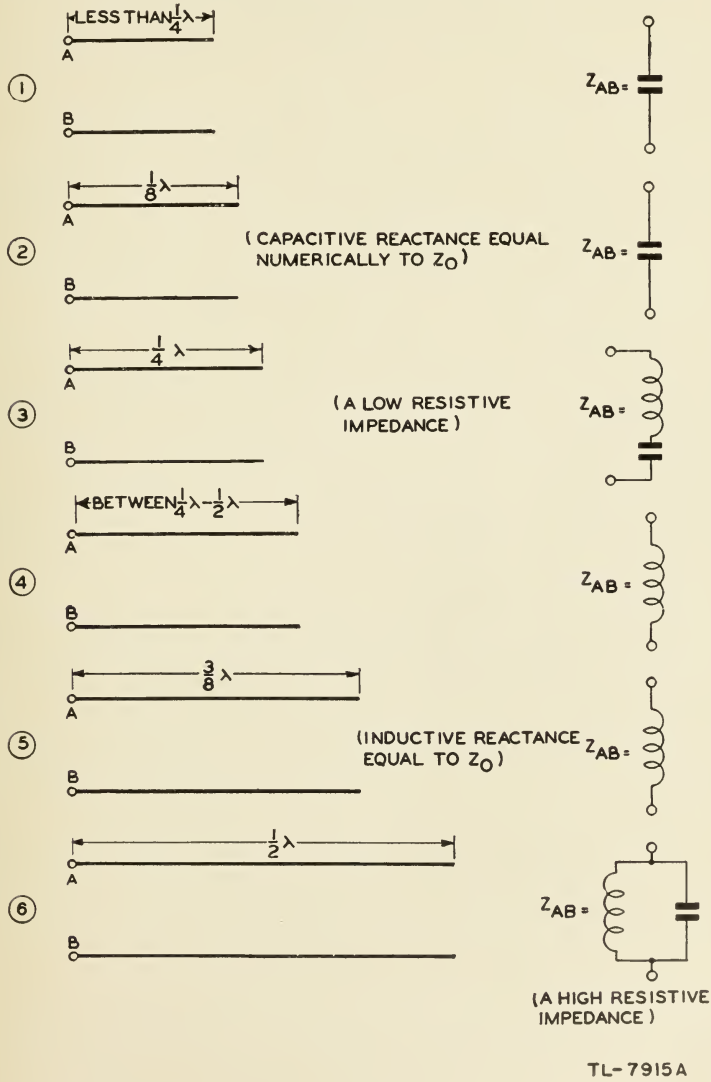

Figure 342. Equivalent circuit diagrams for open-end resonant lines.

are shown on the chart as having the same maximum heights and as going to zero at the minimum points. The last part of this statement actually would be the case only on a line having no losses. Figures 342 and 343 also show equivalent circuits of particular lengths of lines which have been taken from figures 340 and 341.

d. Resonance in open-end lines. (1) The open-end line can be studied with the aid of figure 340. At all *odd* quarter-wave points ($\frac{1}{4}$, $\frac{3}{4}$, etc.) measured *from* the output end, the current is maximum and the impedance minimum. In addition, there is a resonant rise of voltage from the odd quarter-wave point toward the output end. Thus at all odd quarter-wave points the open-end transmission line is *acting* like a series of resonant circuit. Figure 342② shows the equivalent circuit for a quarter-wave line or any *odd* multiple thereof ($\frac{3}{4}\lambda$, $\frac{5}{4}\lambda$, etc.). The impedance is a very low resistance, prevented only by the small circuit losses from being zero.

(2) At all *even* quarter-wave points ($\frac{1}{2}\lambda$, 1λ, $\frac{3}{2}\lambda$, etc.), figure 340 shows that the voltage is maxumum. The voltage in an even-quarter-wave line never exceeds the applied voltage. Comparison of the transmission line with an L-C resonant circuit demonstrates that at even quarter-wavelengths an open-end line *acts* like a parallel resonant circuit. Figure 342⑥ shows the equivalent circuit for a half-wave line or any even multiple of a quarter-wave line ($\frac{1}{2}\lambda$, 1λ, $\frac{3}{2}\lambda$, etc.). The impedance is an extremely high resistance.

(3) In addition to acting as L-C resonant circuits, resonant open-end lines also may act as nearly pure capacitances or inductances. Figure 340 shows that an open-end line less than a quarter-wavelength long acts as a capacitance (fig. 342①) ; from $\frac{1}{4}\lambda$ to $\frac{1}{2}\lambda$ long, as an inductance (fig. 342④) ; from $\frac{1}{2}\lambda$ to $\frac{3}{4}\lambda$ long, as a capacitance; from $\frac{3}{4}\lambda$ to 1λ long, as an inductance and so on. Figure 342② shows than an $\frac{1}{8}\lambda$ open line acts as a capacitive reactance numerically equal to the characteristic impedance Z_o, and ⑤ shows that a $\frac{3}{8}\lambda$ open line acts as an inductive reactance numerically equal to Z_o.

e. Resonance in closed-end lines. (1) The closed-end line can be studied with the aid of figure 341. At the odd quarter-wavelength the voltage is high, the current low, and the impedance high. Also at no place in such a line does the voltage exceed the applied voltage. Since these conditions are similar to those in a parallel resonant circuit, the shorted transmission line of odd quarter-wavelengths acts like a parallel resonant circuit. Figure 343③ illustrates the equivalent circuit for this condition of a quarter-wavelength shorted line.

(2) At the *even* quarter-wave points, the voltage is minimum, the current maximum, and the impedance minimum. Since this action is similar to series resonance in an L-C circuit, a shorted transmission line of even quarter-wavelengths acts like a series resonant circuit. Figure 343⑥ illustrates the equivalent circuit for a half-wavelength line.

(3) Resonant closed-end lines, like the open-end lines, also act as nearly pure capacitances or inductances. Figure 341 shows that a closed-end line less than $\frac{1}{4}\lambda$ long acts as an inductance (fig. 343①) ; from $\frac{1}{4}\lambda$ to $\frac{1}{2}\lambda$ long as a capacitance (fig. 343④), and so on. Figure 343② shows that an $\frac{1}{8}\lambda$ line acts as an inductive reactance numerically equal to the characteristic impedance Z_o, and ⑤ shows that a $\frac{3}{8}\lambda$ line is equivalent

to an inductance of the same size. In figure 343⑦, termination in Z_c is illustrated. The input impedance in this case is equal to Z_o.

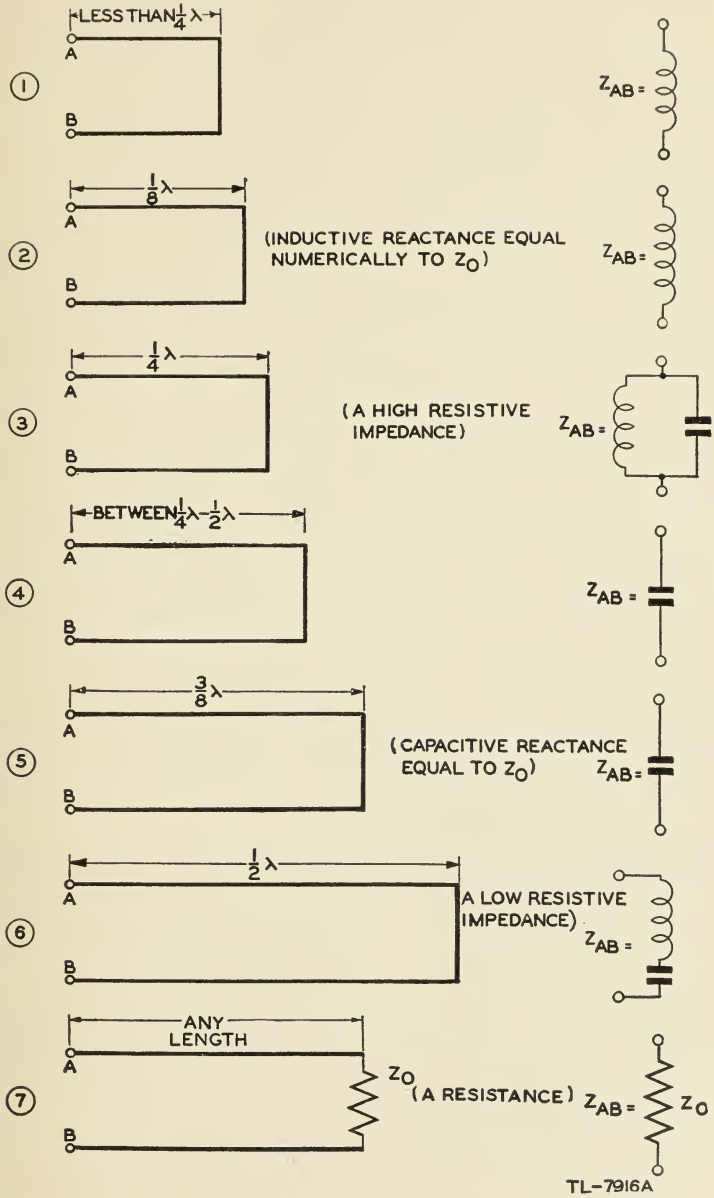

Figure 343. Equivalent circuit diagrams for closed-end resonant lines.

f. Quarter-wave resonant line changed to nonresonant line. (1) Any line, even if cut to a particular fraction of a wavelength, loses its resonant characteristics when terminated in Z_o.

(2) Since a quarter-wavelength open-end line has a low E and a high I (fig. 340), there is a low impedance at AB in figure 344①. Conversely, since a quarter-wavelength closed-end line has a high E and a low I (fig.

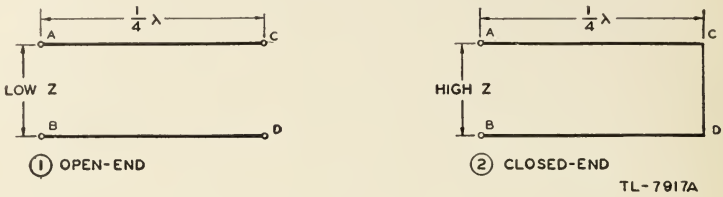

Figure 344. Quarter-wave lines.

341), there is a very high impedance at AB in figure 344②. Now if this same quarter-wavelength line were terminated in its characteristic impedance Z_o, it immediately would become a nonresonant line and would present an impedance at AB equal to Z_o. In figure 345 no difference can

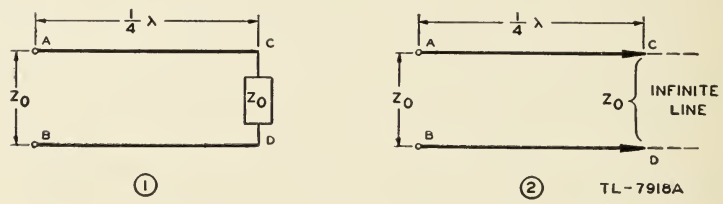

Figure 345. Quarter-wave lines terminated in Z_o.

be detected at terminals AB whether the quarter-wavelength line is as in ① or as in ②. In other words, the quarter-wavelength line has lost the characteristics of a quarter-wavelength resonant line and has merely become a nonresonant line with a length which has no particular significance.

g. Line terminated in a reactance. (1) A line terminated in a *resistance* equal to its characteristic impedance normally has no reflections present. However, if a line is terminated in a *reactance* equal to its characteristic impedance or equal to any other impedance, standing waves are *not* eliminated. Figure 346① shows the standing waves which exist on a line terminated in a capacitance reactance equal to its characteristic impedance. Figure 346② shows the standing waves which exist on a line terminated in an inductive reactance equal to the characteristic impedance.

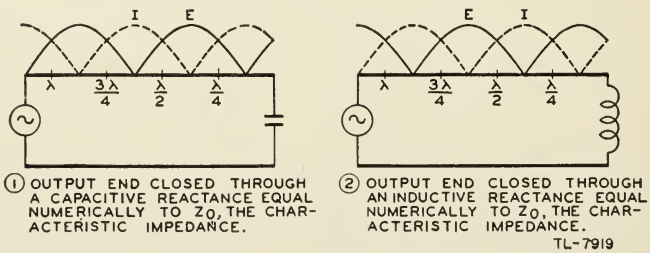

Figure 346. Reactance terminations.

(2) Note in figure 346① that with a capacitance-reactance load the last resonance point (of current) is closer than a quarter-wavelength to the output end of the line. Similarly, in figure 346② the last resonance point (of voltage) is closer to the line termination than a quarter-wavelength.

(3) With capacitive termination the voltage and current distribution has essentially the same character as with the open circuit, except that the curves are shifted toward the output end of the line by an amount that increases as the capacitive reactance is reduced; that is, as the line approaches the closed-line condition.

(4) With inductive termination the voltage and current distribution has essentially the same character as with a short-circuited output end, except that the curves are shifted toward the output end by an amount that increases as the load reactance approaches infinity, that is, as the line approaches the open-line condition.

81. TYPES OF TRANSMISSION LINES. a. General. Four general types of transmission lines are

(1) The two-wire or parallel-conductor line.

(2) The concentric (coaxial) line.

(3) The twisted pair.

(4) The shielded pair.

b. Construction of parallel two-wire line. (1) The most common type of transmission line consists of two parallel conductors which are maintained at a fixed distance by means of insulating spacers or spreaders at suitable intervals (fig. 347). This line is used frequently because of its ease of construction, its economy, and its efficiency. In practical applications two-wire transmission lines are used for commercial power lines,

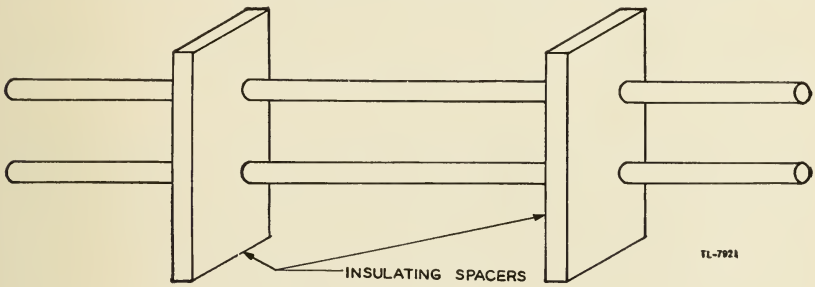

Figure 347. Parallel two-wire line.

telephone lines, and telegraph lines, and as the connecting links between an antenna and transmitter or an antenna and receiver.

(2) In practice, such lines used in radio work are generally spaced from 2 to 6 inches apart for 14-megacycle and lower frequencies. The maximum spacing for 38-megacycle or higher frequencies is 4 inches.

(3) The principal disadvantage of the parallel-wire transmission line is that it has high radiation loss and therefore cannot be used in the vicinity of metallic objects at extremely high frequencies because of the greatly increased loss which results.

c. Construction of concentric line. (1) The concentric or coaxial line has advantages which make it very practical for efficient operation at the

extremely high frequencies. It consists of a wire inside of and coaxial with a tubular outer conductor (fig. 348). In some cases the inner conductor also is tubular. The inner wire or conductor is insulated from the outer conductor by insulating spacers or *beads* at regular intervals. The spacers are made of pyrex, polystyrene, or some other material possessing good insulating qualities and low loss at high frequencies. Concentric cables also are made with the inner conductor consisting of flexible wire insulated from the outer conductor by a solid and continuous insulating material. Flexibility may be gained if the outer conductor is made of metal braid, but the losses in this type of line are rather high.

(2) The chief purpose of the coaxial line is to keep down radiation losses. The need for this line originates because in the two-wire parallel line the electric and magnetic fields extend out into space for great distances and tend to cause radiation losses and noise pick-up from other lines. In a coaxial line, however, no electric or magnetic fields extend outside of the outer conductor and all fields exist in the space between the two conductors. Thus the coaxial line is a perfectly shielded line.

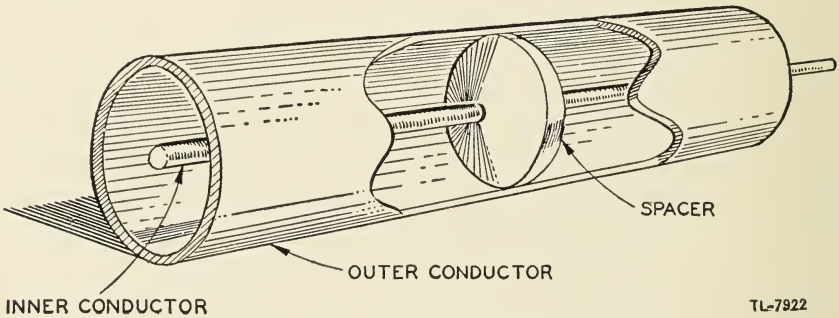

Figure 348. Construction of concentric line.

(3) The advantages of an efficient concentric line are that it has practically no radiation loss and, therefore, near-by metallic objects cause no loss because the outer conductor acts as a shield for the inner conductor and that the concentric line is easily installed. Its disadvantages are that it is more expensive for a given length of line, that its loss at extremely high frequencies limits its use except for short distances, and that it must be kept dry in order to prevent excessive leakage between the conductors. To prevent condensation of moisture the lines may be filled in certain applications with dry nitrogen at pressures ranging from 3 to 35 pounds per square inch. The nitrogen is used to dry the line when first installed, and a pressure is maintained to insure that leakage will be outward.

d. Construction of twisted pair. The twisted pair, as the name implies, consists of two insulated wires twisted to form a flexible line without the use of spacers (fig. 349). It generally is used as an untuned line for low-frequency transmission. It is not used at the higher frequencies because of the high losses occurring in the rubber insulation. These excessively high losses also make its use possible over only very short distances at lower frequencies. Its chief advantage is that it may be used where more efficient lines would not be feasible because of mechanical considerations.

Figure 349. Twisted pair.

e. Construction of shielded pair. (1) The shielded pair (fig. 350) consists of two parallel conductors separated from each other and surrounded by an insulating dielectric material, such as the plastic, copaline. The conductors are contained within a copper-braid tubing which acts as a shield for them. This assembly is covered with a rubber or flexible-composition coating to protect the line against moisture and friction. Outwardly, it looks much like an ordinary power cord for an electric motor.

(2) The outstanding advantage of the shielded pair is that the two conductors are balanced to ground; that is, the capacitance between each conductor and ground is uniform along the entire length of the line and the wires are shielded against pick-up of stray fields. This balance is

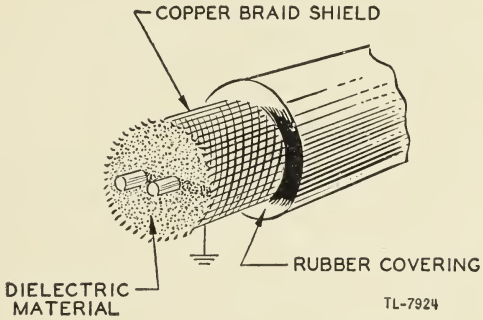

Figure 350. Shielded pair.

effected by the grounded shield which surrounds the conductors at a uniform spacing throughout their length. If radiation from an unshielded line is to be prevented, the current flow in each conductor must be equal in amplitude in order to set up equal and opposite magnetic fields which thereby cancel out. This condition may be obtained only if the line is well in the clear of all obstructions, and the distance between wires is small. But if the line runs near some grounded or conducting surface, one of the two conductors will be nearer that obstruction than the other. A certain amount of capacitance exists between the two conductors and the conducting surface over a length of the line, depending upon the size of the obstruction. This capacitance acts as a parallel conducting path for each half of the line, causing a division of current flow between each conductor. Since one conductor is nearer the obstruction than the other, the current flow is greater in one conductor, resulting in an inequality of current flow in the two conductors and therefore incomplete cancellation and radiation. The shielded line, therefore, eliminates such losses to a considerable degree by maintaining balanced capacitances to ground.

82. DETERMINATION OF CHARACTERISTIC IMPEDANCE AND WAVELENGTH. a. Two-wire line. (1) Since the characteristic impedance of Z_o of a transmission line is equal to the square root of L/C, a two-wire line

having almost any desired characteristic impedance can be constructed in practical applications.

(2) The approximate formula $Z_o = \sqrt{L/C}$ indicates that the characteristic impedance depends principally on the values of L and C in the line. An increase in the separation of the wires increases the inductance and decreases the capacitance. This effect takes place because the effective inductance is very low if two wires are closely spaced and carrying currents in opposite directions, and because the capacitance is low if the plates of a capacitor are widely separated. Thus the effect of increasing the spacing is to increase the characteristic impedance, since the L/C ratio is increased. Similarly a reduction in the diameter of the wires also increases the characteristic impedance. This reduction affects the capacitance more than the inductance, for it is equivalent to decreasing the size of the plates in a capacitor in order to obtain lower capacitance. Any change in the dielectric material between the two wires also changes the characteristic impedance. Thus, if a change in dielectric material increases the capacitance between the wires, the characteristic impedance is reduced.

(3) The characteristic impedance of a two-wire line with air as a dielectric may be obtained from the formula.

$$Z_o = 276 \log_{10} \frac{b}{a}$$

in which b is the spacing between the centers of the conductors and a is the radius of the conductor. This formula is sufficiently accurate at high frequencies where the characteristic impedance is practically a pure resistance.

Example: If two wires ¼ inch in diameter are spaced 2 inches apart, what is the characteristic impedance?

$$Z_o = 276 \log_{10} \frac{b}{a}$$

$$b = 2 \text{ inches}$$

$$a = \tfrac{1}{2} \times \tfrac{1}{4} = \tfrac{1}{8} \text{ inch}$$

$$Z_o = 276 \log_{10} \frac{2}{\frac{1}{8}} = 276 \log_{10} 16$$

From a table of logarithms, $\log_{10} 16 = 1.204$

$$Z_o = 276 \times 1.204 = 332.3 \text{ ohms}$$

(4) A few typical characteristic-impedance values obtainable with two-wire transmission lines are:

Wire gauge Size of wire	*Space in inches*	*Z_o in ohms*
18	2	560
10	2	440
18	3	610
10	3	480

b. Concentric line. The characteristic impedance of a concentric line also varies with L and C. However, because the difference in construction of the two lines causes L and C to vary in a slightly different manner, the following formula must be used in determining the characteristic impedance of the concentric line:

$$Z_o = 138 \log_{10} \frac{b}{a}$$

where b is the inner diameter of outer conductor and a is the outer diameter of inner conductor.

c. Impedance charts. (1) Two convenient graphs (fig. 351) make it possible to determine quickly the characteristic impedance of either a two-wire parallel or a concentric line when the ratio $\frac{b}{a}$ is known.

(2) For example, a two-wire line made of copper tubing of ¼-inch diameter and spaced 3 inches apart has a $\frac{b}{a}$ ratio of $\frac{3}{1/8} = 24$. From

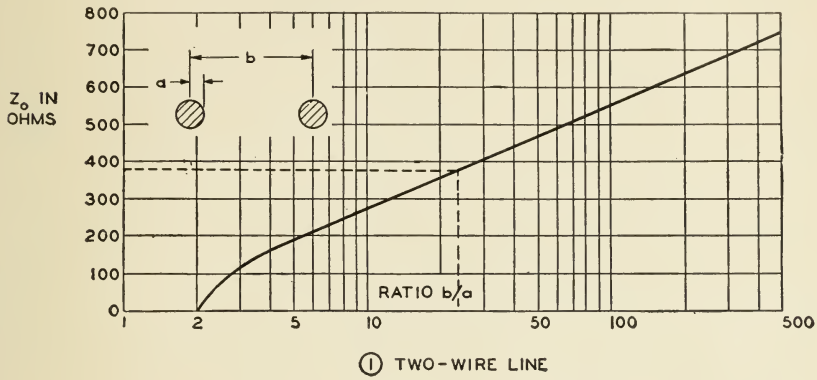

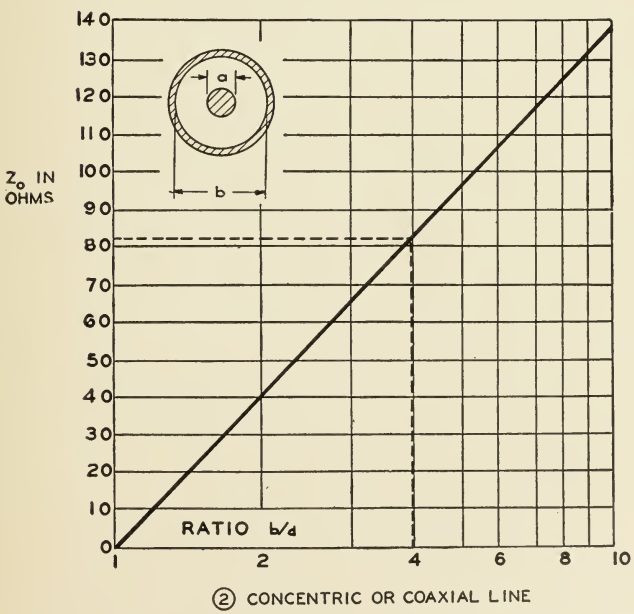

TL-7925A

Figure 351. Characteristic impedance graphs for two-wire and concentric lines.

figure 351① the value of 24 on the base line can be carried up to the slant line and thence over to the left to the vertical scale (see dotted lines). Thus a value of approximately 375 ohms is obtained. A more exact value of 381 ohms can be calculated from the equation in *a* above.

(3) A concentric line having an inner-conductor diameter of 1/16 inch and an inner diameter for the outer conductor of 1/4 inch has a $\frac{b}{a}$ ratio of $\frac{1/4}{1/16} = 4$. From figure 351② a value of approximately 82 ohms is obtained. From the equation in *b* above a more exact value of 83.1 ohms can be calculated.

d. Elimination of standing waves. (1) The difficulties of making high-frequency measurements are so great that it is usually more practical to calculate the characteristic impedance Z_o by means of the preceding formulas. However, a simple method of measuring Z_o, although by no means the most accurate, is to terminate the line with a calibrated non-inductive variable resistor. When this resistor is varied, the standing waves also vary. When the standing waves are eliminated as measured by an r-f indicator, the line can be considered to be terminated in its characteristic impedance which can be read from the calibrated resistor.

(2) The method above can be used to determine whether the line is terminated properly for a nonresonant condition. Thus, it is not even necessary to know the *value* of Z_o. It is necessary merely to vary the load on the output end of the line until the standing waves are at a minimum.

e. Wavelength measurements. (1) Since the maximum and minimum points must be measured from the output end and occur at points determined by the frequency of the applied voltage, it is convenient to measure the distances of these points in terms of wavelength. Since the distance between two minimum or maximum points is equal to half a wavelength, one wavelength is twice the distance between two adjacent minimum or maximum points (fig. 352). The distance along the line corresponding to one wavelength is also given by the equation

$$\text{Wavelength} = \frac{\text{Velocity of propagation}}{\text{frequency}} = \frac{L}{f\sqrt{LC}}$$

In this formula L and C are respectively the series inductance and the shunt capacitance per unit length, and f is the frequency of the applied voltage.

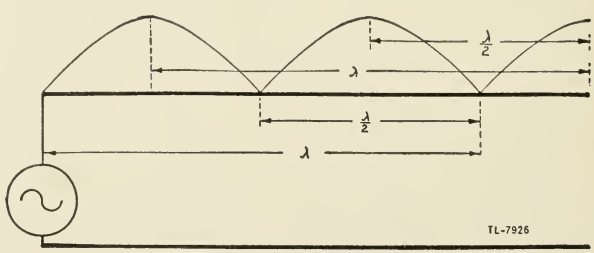

Figure 352. Determination of wavelength by means of standing waves.

(2) Because energy travels more slowly on a wire than in a free space, the wavelength is shorter on the wire than in space. The electrical length of a wire, then differs slightly from the length in terms of the

free-space wavelength because the capacitance effects between the wires and ground decrease the velocity of propagation on the line. Also, the spacers and insulating materials used have a dielectric constant greater than air which increases the effective capacitance, which also affects the velocity. The electrical *quarter-wavelength* for various types of lines may be calculated from the formula

$$l \text{ (in feet)} = \frac{246 \times k}{\text{frequency (in megacycles)}},$$

where l is the quarter-wave-length and k is a constant which depends on the type of line. It is the factor expressing the ratio of the actual velocity of the energy on the line to the velocity of light. For ordinary construction, k is as follows:

Type of line	k
Parallel line	0.975
Parallel tubing	0.95
Concentric line (air insulated)	0.85
Concentric line (rubber-insulated)	0.56 to 0.65
Twisted pair	0.56 to 0.65

f. Lecher lines. (1) Lecher lines is a term sometimes applied to lengths of parallel two-wire transmission line which are used as tuned-circuit elements, or as resonant lines for the purpose of obtaining wave-length measurements. Such lines are, in general, between ¼ and 5 wave-lengths long and usually having a shorting-bar adjustable over a considerable range of length. When used for wavelength measurement, the input end may be closed and coupled inductively, or open and coupled capacitively to the source of r-f energy. In figure 353① the Lecher line is coupled capacitively through a pair of capacitors which have very low capacitance. The low capacitance causes the line to be effectively open at the input end. In figure 353② the line is coupled inductively to a source of energy and therefore closed at *both* ends. In practice, the shorting bar at the input end may be a single turn of wire.

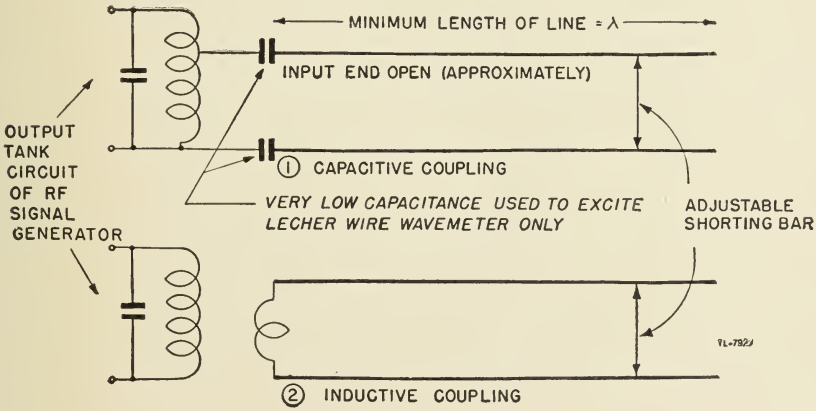

Figure 353. Two methods of coupling Lecher lines.

(2) Consider the case in which the wires are capacitively coupled at the generator or input end (fig. 354①). If the bridge or shorting bar is placed at the quarter-wave point, there is a reflection of current at the shorting bar and high voltage at the open (input) end. The suc-

cessive reflections build up a standing wave such that the current in the bar is limited only by the very low resistance of the bar. An ammeter *A* in the shorting bar indicates a high current limited only by the resistance of the circuit. However, this current is out of phase with the voltage, and the power supplied by the generator would be zero if there were no losses in the line. The quarter-wave line (fig. 354①), shorted at the output end and open at the generator, acts like a parallel resonant circuit. That is, the circulating current is limited only by the resistance of the system while the generator current is very low, and the input impedance of the transmission line at the generator is high.

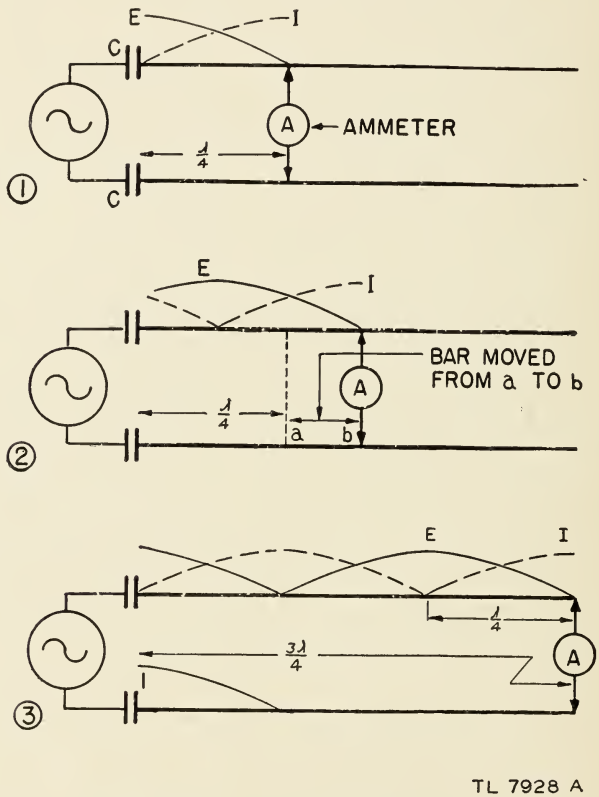

Figure 354. Variation of standing waves with changes of shorting bar position.

(3) If the shorting bar now is moved from the quarter-wave position, the current through it remains approximately the same, since the bar remains at a point of current maximum. The resulting current and voltage relations are shown in figure 354②, in which the bar has been moved to a point somewhat greater than one-quarter wavelength from the generator. The current supplied by the generator has now increased since the input impedance has lowered.

(4) If the bar now is moved to the three-quarter-wave point (fig. 354③), the current in the bar will still be maximum. In this case, the current would be exactly the same as at the quarter-wave point except

for the fact that the larger length of line has greater resistance. Therefore, the current through the bar is somewhat lower. At the same time the power supplied by the generator is somewhat greater, indicating that the losses have increased because of the added resistance. The maximum possible impedance is obtainable with a line which is one-quarter wave long, shorted at the output end, and open at the input end.

(5) Lecher lines may be used to measure wavelengths by detecting the positions of either the current maxima (or minima) or the voltage maxima (or minima). Current values can be measured roughly by the use of a small loop or coil of wire which can be placed close enough to the lines to couple into the magnetic fields. A meter across the loop will then read a maximum value when the loop is opposite a current maximum, and a minimum value when opposite a current minimum. The wavelength is then twice the distance between two successive maxima (or minima). Figure 355① and ② shows a type of r-f current indicator which can be used in determining these locations. The diode is used as a rectifier element so that the d-c meter will be operated by the r-f energy picked up by the loop.

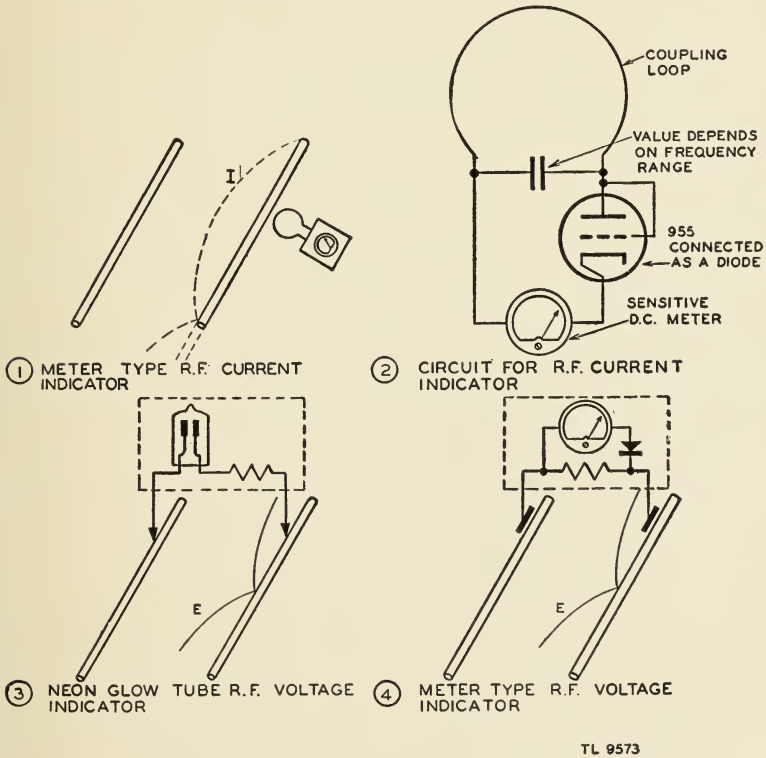

Figure 355. R-f indicators.

(6) In some cases it may be more convenient to use an r-f voltage indicator and locate the voltage maxima or minima. Figure 355③ and ④ shows two types of r-f voltage indicators which may be used. The indicator in ③ consists of a neon bulb and a resistor placed across the line. In ④ the bulb is replaced by a meter and a rectifier element

which at high frequencies will be a crystal element or a diode. Capacitive coupling takes the place of the direct contact in ③. A third method of voltage indication, occasionally used for rough measurement, is to hold an ordinary fluorescent light bulb with one end in the hand and the other end near the line. If the line has standing waves, the bulb will glow with varying brightness as it is moved along the line. For the best results care must be taken to keep the bulb at a uniform distance from the line.

83. APPLICATIONS OF RESONANT LINES. a. General. R-f transmission lines have many important uses besides the transmission of power from point to point. A few of the functions which will be discussed are:

(1) Metallic insulators.
(2) Wave filters and chokes.
(3) Reactors.
(4) Impedance-matching devices.
(5) Phase-shifters and inverters.
(6) Oscillator frequency controls.
(7) Line balance converters.

b. Quarter-wave line as a metallic insulator. (1) When a quarter-wave line is shorted at the output end and is excited to resonance at the other end by the correct frequency, there are standing waves of current and voltage on the line. At the short circuit, the voltage is zero while the current is a maximum. At the input end, the current is nearly zero and the voltage is a maximum; therefore the E/I ratio and thus the impedance is very large. Since an exceedingly high impedance across the terminals looks like an insulator to another line, at a certain frequency a line can be cut to a quarter-wavelength, shorted at the output end, and used as an insulator at its two open terminals.

(2) Figure 356① shows a quarter-wave section of line acting as a stand-off insulator for a two-wire transmission line. Naturally for direct current this section acts as a direct short on the line, but for the particular frequency which makes the section a quarter-wavelength, it

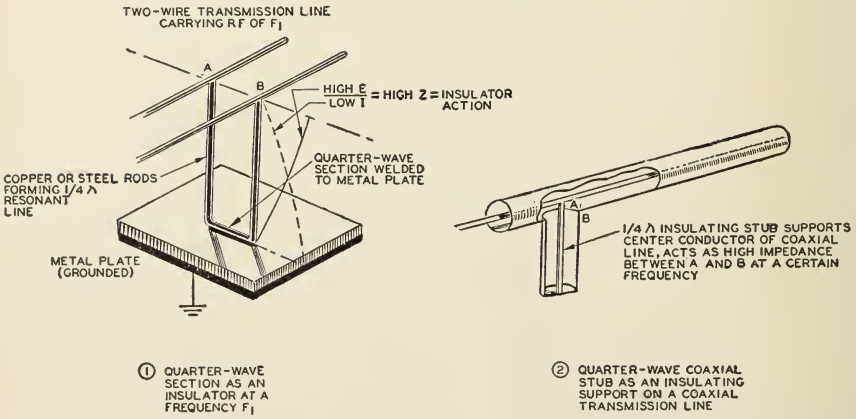

Figure 356. Quarter-wave insulators.

acts as a highly efficient insulator. At terminals A and B there is a high voltage and a low current. Since $Z = \frac{E}{I}$, the impedance between A and B must be very high. The insulator obtains a negligible amount of energy from the line to make up any losses caused by the circulating current, after having absorbed enough energy from the line during the first few cycles to set up the resonant condition. If the frequency varies too widely from the value for which the section is designed, the section rapidly becomes a poor insulator and begins to act as a capacitor or an inductor across the line.

(3) Figure 356② shows a quarter-wavelength of coaxial line which is "teed" into a coaxial transmission line to support the center conductor. If the quarter-wave stubs are spaced close enough together to provide adequate mechanical support, this type of insulation usually is more efficient than the use of beads of dielectric material if the coaxial line is to operate at *one frequency only.*

c. Quarter-wave line as filter. (1) The characteristics of a quarter-

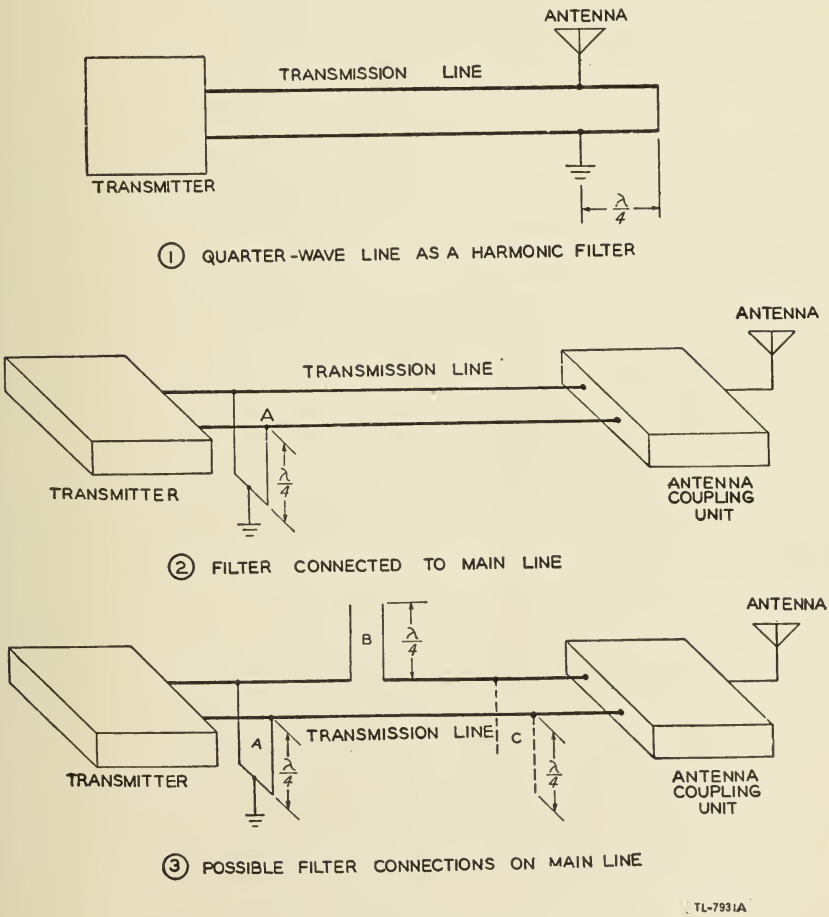

Figure 357. Quarter-wave filters.

wave line also permit its use as an efficient filter or suppressor of even harmonics. Suppose that a transmitter is operating on a frequency of 5 megacycles per second and complaints are received that the transmitter is causing excessive interference on 10 and 20 megacycles. Along with other means of eliminating radiation at these even harmonic frequencies, a resonant transmission line may be tried as a harmonic suppressor.

(2) Figure 341 shows that a quarter-wave line shorted at the output end offers maximum impedance to the fundamental frequency, in this case 5 megacycles. However, at a frequency twice the fundamental such a line is a half-wave line, while at a frequency four times the fundamental the line becomes a full-wave line. Figure 341 shows that a half- or full-wave line, which is shorted at the output end, offers zero impedance at its input end. Therefore, the radiation of even harmonics from the transmitting antenna can be eliminated almost completely by means of the circuit shown in figure 357①. The resonant filter line shown is a quarter-wave at 5 megacycles and offers almost infinite impedance to this frequency. But at the second harmonic, 10 megacycles, the line is a half-wave and offers zero impedance, thus shorting this frequency to ground. Again at 20 megacycles, the filter line is a full-wave line, offering zero impedance and effectively grounding all 20-megacycle energy. The quarter-wave filter may be inserted anywhere along the nonresonant transmission line (fig. 357②) with similar effect.

(3) Both open and closed quarter-wave resonant lines may be used as wave filters. Figure 357③ shows how more than one line filter may be connected between a transmitter and an antenna to eliminate the radiation of undesired frequencies. In this case, a quarter-wave filter *B* which is open at the output end is placed in *series* with the transmission line. Reference to figure 340 shows that a quarter-wave line, which is open at the output end, offers low impedance to the fundamental frequency. At each odd harmonic such a line is an odd multiple of a quarter-wave and therefore offers little impedance to the odd harmonics. Thus, the quarter-wave open filter line, *B* in figure 357③, passes the fundamental and odd harmonics along the line to the antenna coupling unit. At the even harmonics, however, the length of the open line becomes a half-wave, or some multiple of a half-wave, so that line *B* offers high impedance to the even harmonics and blocks their passage to the antenna coupling unit.

(4) The way in which two quarter-wave lines, one an open-end line *B* and the other a closed-end line *A*, connected as in figure 357③, assist each other in filtering out even harmonics may be readily understood from the tabulation below:

Quarter-wave line	Connection	Fundamental	Harmonics			
			2d	3d	4th	5th
Open	Series	Low Z	High Z	Low Z	High Z	Low Z
Shorted	Shunt	High Z	Low Z	High Z	Low Z	High Z

(5) Unfortunately this method cannot be used to eliminate odd harmonics, because any attempt to eliminate the odd harmonics also results in loss of the fundamental frequency. For example, assume that line *C* of figure 357③ is a quarter-wave at the third harmonic, namely, 15 megacycles. This frequency would be eliminated effectively before it could reach the antenna. However, the fundamental that is to be transmitted also would be greatly attenuated. If a line is a quarter-wave at 15 megacycles

it is a 1/12-wave line at 5 megacycles. Examination of figure 340 shows that a 1/12-wave line would act as a capacitor and offer a fairly low impedance to 5 megacycles. Therefore, although 15-megacycle radiation would be suppressed, the desired carrier also would be suppressed considerably.

(6) However, other types of filters can be built for more than the elimination of even harmonics. In fact, such filters are designed to eliminate efficiently the radiation of an entire single side band of modulated carrier.

d. Transmission line as reactance. (1) Inasmuch as a transmission line may be used as a low-loss inductive or capacitive reactance, figure 358 shows reactance variation for various lengths of a transmission line for both the open and closed output end conditions.

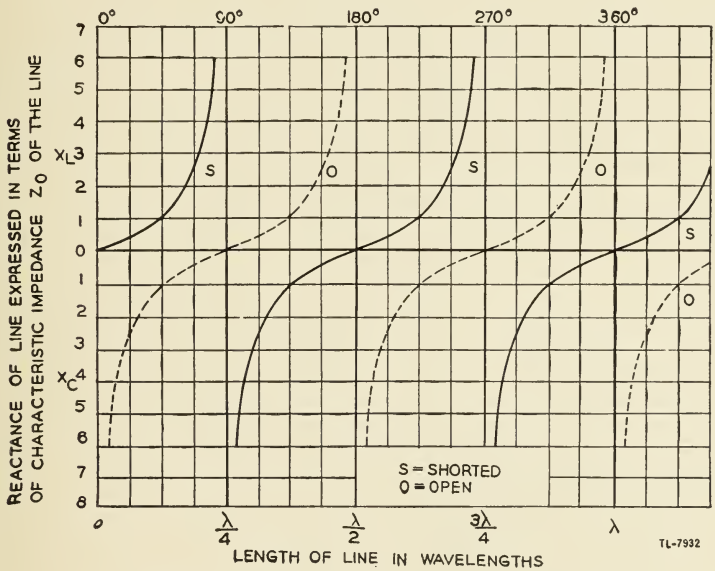

Figure 358. Transmission-line reactance graph.

(2) The open-end line, for example, acts as a capacitive reactance at lengths shorter than a quarter-wave. In fact, at 1/8 wavelength such a line has a capacitive reactance equal in magnitude to its characteristic impedance. Therefore an open line less than $\lambda/4$ in length may be used as a capacitor, particularly when it is desired to avoid the use of actual capacitors in open-air installations. At the exact quarter-wavelength, or odd multiples thereof, the open line has zero reactance. As the length of the line is increased beyond a quarter-wave, the line becomes equivalent to an inductor, causing the current to lag. Finally at a half-wave or multiple half-wavelength the open-end line has an infinite reactance.

(3) A closed-end line, on the other hand, acts as an inductive reactance at lengths shorter than a quarter-wavelength. At an eighth-wave it has an inductive reactance numerically equal to its characteristic impedance, and at exactly a quarter-wave, or odd multiple thereof, it has infinite reactance. Between a quarter-wavelength and a half-wavelength the line becomes equivalent to a capacitor, and at exactly a half-wavelength, or

multiple thereof, the line has zero reactance. Circuit diagrams for all of the foregoing cases have already been shown in figures 342 and 343.

e. Shorted transmission line sections as impedance-matching devices.

(1) A parallel resonant circuit may be used to obtain an impedance match. For example (fig. 359①), if a voltage of the resonant frequency is applied across points A'–B', the parallel resonant circuit offers maximum impedance to the line, and, since the circuit is resonant, the impedance is the equivalent of a pure resistance. However, if the line voltage is applied across points C' and D', the L-C circuit remains approximately in resonance, but the impedance offered to the line is considerably lower. By proper choice of the points C' and D', the circuit may be matched to the exact line impedance, and the requirements for maximum power transfer met thereby.

(2) A transmission line may be used in the same way for impedance-matching purposes (fig. 359②). For example, it is desired to couple a resonant line to a nonresonant line. In order to be nonresonant, a line must be terminated in its characteristic impedance, and the terminating impedance should be approximately a pure resistance. The impedance of a shorted quarter-wave resonant section is zero at the shorting bar, increasing at points away from the shorting bar. Now, in order to adjust the section so that impedance across points C and D can be made equal to the characteristic impedance of the nonresonant line, it is necessary

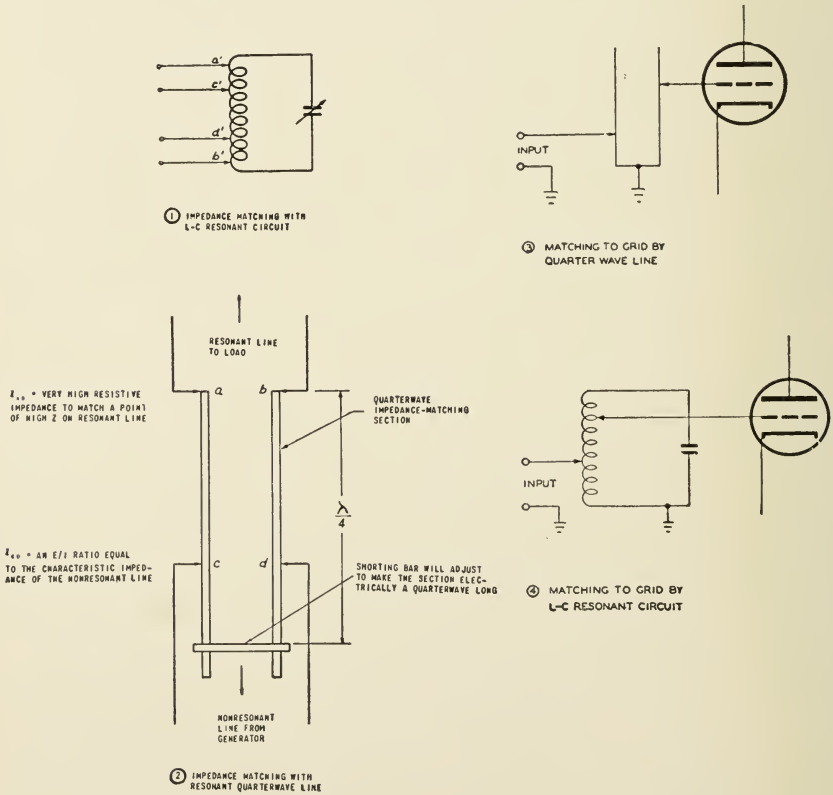

Figure 359. Impedance matching.

only to increase the distance between the bar and the points CD to increase the impedance, and to decrease this spacing to decrease the impedance. The impedance offered to the nonresonant line is resistive since the tuned section is resonant. It is assumed that the section is attached to the resonant line at A and B, and, therefore, the shorting bar is adjusted to make a voltage maximum appear at AB. This is done before the connections CD are adjusted for the correct match to the nonresonant line.

(3) A second example of the use of a shorted quarter-wave section as impedance-matching device, or transformer as it is sometimes called, is shown in figure 359③. Here a relatively low impedance input is transformed to a high impedance to match the high input impedance to a grid. The equivalent lumped circuit is shown in ④.

(4) A half-wave section of line shorted at both ends is also used as an impedance-matching device, particularly in antenna-coupling problems. For example, figure 360 shows a half-wave section excited at AB and having resonant current and voltage values as shown by the curves labeled E and I.

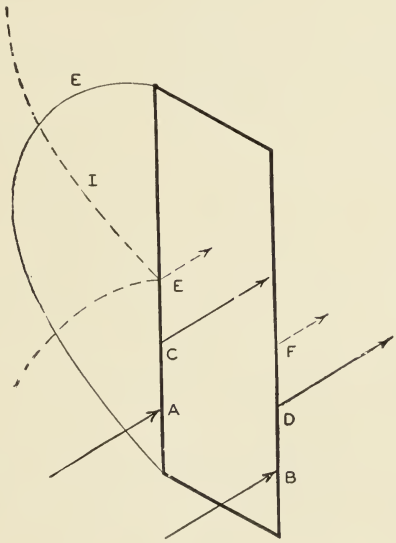

Figure 360. Shorted half-wave matching section.

The generator or input to AB sees an impedance equal to the E/I ratio at that point, or Z_{AB}, and the load or output looking into CD sees a larger E/I ratio, hence a larger impedance Z_{CD}. The greatest impedance will be obtained at EF where the voltage is highest and the current lowest. Conversely the lowest impedance points will be at the shorting bars where the current is high and the voltage low. Since the upper half of the half-wave section, or half-wave frame as it is sometimes called, repeats the impedance of the lower half, there will always be two points on the frame which have the same impedance. There will be a difference, however, in the phase of the currents involved, the current on one half being 180° out of phase with that on the other half.

f. Nonshorted transmission line sections as impedance-matching devices.

(1) If a quarter-wave section is not shorted but instead has an impedance of Z_s placed across one end of the section, the input impedance is

$$Z_S = \frac{(Z_O)^2}{Z_R}$$

where Z_S is the input impedance, Z_O is the characteristic impedance of the quarter-wave section, and Z_R is the terminating impedance. The equation may also be rearranged to give directly the characteristic impedance of the section providing both Z_S and Z_R are known. Thus

$$Z_O = \sqrt{Z_S \times Z_R}$$

In case it is desired to couple two transmission lines having different characteristic impedances, a quarter-wave section having a characteristic impedance given by the above formula can, therefore, be used as shown in figure 361.

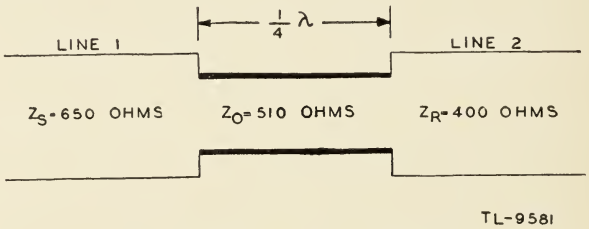

Figure 361. Line-to-line matching.

(2) For example, it is assumed that line 1 has a characteristic impedance, $Z_S = 650$ ohms, and line 2 has a characteristic impedance, $Z_R = 400$ ohms, as in figure 361. Then $Z_o = \sqrt{400 \times 650} = 510$ ohms, approximately. Line 1 sees an impedance of $\frac{(510)^2}{400} = 650$ ohms, and line 2 sees an impedance of $\frac{(510)^2}{650} = 400$ ohms.

(3) Similarly, a line could be matched to an antenna as shown in figure 362. Here $Z_o = \sqrt{550 \times 70} = 196$ ohms, approximately. In practice, matching sections of this nature, as well as those used to connect two

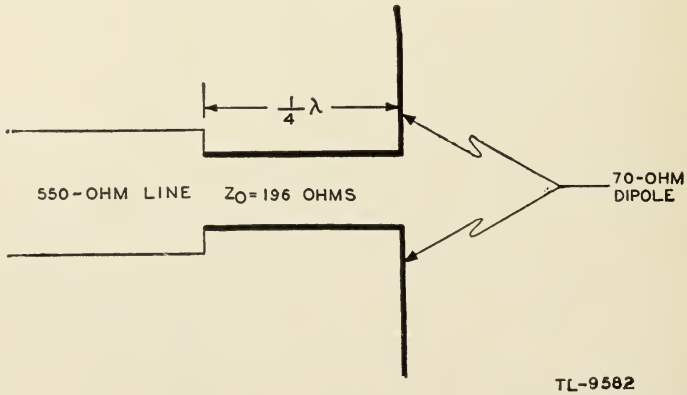

Figure 362. Line-to-antenna matching.

transmission lines, are frequently referred to as quarter-wave transformers.

(4) If a half-wave transmission line section is used instead of the quarter-wave section with a terminating impedance of Z_R, $Z_S = Z_R$ regardless of the characteristic impedance, Z_o, of the section (fig. 363①). Thus the half-wave section acts as 1-to-1 transformer and repeats at one set of terminals whatever impedance is present at the other (fig. 363②).

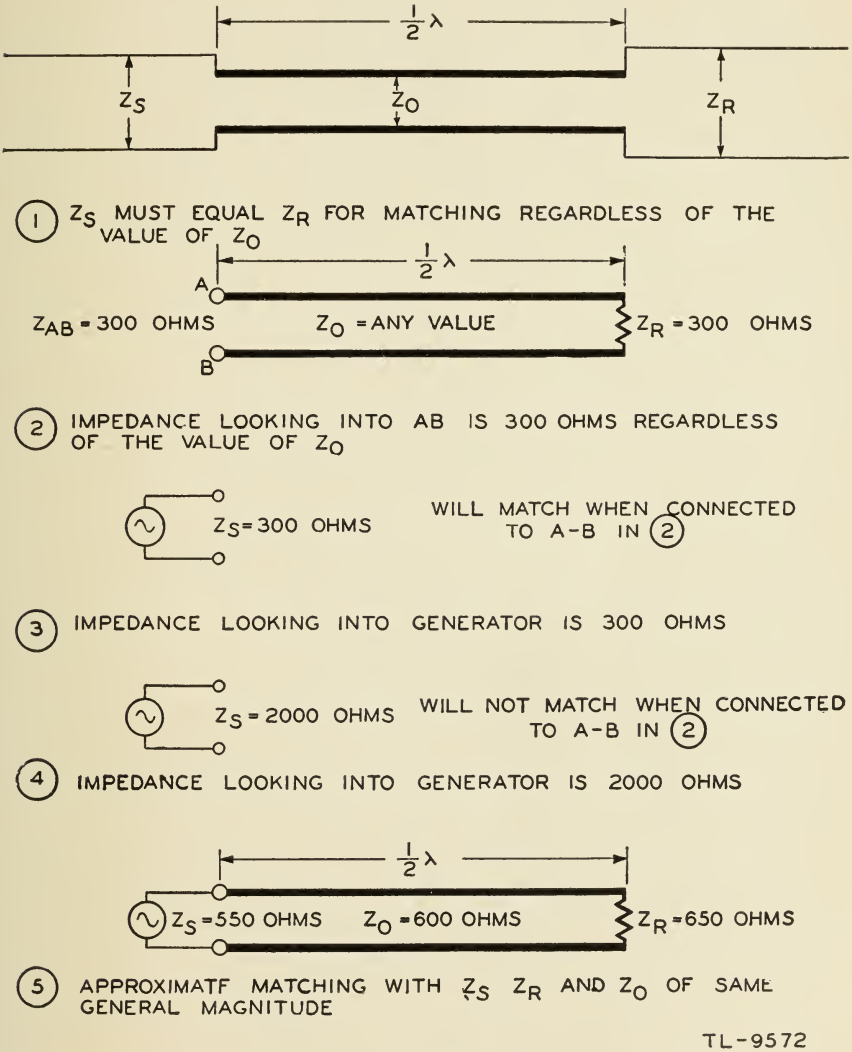

Figure 363. Matching with half-wave sections.

It cannot be used to connect with proper matching two lines, or a generator and a load, having widely different impedances (fig. 363④), but can be used without regard to the value of Z_o providing the two terminat-

ing impedances are the same as in figure 363③. If the three impedances Z_S, Z_R and Z_O have, however, the same general order of magnitude, a reasonably satisfactory match can be obtained as shown in figure 363⑤.

g. Use of stub lines in matching. (1) A transmission line several wavelengths or more in length is used frequently to feed a load such as an antenna array. In order to eliminate standing waves on the line, which result in increased losses, it is desirable to match the load or array to the line. A practical way of obtaining this match is by the use of a *stub* line section connected across the main transmission line at a location near the load end. Although both open and shorted stubs may be used, a shorted stub is generally employed because of the lowered radiation losses, and for the reason that it is easier to adjust and support.

(2) The stub is located on the main line (fig. 364①), at such a spacing from the load end that the main line, L_3, sees an impedance, looking into AB, of Z_o which is for all practical purposes a pure resistance. Reflection and standing waves are thereby eliminated on L_3. The impedance at AB will be made up of the impedances presented by L_1 and L_2

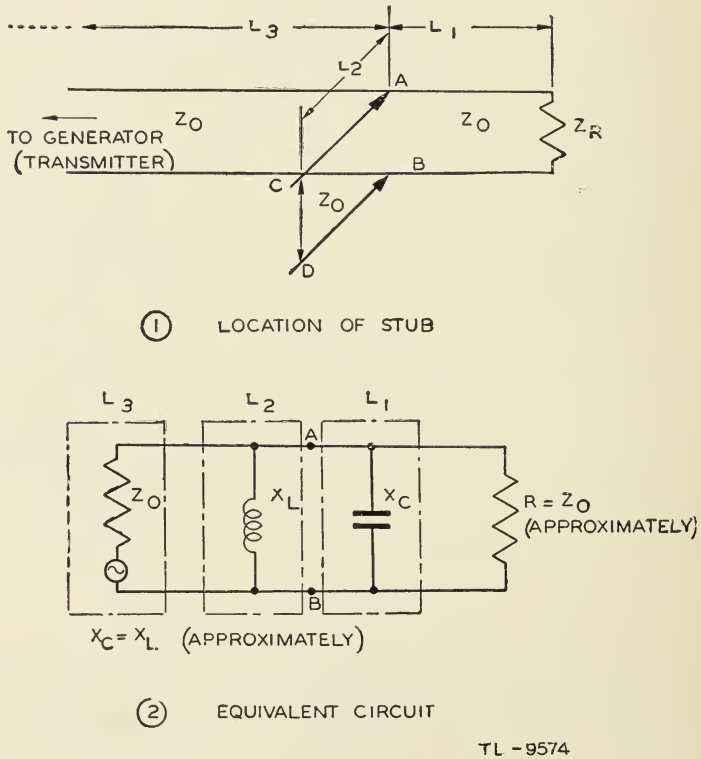

Figure 364. Shorted-stub matching.

in parallel. L_1 is of such length that its impedance at AB, made up of the load impedance Z_R and the characteristic impedance of L_1, Z_o, in combination, has a resistive component equal to Z_o, plus some reactive component. This reactive component, shown in ② as X_C, is present at

AB even if the load impedance is a pure resistance, since this impedance is not matched to L_1. The stub, which is normally less than $\frac{1}{4}\lambda$ long, has an impedance that is almost pure reactance. Therefore the stub length can be adjusted, at points C and D in ①, to resonate with the reactive component due to L_1. The result is that a resistance of Z_o remains across AB and the line L_3 is matched at that point. Figure 364② shows the equivalent circuit. It is assumed in all cases that the generator will match the line and that the line and generator can be represented as L_3 in ②.

(3) The location of AB and CD can be found by a "cut-and-try" method, but the operation is rather tedious. For instance, it is difficult to find experimentally the length of L_1 which will present across AB a resistive component equal to Z_o, and if this point were found, an adjustment of L_2 would cause the combined impedance to be incorrect and a new length of L_1 would be required.

(4) A much faster, simpler, and systematic method of correctly placing the stub is available as follows: By means of an r-f voltage indicator the voltage maximum point nearest the antenna is located. Similarly, at a distance of a quarter-wavelength from this maximum, a voltage minimum will be found. The *standing wave ratio* can then be determined:

$$\text{Standing wave ratio} = \frac{E \text{ max}}{E \text{ min}}$$

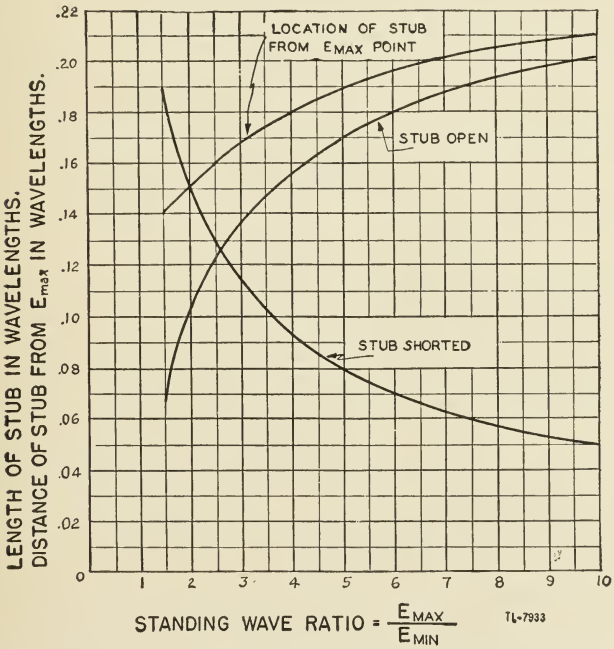

Figure 365. Determination of stub lengths for impedance matching.

By use of the graph of figure 365 both the stub location and the stub length in wavelengths can then be found with a reasonable degree of accuracy.

(5) For example it is assumed that a voltage maximum of 200 and a voltage minimum of 50 are found by the use of an r-f voltmeter. Their ratio will be $\frac{E\ \max}{E\ \min} = \frac{200}{50} = 4$. From the graph it can be readily determined that the required stub location is 0.18 wavelength from the voltage maximum point. If a shorted stub is used, its length will be approximately 0.092 wavelengths. On the other hand an open stub will have a length of 0.156 wavelengths. The stub location is from the voltage maximum *toward the generator* if the stub is *short-circuited,* and from the voltage maximum *toward the load* if the stub is *open-circuited.* All lengths shown on the graph of figure 365 are in wavelengths. Figure 366 shows the stub locations and the voltage waves on the line for both conditions.

(6) This method of determining stub lengths is difficult to put into practice because instruments for measuring accurately r-f voltages at

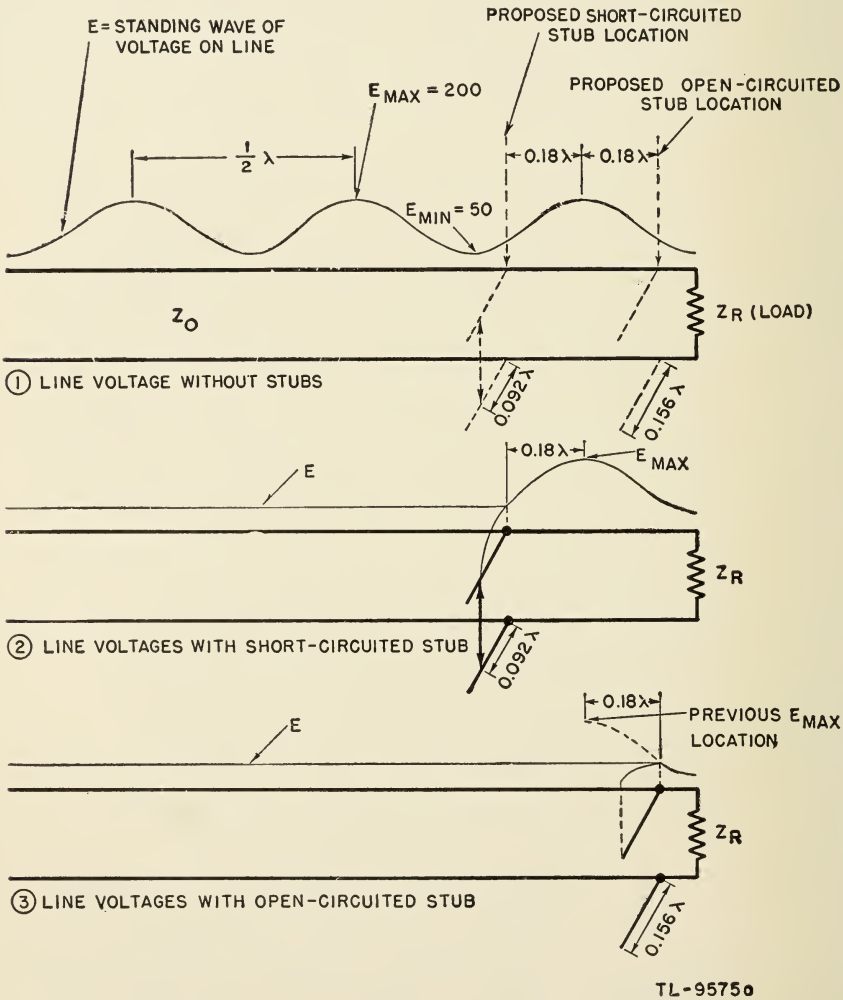

Figure 366. Application of single stubs in matching.

ultra-high frequencies are difficult to build. However, even a rough measurement with simple instruments will be helpful in that it will give an indication of approximate stub length and position. It is then a shorter process of cut-and-try to adjust the system to an impedance match than when no measurements at all are made.

(7) Under some conditions it may be easier to locate the current maxima and minima. These locations serve equally well for use with the graph if it is noted that a current maximum coincides with a voltage minimum and a current minimum with a voltage maximum.

(8) The principle of stub matching is applicable to coaxial lines as well as to parallel two-wire lines. However, in such case it is customary to use two stubs fixed in position along the line, each having a movable shorting plunger to vary the respective stub lengths. The two stubs are used to avoid the problem of moving the one stub along the line. The second stub adds capacitance or inductance to the line and thus varies the position of the standing waves. This produces the same effect on the first stub as if it were moved along the line. The two stubs are spaced either ⅛ or ⅜ wavelength apart and near the load as shown in figure 367.

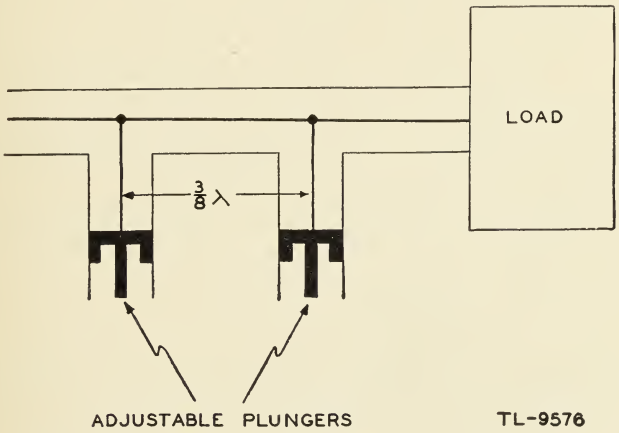

Figure 367. Application of double stubs on coaxial line.

h. Transmission line as phase-shifting and inverting device. (1) Transmission lines are used in many instances when two or more antennas are to be operated simultaneously from the same transmitter but with a phase difference between the two antenna currents. One means of providing the phase difference is by employing paths of different lengths between the transmitter and antennas. This method can be used because there is a progressive phase delay of 360° per wavelength along a *non-resonant* line. For example, if one line is ⅛ wavelength longer than the other, the phase difference is 45°. That is, a voltage or current maximum will arrive at the terminals of the longer line ⅛ of a cycle later than the corresponding maximum arrives at the terminals of the other. Figure 368 shows two antennas which have an 180° phase difference as the line to antenna No. 2 is a half-wavelength longer than the line to an-

tenna No. 1. The phase delay that occurs in a transmission line is dependable *only when no standing waves exist on the line.*

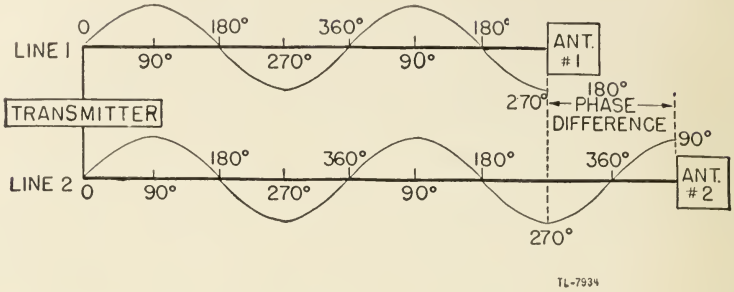

Figure 368. Use of lines of unequal length to obtain phase difference.

(2) In fact a half-wave line can be used as a phase inverter since it can act as a 1-to-1 ratio transformer in which the secondary voltage is 180° out of phase with the primary voltage (fig. 369①). When a half-wave line is used, the output voltage is 180° out of phase with the input voltage as shown in figure 369②.

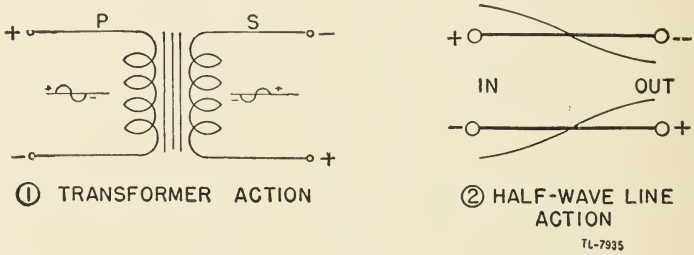

Figure 369. Phase inversion.

i. Frequency control of oscillator. (1) An important application of transmission lines is as a component in frequency-control circuits. Since quarter-wave short-circuited transmission lines may act as parallel resonant circuits, such lines may be substituted for the ordinary coil-and-capacitor circuits employed in oscillators. The advantages of lines used as tuned circuits in oscillators are high Q, low losses, and efficient oscillation at frequencies above those readily attainable with tank circuits made of ordinary coils and capacitors.

(2) The resistance losses of a well-designed transmission line are negligible at higher frequencies. The Q, or figure of merit of a line, is a ratio of its inductive reactance to its resistance. If the resistance is low for a given value of reactance, the Q is correspondingly high. The degree to which a resonant circuit controls the stability of frequency depends upon its Q, so that if a high degree of stability is desired, the tuned circuit must have a high Q. The Q of a concentric line is a maximum when the ratio of the inner diameter of the outer conductor to the outer diameter of the inner conductor is equal to 4.22. The Q of a two-wire line is a maximum when, the ratio of the spacing of the wires to the radius of one wire is 6.19. The Q of any line also best at an effec-

tive electrical length of approximately a quarter-wavelength, and it may be increased markedly in ultra-high-frequency applications by silver-plating the lines, since skin effect forces most of the current to flow in the surface of the metal.

(3) Certain transmission line characteristics are desirable in oscillator circuits. In a single-tube oscillator the concentric line is used frequently. For push-pull circuits, a balanced two-wire line or two concentric lines may be used. The concentric line has the added advantage that the inner conductor is shielded by the outer conductor which reduces unwanted radiation to a minimum.

(4) A simple form of line oscillator is shown in figure 370. This circuit may be tuned by means of the capacitor-shorting bar. It readily oscillates at the highest frequency of which the tube is capable.

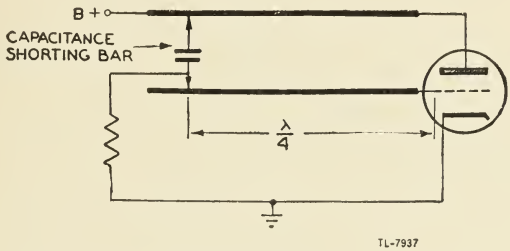

Figure 370. Simple transmission-line oscillator.

j. Coaxial line-balance converter. (1) In numerous instances it is necessary to join a coaxial line which is unbalanced to ground to a balanced line, such as a shielded pair. Such a transition cannot be made directly since the junction presents a discontinuity in the electrical characteristics of the line. This discontinuity would result in an excessive standing-wave ratio and the loss of considerable energy by radiation because of unbalanced line currents. To effect such a junction, a *bazooka* or line-balance converter is used customarily.

(2) The outer skin of the outside conductor of a coaxial line is at ground potential, whereas the outer skin of the inner conductor is well above ground potential and displays a comparatively high impedance to ground. Both conductors of the balanced line, however, display the same potential and the same impedance to ground under ideal conditions. Therefore the object of the bazooka is to produce a high impedance to ground between the *outside* of the outer conductor at the point where it connects to one side of the balanced line, and thus to convert the end of the concentric line to a balanced condition.

(3) This balanced condition can be obtained by placing a quarter-wave shield around the end of the coaxial line. This auxiliary shield is connected to the outer conductor of the coaxial line a quarter-wave from the end of the line (fig. 371). The outer shield is bonded firmly to the outside of the outer conductor of the coaxial line. Thus, the shield and the outer conductor form a quarter-wave section of coaxial line shorted at one end. Since the shorted quarter-wave section displays a high impedance between A and B, point A is isolated from ground and it can be connected to one wire of the balanced line, both conductors of which have a high impedance to ground. Figure 371③ shows the

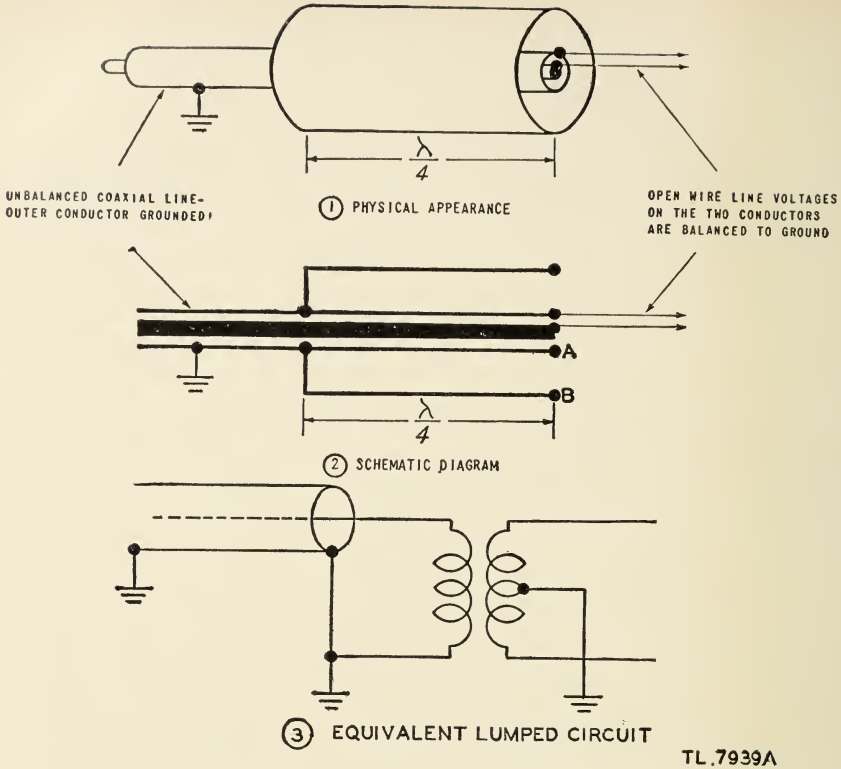

Figure 371. Line-balance converter (bazooka).

equivalent lumped circuit. The action of the bazooka, therefore, is similar to that of a 1-to-1 transformer having a primary grounded at one end and a secondary grounded at the mid-point on the winding.

84. ARTIFICIAL TRANSMISSION LINES. a. General. An artificial transmission line can be thought of as an electrical network, having input and output terminals and composed of lumped elements of inductance, capacitance, and resistance, which has similar characteristics to an actual transmission line.

b. Purpose. Although the primary purpose of a transmission line is to guide the transfer of energy from one place to another, in so doing the transmission line has other characteristics which may be useful in certain cases. For example, if a voltage is applied to the input terminals of a line, a definite amount of time passes before the voltage appears at the output terminals. In other words, the line has the ability to delay voltages and currents, and the longer the line the greater the delay. Therefore, if a voltage must be applied to the grid of a tube a microsecond or two after it has been applied to another part of the circuit, a length of transmission line could be placed ahead of the grid to give the necessary time lag. The only drawback is that actual transmission lines are usually rather bulky, and even if coiled up in compact form are still too awkward to use in a radio circuit.

c. Circuit. To avoid the bulk of an actual line, an artificial line may be built of coils and capacitors which has approximately the same characteristics as the line but occupies a smaller space. The circuit for an artificial line is shown in figure 372. The distributed inductance and resistance of the line are lumped in several choke coils, while the dis-

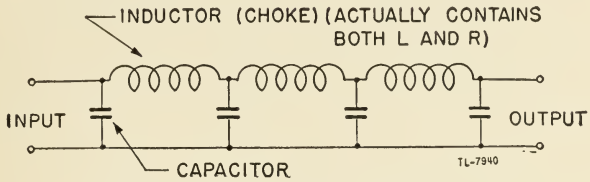

Figure 372. Artificial transmission line.

tributed capacitance can be represented by capacitors, and the conductance is omitted entirely as it is too small even to consider. If the action of the actual transmission line with its evenly distributed R, L, and C is to be closely approximated, the sections must be small and numerous. In most cases, however, from three to eight sections produce as much of the required transmission line action as is needed for use in radar time-delay circuits.

d. Other uses. (1) Artificial transmission lines also may perform other duties in addition to introducing time delay or phase shift. These duties include action as filters to block or pass certain frequencies, and as models for laboratory demonstration of transmission line action.

(2) One important use in radar is the storage of energy and the subsequent delivery of the same energy at a predetermined rate to form pulses. In figure 373, if switch S_1 is closed, S_2 remaining open, the artificial transmission line will charge through R to the voltage of E_B, the charge being retained on the capacitors as electrostatic field energy.

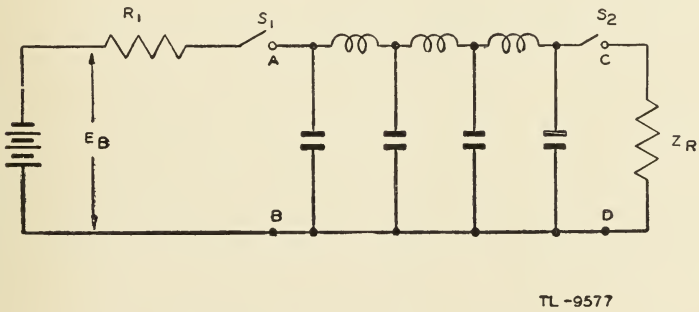

Figure 373. Artificial transmission line as an energy storage device.

Switch S_1 then is opened and S_2 closed. Immediately the line commences to discharge through Z_R. Since the combination of the distributed inductors and capacitors are acting as a transmission line, the voltage appearing at terminals CD is *not* E_B as might be expected, and the voltage does *not* decrease along some curve similar to an R-C discharge curve. The line, instead, acts as if the voltage E_B existing on the ca-

pacitors were divided between the characteristic impedance, Z_o, of the line itself and the load impedance, Z_R. If Z_o is made equal to Z_R, the voltage will divide equally and therefore the voltage at CD will be ½ E_B as shown in figure 374. When $Z_o = Z_R$, the voltage also will be main-

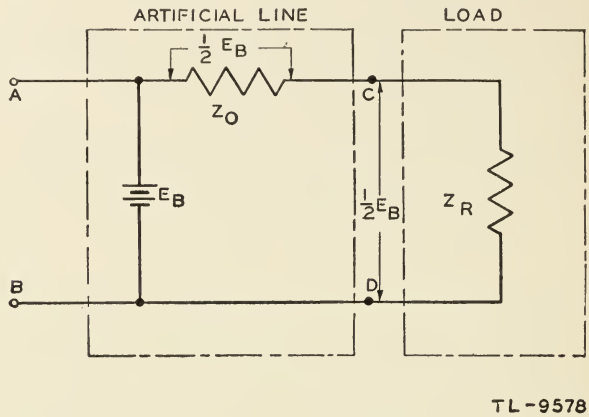

Figure 374. Equivalent discharge line.

tained at this constant value as long as any energy exists in the line. The output voltage at *CD*, then, will be a flat-topped pulse of energy as shown in figure 375.

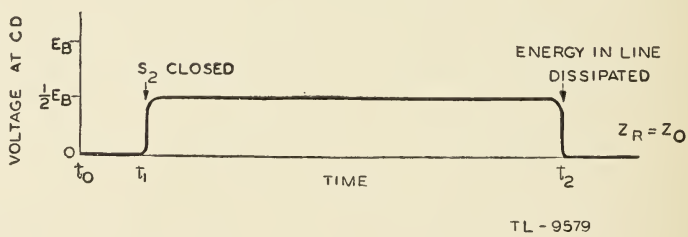

Figure 375. Waveshape of line discharge.

(3) The duration and voltage of the line discharge can also be explained by considering the equivalent discharge circuit of figure 376①. The artificial line can be represented by a section of transmission line between *AB* and *CD* while the load impedance Z_R can be represented as the infinite transmission line to the right, providing the characteristic impedances of both lines are equal to the load impedance; that is, $Z_o = Z_R$. In ② is shown the voltage existing on the section *AB–CD* produced by the static charge. As soon as switch S_2 is closed, a voltage wave X_1 starts to the right with a certain velocity and with a magnitude of ½ E_B. A similar wave X_2 starts to the left with the same velocity and value (see ③). The wave to the right sees an infinite line and continues at its definite velocity, but the wave to the left reaches an open circuit at *AB* and is reflected as a wave to the right again as in ④, still

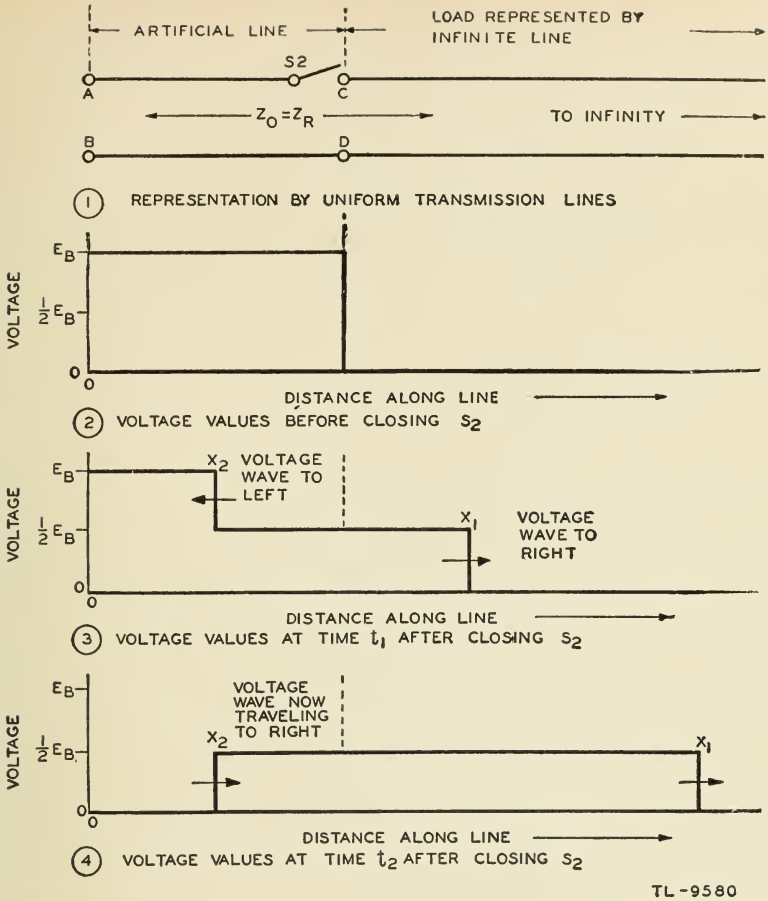

Figure 376. Voltage relations on discharging line.

with a value of ½ E_B. When the wave X_2 reaches CD all of the line energy has been removed from the artificial line, and has been transferred to the infinite line to the right of CD where there can be no further reflection of the waves. Since this line to the right of CD is actually the load impedance, this action means that the load has absorbed all of the stored energy at ½ of the original voltage and over a length of time equal to the time taken by wave front X_2 to go from CD to AB and back to CD.

(4) The artificial line just described will deliver, then, a constant voltage for a definite period of time to a load, in a similar way to the action of a battery rapidly switched on and off. Its advantage lies in the accuracy with which the magnitude and duration of the pulse of energy can be delivered, and in the extreme rapidity of the action. Accurate rectangular pulses of energy having a duration of a few microseconds are available from such lines. In practice arrangements of inductors and capacitors other than the one shown are also in use in radar sets.

SECTION XI

WAVEGUIDES AND CAVITY RESONATORS

---

85. INTRODUCTION TO WAVEGUIDES. a. General. (1) Electromagnetic waves may be classified roughly as either guided or unguided waves. Guided waves are those which follow a transmission line, such as a pair of parallel wires or a coaxial line. Unguided waves are those which are radiated from an antenna. Radio waves, which are unguided electromagnetic waves, then, travel along straight lines, except as they are refracted by changing electrical properties of the atmosphere. However, unguided waves may be concentrated in a relatively narrow beam by the use of a directional antenna, but the energy in even the narrowest beam is distributed over an increasing cross-sectional area as the distance from the antenna increases, because the rays of the beam are not parallel. The energy in a guided electromagnetic wave, on the other hand, is distributed over a relatively constant cross-sectional area throughout the length of the guiding wires. Because the guided waves follow the guiding wires around any number of bends, nearly all the transmitted energy reaches the destination.

(2) The conventional method of explaining the transmission of electric energy by wire treats an electric current as an electron motion within the wire. There is apparently no relation between this phenomenon and the propagation of radio waves in free space. However, transmission on wires may be explained perfectly well by a theory that is widely different from the conventional one. According to this theory, a potential difference exists between the wires of the transmission line because a voltage is induced in the wires by a varying electromagnetic field. This field surrounds each wire and travels along the wires at approximately the velocity of light. The induced voltage causes the electron motion which may be detected as a current in the wire. Thus, the voltage and current in the transmission line exist only because of the varying electromagnetic fields. Since this electromagnetic field is exactly the same as that radiated from an antenna, the two phenomena are closely related. Thus, the energy may be said to be carried by the electromagnetic field. The wires, then, do not carry the electric energy; they serve only to *guide* the electromagnetic waves which travel through the surrounding air or other insulating medium.

b. Types of waveguide. (1) Any surface which separates distinctly two regions of different electric properties can exert a guiding effect

on electromagnetic waves. Such a surface may be one which separates a conductor from an insulator, or one which separates two insulators of widely different dielectric constants.

(2) Some important types of waveguides are open metal wires; shielded metal wires; coaxial line; hollow metal pipe; dielectric rod. Although these are all waveguides because they are capable of guiding electromagnetic waves, the term *waveguide* is usually applied only to hollow pipes and dielectric rods. The two types of pipe that are in general use have either a rectangular or circular cross-section. The dielectric rod is not used extensively because its losses are great, and because the electromagnetic field cannot be wholly contained within the rod.

c. Advantages of hollow waveguides. (1) One reason for using a hollow waveguide is that it has lower loss than either an open-wire line or a coaxial line in the frequency ranges for which it is practical. An open-wire line has three kinds of loss: radiation loss, dielectric loss, and copper loss. In the coaxial line there is no radiation loss because the outer conductor acts as a shield which forces the magnetic and electric fields to remain within the space between the inner and outer conductors. Both the coaxial line and the hollow metal pipe are perfectly shielded lines, and therefore have no radiation loss.

(2) Dielectric loss in the insulating beads of a coaxial line is considerable at very high frequencies, but air has negligible dielectric loss at any frequency. Since hollow metal waveguides are usually filled with air, they have negligible dielectric loss.

(3) The third kind of loss is the copper loss. At high frequencies the current flows in a thin layer near the surface of the conductor. As the frequency increases, the thickness of this layer decreases, causing the copper loss to increase as the effective resistance of the conductor becomes greater. In a coaxial line most of the resistance and most of the copper loss is in the inner conductor because the circumference of this conductor is less than that of the outer conductor. For example, if the current flows in a layer 1/25,000 inch thick at the surface of the conductor, and if the circumference of the outer conductor is five times that of the inner conductor, the area through which current flows in the outer conductor is five times that of the inner conductor. Since the resistance of a conductor is

$$R = \rho \frac{L}{A}$$

where ρ is the resistivity of the metal, L is the length of the conductor, and A is the area of the cross section through which the current flows, the resistance of the inner conductor is five times that of the outer conductor. If the inner conductor were eliminated, the copper loss would be greatly reduced. A coaxial line without the inner conductor is a round hollow waveguide.

(4) Since the hollow pipe has less copper loss than a coaxial line, and since it has neither radiation loss nor dielectric loss, the total losses of a waveguide are less than those of a coaxial line of the same size operating at the same frequency. Thus the attenuation in a waveguide is less and the efficiency of transmission is greater than in a comparable coaxial line. Figure 377 illustrates the variation of attenuation with frequency for both a 3-inch round waveguide and a 3-inch coaxial line. Note that the attenuation of the waveguide becomes very great at ap-

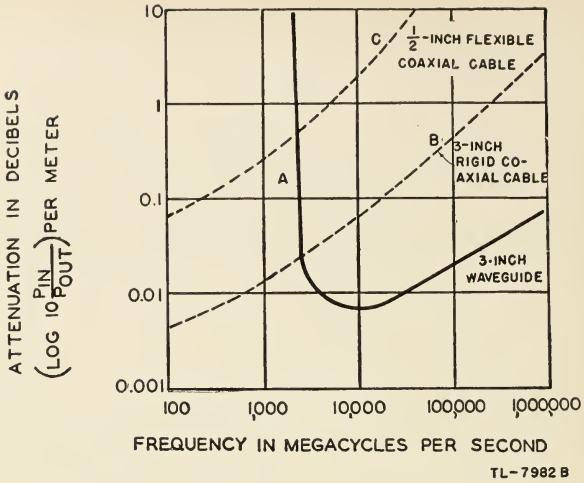

Figure 377. Attentuation of a 3-inch round waveguide compared to that of two coaxial lines.

proximately 2,500 megacycles per second. This frequency is called the *cut-off frequency* for this particular guide because this waveguide cannot transmit frequencies lower than this value. The attenuation increases as the frequency increases for all the lines because the skin effect forces the current to flow in a decreasingly thin layer, causing the copper losses to increase. However, note that the attenuation in the waveguide is considerably less than that of either coaxial line for frequencies above cut-off.

(5) A second reason for using a waveguide is that it is capable of transmitting higher power than a coaxial line of the same size. The power transmitted on a coaxial line without standing waves is

$$P = E^2 / Z_o,$$

where E is the voltage and Z_o the characteristic impedance of the line. The power transmitted on a given line can therefore be increased only by raising the voltage. However, if the voltage is raised too high, the insulation will break down. The length of the air path AB (fig. 378①) in a coaxial line determines the break-down voltage, which in turn fixes

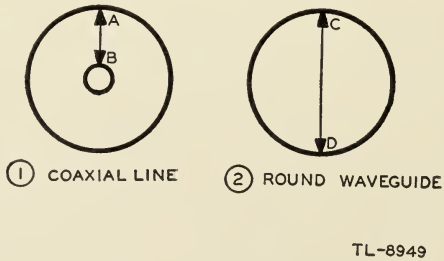

Figure 378. Comparison of break-down paths.

the power-handling capacity of the line. In a round waveguide operating in the dominant mode, the maximum voltage appears between

points C and D (fig. 378②). The distance between these points is obviously greater than the distance AB in a coaxial line of the same diameter. As a result, the power-handling capacity of the hollow pipe is greater than that of a coaxial line of the same size.

(6) The hollow pipe is simpler in construction than the coaxial line since the inner conductor and its supports are eliminated. Because there is no inner conductor which may be displaced or broken by vibration or shock, the waveguide is more rugged than the coaxial line.

(7) The advantages of hollow-pipe waveguides may be summarized as follows:

(*a*) Complete shielding.

(*b*) No dielectric loss.

(*c*) Copper loss less than that of a coaxial line of the same size operated at the same frequency.

(*d*) Greater power-handling capacity than for a coaxial line of the same size.

(*e*) Simpler construction than that of a coaxial line.

d. Disadvantages of hollow waveguides. (1) The minimum size of the waveguide that can be used to transmit a certain frequency is proportional to the wavelength at that frequency. The proportionality depends on the shape of the waveguide and the manner in which the electromagnetic fields are set up within the pipe. In all cases, however, there is a minimum frequency, called the cut-off frequency, that can be transmitted. As a result of this property, waveguides are not used extensively at frequencies below approximately 3,000 megacycles per second (= 10 centimeters) because at lower frequencies the physical size of the guide is too large. For example, to transmit 10 centimeter waves, a rectangular pipe would have to be wider than 5 centimeters. But for 1-meter waves the pipe would have to be 2½ feet wide, and for 10-meter waves. 25 feet wide.

(2) The installation and operation of a waveguide transmission system are somewhat more difficult than for other types of line. The radius of bends in the line must be greater than two wavelengths to avoid excessive attenuation. This fact may hamper installations in restricted spaces. If the guide is dented, or if solder is permitted to run inside the pipe when joints are made, the attenuation of the line is greatly increased. In addition to the increased attenuation that they cause, dents and beads of solder also reduce the break-down voltage of the waveguide. Although such faults may not cause actual arc-over in the guide, they limit the power-handling capacity of the system and make the possibility of arc-over more likely. Thus, unless great care is exercised in the installation, one or two carelessly made joints may nullify completely the initial advantage obtained from the use of the waveguide.

e. Boundary conditions and modes. (1) Since there is only one conductor, in the conventional sense of the word, in a waveguide transmission system, it is impractical to talk of the voltage and current distribution. The energy that is transmitted by the guide is contained in the electromagnetic fields within the pipe, so that in examining a particular waveguide, the magnetic and electric fields that can exist within it must be determined. An electromagnetic field is completely determined when the fields set up at the sources, and the shape, size, and location of all conduc-

tors and dielectrics which are wholly within, or which bound the field, are known. If the conductors and dielectrics are known, it is possible to state only the field configurations that may be excited, but not exactly which configuration will be excited by a particular source. Thus the field patterns that are possible in a given waveguide may be determined from the shape of the waveguide alone. Each of the possible field configurations is called a *mode*. After the modes have been determined, they may be examined to find which of them is most useful for a given application, and a suitable means of exciting this mode may be sought.

(2) One condition that must be met by the electromagnetic field within a waveguide is that the field must be continuous throughout the region in which the dielectric is the same. This condition requires that the frequency at which the field oscillates at one point in the waveguide be the same as the frequency at any other point. This condition is almost self-evident.

(3) The second and more important condition may be stated as follows: At the surface of a perfect conductor placed in an electromagnetic field which varies with time, *the electric field is perpendicular to the surface,* and *the magnetic field is parallel to the surface.* At high frequencies this is very nearly true for any good conductor, since the low resistance of the good conductor approximates the zero resistance of the perfect conductor. Stated in another way, these boundary conditions become:

(*a*) The component of the electric field *parallel* to the surface of a perfect conductor must be zero at the surface of the conductor. In more familiar terms, this condition states that the electric field, which is equivalent to a voltage, is short-circuited when it exists across a perfect conductor.

(*b*) The component of a time-varying magnetic field *perpendicular* to the surface of a perfect conductor must be zero at the surface of the conductor. In more familiar terms, this second condition indicates that when a varying magnetic field tends to cut through a conductor, a voltage is induced which sets up a current in the conductor. If the conductor is perfect, the magnetic field created by the current is exactly equal to the exciting magnetic field, but of opposite direction, so that the resultant field at the surface of the conductor is zero.

86. WAVEGUIDES DEVELOPED FROM TWO-WIRE LINES. a. Line with ordinary insulators. (1) Figure 379 shows a section of two-wire transmission line of the most simple construction supported on two insulators *A* and *B,* which may be made of plastic or porcelainlike material.

(2) From the viewpoint of the line, insulator *A* is merely an impedance Z_1 to ground, and insulator *B* is merely an impedance Z_2 to ground. Of course, these impedance values must be very high, because otherwise the line would be shorted or bypassed to ground in such a way as to interfere with its normal operation.

(3) Z_1 and Z_2 are not necessarily pure resistances. In fact, the average insulation material acts as a capacitive impedance, of which the resistive component is the dielectric losses and leakage resistance and the capacitive component exists because the line wire and ground act as capacitor plates with the insulator as the dielectric. However, the presence of capacitance as well as resistance in the insulation makes little difference in the usual installations as long as the total impedance is kept very high. Indeed it

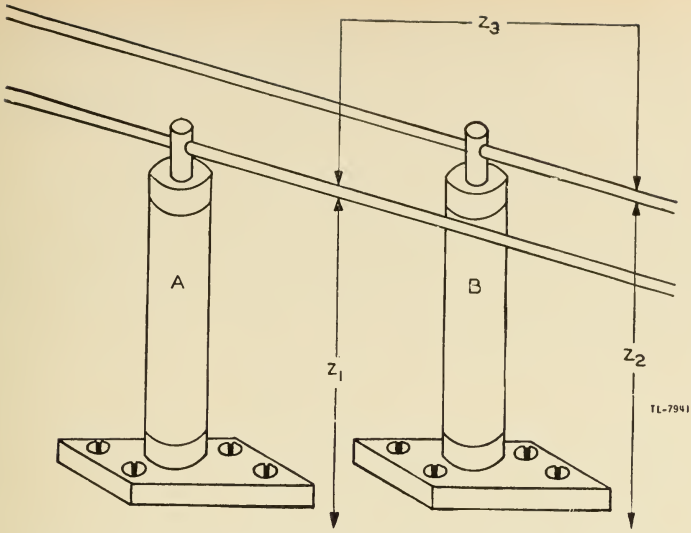

Figure 379. Two-wire transmission line with ordinary insulators.

would make no difference if the impedance were inductive, if it still were kept high. It is desirable to keep all insulator losses that produce waste heat as low as possible. Therefore the capacitive insulator should have high leakage resistance and low dielectric losses. The inductive insulator also should have high total leakage resistance.

(4) Since the wires have impedance to ground and the ground itself is a low impedance, the wires have an impedance between them. Therefore the wires look upon the terminals of the insulators A and B as the terminals of a high impedance Z_3 made up of the combined effects of the other impedances.

b. Line with quarter-wave insulators. (1) Because a quarter-wave line shorted at one end acts at the other end as a very high resistive impedance, it can be used as an insulator. Since the transmission line (fig. 379) regards its insulators A and B as merely two terminals between

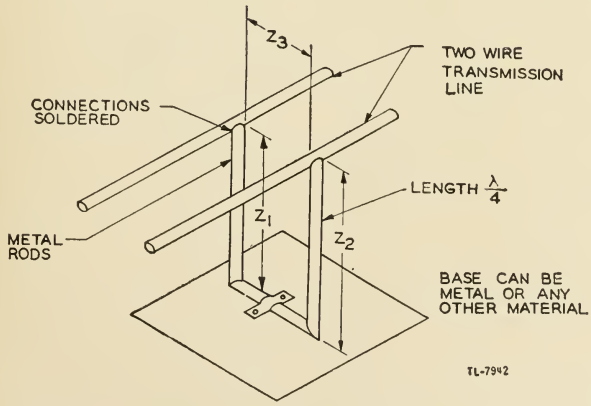

Figure 380. Two-wire transmission line with quarter-wave insulator.

which a high impedance exists, the line can very effectively be supported on a quarter-wave stub (fig. 380). In fact, Z_1, Z_2, and Z_3 now are higher than with the more conventional insulators because a quarter-wave line has lower losses. This quarter-wave line sometimes is called a *metallic insulator,* as has been described in section X.

(2) However, while the insulators in figure 379 may be used for a wide range of frequencies to be sent out over the line, the quarter-wave line may be used for only extremely high frequencies, and then for only one frequency or a very narrow band of frequencies. If a widely different frequency is used, the stub length is no longer a quarter-wave length long and therefore it no longer can act as an insulator because it does not offer a high impedance across the line.

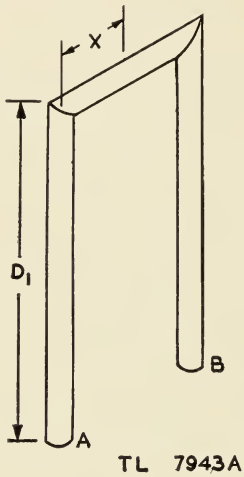

Figure 381. Quarter-wave insulator with shorting bar.

(3) In measuring the quarter-wavelength in figure 381, the distance $D_1 + X$ should be approximately equal to a quarter-wavelength to ob-

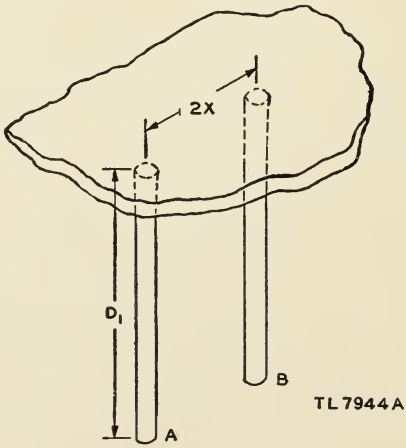

Figure 382. Quarter-wave insulator with shorting plate.

tain maximum impedance looking into terminals A and B. Unless X is small compared to D_1, the impedance per inch along X may be sufficiently different from that along D_1 to give considerable error because of the self-inductance of X.

(4) The situation is different in figure 382. Here two rods at A and B are suspended from a flat metal plate which extends over a considerable area. Very few magnetic lines of force can encircle this plate in the distance $2X$ compared to the number that could encircle the shorting bar of the same length in figure 381. Therefore the self-inductance along the plate is negligible compared to that along X in figure 381. Accordingly, the length of the shorting bar is not critical and may be neglected in calculating the length of the quarter-wave stub. Thus a rough rule is: When the lines of magnetic force cannot encircle the shorting bar (or yoke) the length of the bar is not critical.

(5) In figure 383 a two-wire line is suspended from an overhead steel plate by quarter-wave copper rods. From the viewpoint of the line the quarter-wave suspension loops are merely very high impedances. The line cannot discriminate between them and any other kind of high impedance, as long as the frequency remains at a constant predetermined value.

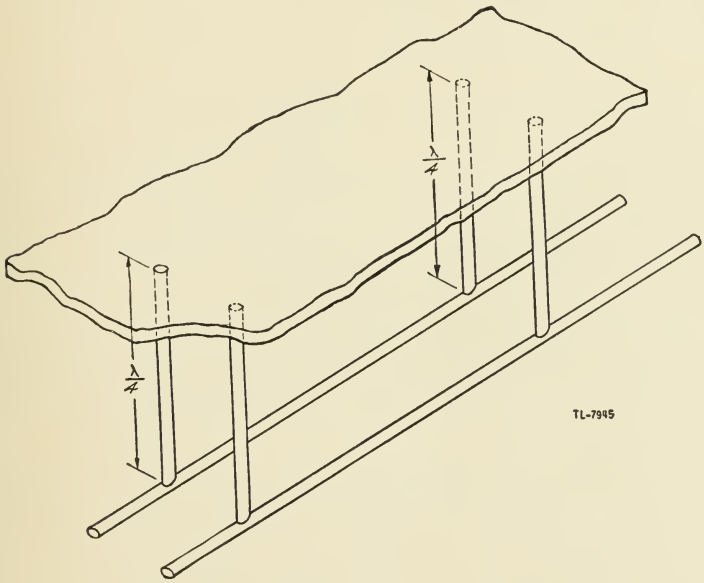

Figure 383. Two-wire line with quarter-wave insulators.

(6) Of course a metallic insulator such as the quarter-wave rod is an insulator only because of its action as a parallel resonant circuit, which of necessity must be over a very narrow band of frequencies. At low frequencies and for direct current, the ordinary metallic insulator is practically a short circuit. For example, in order to be a metallic insulator for a 60-cycle power line, the rods would have to be nearly 800 miles long. Although thus limited to very high frequencies in very narrow bands,

such insulators have the advantage of mechanical simplicity and unusually low power losses.

(7) In figure 384, a two-wire line is supported at both top and bottom by quarter-wave insulators. In effect, the line is placed at the center of a half-wave line shorted at both ends, which is called a half-wave frame. To consider the case in which two of these insulators are placed close together

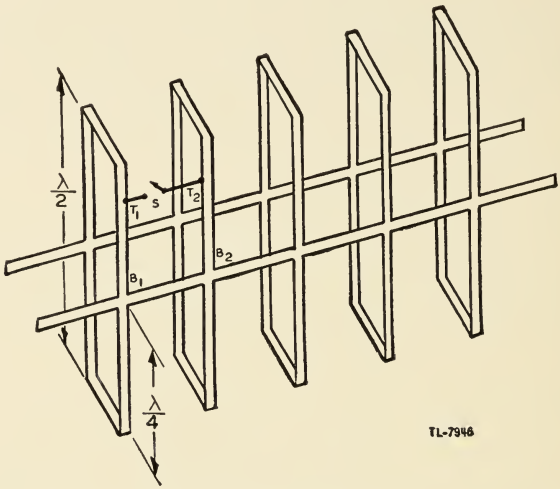

Figure 384. Two-wire line with double quarter-wave insulators.

or even are permitted to touch, suppose points T_1 and T_2 are connected through a wire and switch S. Since there is a standing wave of voltage on the frame at B_1, from line voltage at B_1 to zero at the shorting bar, T_1 is at a certain percentage of line voltage depending on the distance from the point to B_1. This same percentage holds for the point T_2 as regards the line voltage at B_2, since the distance $T_1B_1 = T_2B_2$. There is a voltage drop and phase shift from B_1 to B_2, if the power flow is to the right, but since the distances B_1B_2 and T_1T_2 are equal, the same shift appears along T_1T_2 whenever switch S is closed. Thus conductor T_1T_2 merely shunts the transmission conductors and provides a slightly lowered resistance path.

c. Waveguides as transmission lines. (1) If the quarter-wave supports of figure 384 are placed so close together that they touch at all points, a rectangular metallic tube is created. The original transmission lines now become part of the side walls of the tube and the top and bottom quarter-wave lines are the top half and the bottom half of the tube respectively (fig. 385). This solid structure, called a *waveguide,* can be thought of as being composed of two bus-bars and a multitude of quarter-wave insulators. Actually, for mechanical simplicity, the tube is made of sheet metal, rather than of metal rods which are soldered together.

(2) A waveguide generated simply by increasing the number of half-wave frames until they touch, carries not only one frequency but also all higher frequencies. This can be explained when figure 386 is considered along with figure 385. A waveguide may be considered as having upper and lower quarter-wave sections of metallic insulation and a

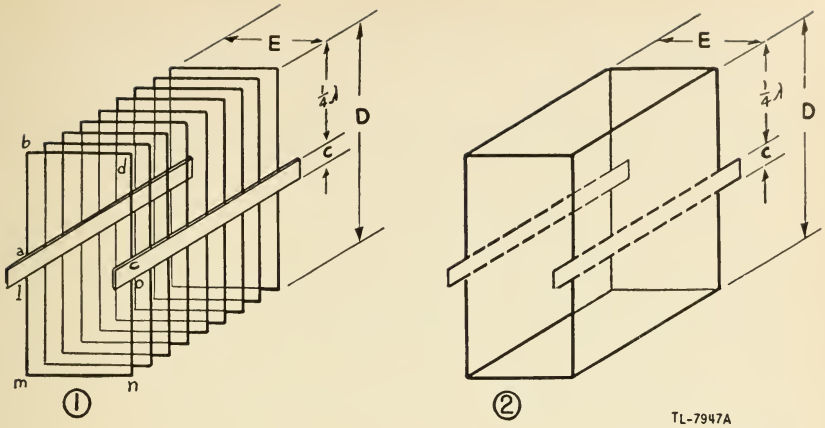

Figure 385. Waveguide near minimum frequency.

central section of bus-bar. In figure 385①, the distance $ab = cd = lm = on = \frac{1}{4}\lambda$, and the distance C = the width of bus-bar. In figure 386①, at some higher frequency the width of the bus-bar in effect is increased to C', while the quarter-wave insulators decrease in length until $a'b' =$

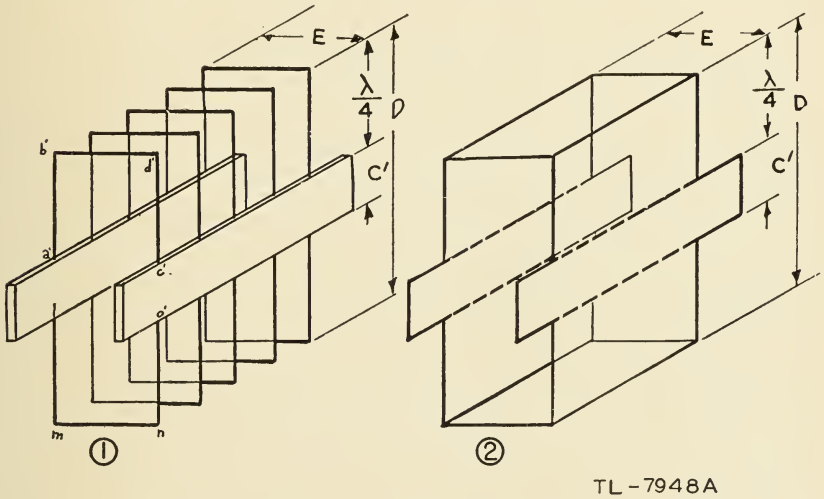

Figure 386. Waveguide above minimum frequency.

$c'd' = o'n' = \frac{1}{4}\lambda$ at the new frequency. Theoretically the waveguide could pass an infinite number of frequencies as the $\frac{1}{4}\lambda$ insulators approach the zero length and the bus-bar occupies the entire side of the guide. In practice this increase is limited by certain other factors.

(3) One important fact should be carefully noted. If the wavelength increases (frequency decreases) so much that the two quarter-wave insulators cannot be created within the distance D shown in figures 385② and 386②, the insulators automatically become less than a quarter-wave-

length. In this case, instead of being high resistive impedances, they become much lower inductive impedances, and the current flow is rapidly shorted out. As shown in figure 387, the effect of $^3/_{16}$ wavelength would be to destroy the insulator effect by placing inductance across the line which would stop transmission. Thus a waveguide transmits a minimum frequency, called *out-off frequency,* plus all higher frequencies.

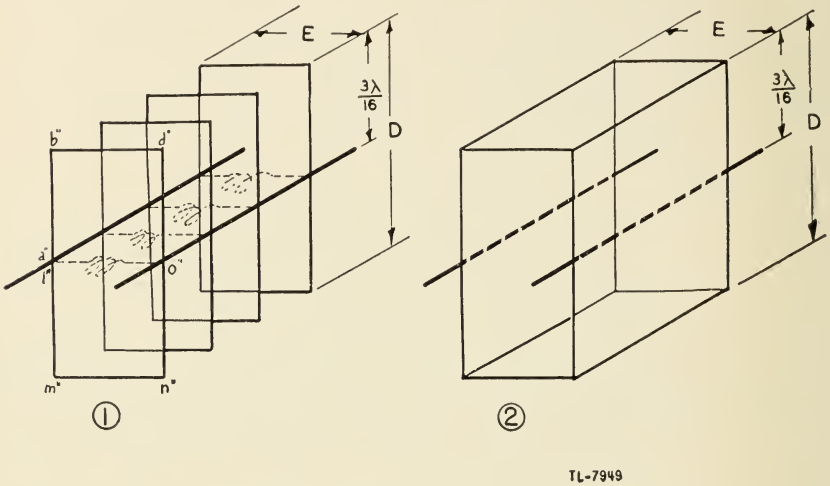

Figure 387. Waveguide below minimum frequency.

(4) When the line becomes closed to form a waveguide, the lines of magnetic force no longer can link the yoke portion of the metallic insulators. Therefore the distance E in figures 385, 386, and 387 is not critical with regard to frequency. However, this distance between the bus-bars determines the voltage at which the waveguide arcs over. Therefore, for high power and voltage, the distance E should be large. In practice, E may be from 0.2 to 0.5 times the wavelength in air, while for good operation D may be about 0.7 times the wavelength in air. These dimensions are for the inside of the rectangular guide.

87. ELECTROMAGNETIC FIELDS IN WAVEGUIDES. a. General. The energy that is transmitted by a waveguide is carried in the electromagnetic fields within the guide. Since the electric field is zero wherever it is parallel to the metal surface of the guide, no part of this field can penetrate the metal. In the same way, the varying magnetic field is zero at the surface of the metal wherever it attempts to penetrate the walls of the guide, so that no part of the magnetic field can get outside the guide. Therefore, all of the energy in the field is wholly contained by the guide. Thus, measurements on the outside of the guide can detect neither oscillating electrons nor any electromagnetic fields caused by the electrical energy within the waveguide.

b. E lines. (1) The way in which energy can be put into, transmitted through, and taken out of waveguides is understood better when the electric and magnetic fields within the guide are explained. Figure 388 shows a section of transmission line, shorted at both ends, which is 1½ wavelengths long at some particular frequency. Assume that this line is

energized from a generator at the center and is supported top and bottom by quarter-wave insulators. Since the line is shorted, reflections occur which lead to the establishment of standing waves of current and voltage.

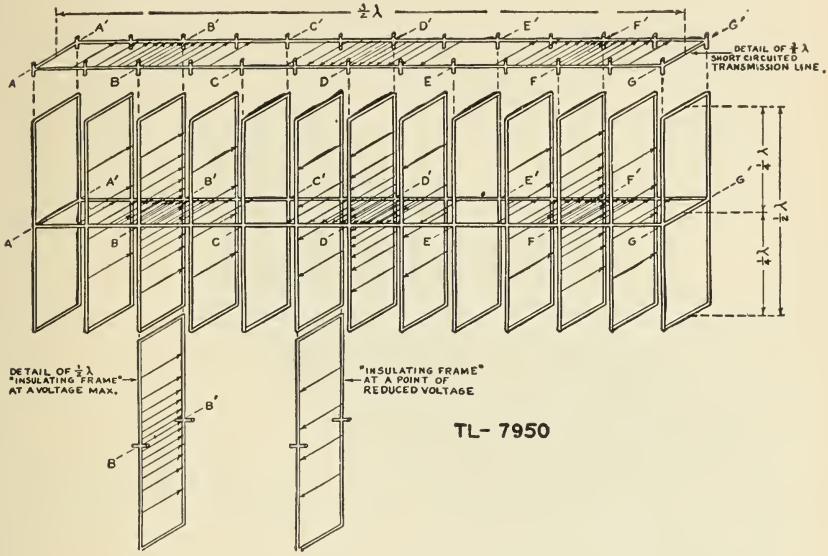

Figure 388. Voltage distribution in an energized short-circuited section of transmission line supported by ½ λ = insulating frames of conducting material—diagrammatic.

Likewise standing waves of current and voltage exist on the quarter-wave sections. For clarity, figure 388 shows only the voltage distribution for the insulating frames and for the line at a point in the cycle when all voltages are greatest.

(2) The arrows show E lines which represent the electric field between conductors, and the arrowheads show the direction of the field at the particular instant represented by the diagram. The density of the lines shows the intensity of the electric field. The magnetic field, which of course is also present, will be shown in a following diagram to avoid making this picture too complex. Note that the maximum voltages in the standing wave occur at BB', DD', and FF'. The various insulating frames are excited to resonance by the line and hence have as their maximum whatever the voltage across the line is at the point where the frames are attached. The two frames shown below the main section of the line indicate that the maximum voltage is different for different positions along the line. It is very important to repeat at this point that E lines are always perpendicular to conducting surfaces.

(3) The transmission line in figure 388 may be developed into a waveguide closed at each end by adding half-wave frames until surfaces are formed. Figure 389 shows the electric field in such a waveguide. The standing-wave distribution on the quarter-wave insulators combines with that on the transmission-line conductors to form an electric field of high intensity in the center of each half-wave section. Since the ends

of the guide are closed, the electric field exists in a standing wave, much as the voltage on a short-circuited transmission line is a standing wave. The *E* lines diminish to zero, build up to a maximum in the opposite direction, decrease to zero, and build up again, as shown in figure 389. These events occur in step with the frequency, but the lines always maintain the same *maximum* density or voltage value at any one location along

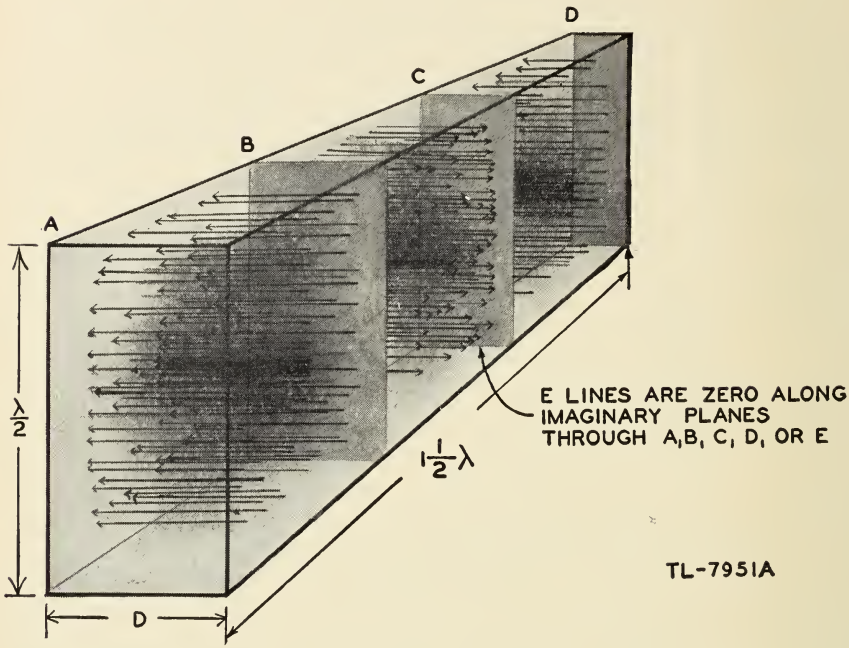

Figure 389. Electric field pattern.

the standing wave. An *r-f* voltage exists between the sides of the waveguide on which the electric field terminates. Since the field intensity is zero along the imaginary planes at *A, B, C.* and *D,* the r-f voltage is also zero. But in the center of the guide halfway between *A* and *B, B* and *C,* or *C* and *D,* the field intensity is maximum, making the voltage across the guide also maximum. The distance *D* therefore must be sufficient to keep the maximum voltage from causing arc-overs in the guide at these locations.

c. H lines. (1) The same transmission line of figure 388 is shown in figure 390 with only *H* lines, while the *E* lines are omitted to avoid confusion. The *H* lines represent the magnetic flux lines, which *must form complete loops,* and are always *perpendicular to the E lines. H* lines at a conducting surface are always parallel to that surface. The number or density of the lines in the figure indicates the intensity of the magnetic field.

(2) These lines are shown forming loops inside the frame rather than encircling each conductor of the frame or of the transmission line. As long as there is considerable space between the conductors many of the lines do encircle the conductors as in figure 391① and also as in the coil

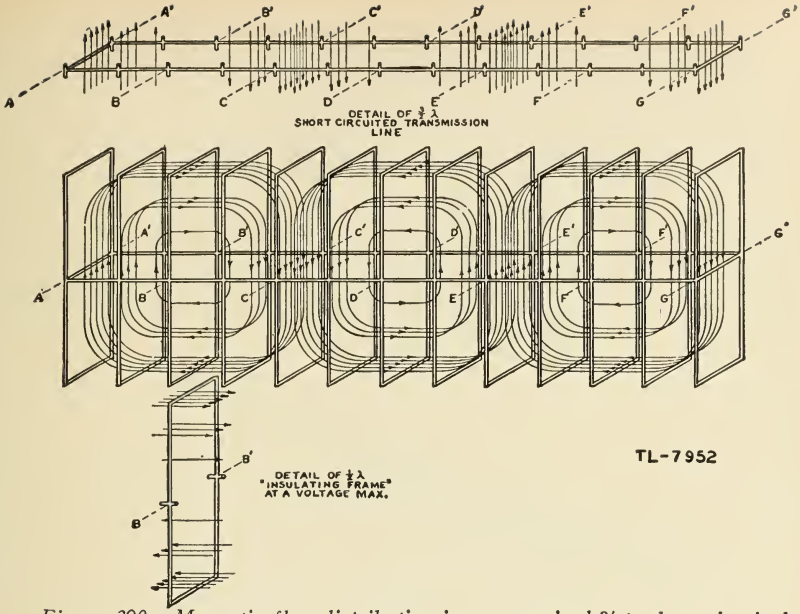

Figure 390. Magnetic flux distribution in an energized 3/2 λ short-circuited transmission line supported by 1/2 λ minus insulating frames of conducting material—diagrammatic.

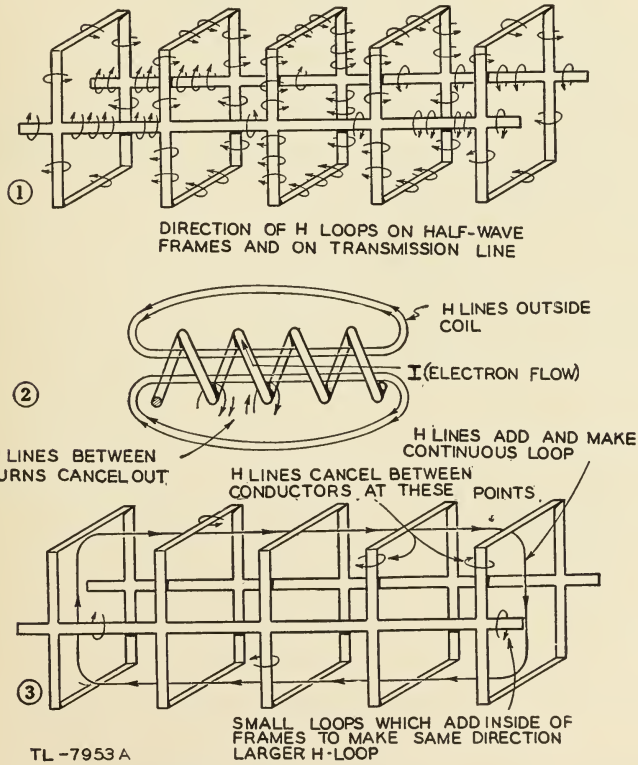

Figure 391. H line closures.

of figure 391②. But if the conductors are close together, the H lines cancel each other between conductors and add inside the frames or inside the turns of the coil.

In a closely wound coil the H lines form loops by closing outside the coil as in figure 391②, but in the frame of ① the direction of the arrows is such that the resulting H loops are entirely inside the frames as in ③.

(3) If the line and insulating frames of figure 390 are developed into a solid-walled metal waveguide closed at both ends, the distribution of H lines is as shown in figure 392. These H lines or lines of magnetic flux appear as magnetic "whirlpools" spaced a half-wavelength apart, each group reversed in direction. There are no H lines outside the waveguide as long as it is completely closed in.

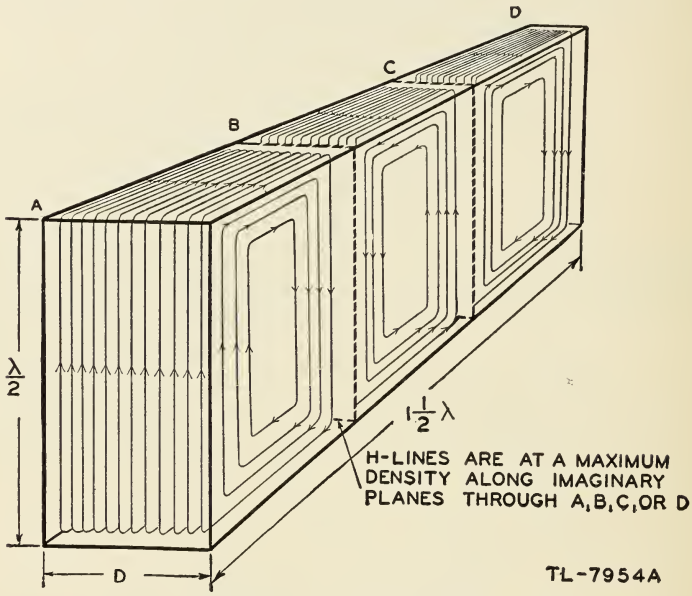

Figure 392. Magnetic field pattern.

d. Modes of transmission. (1) Although the E or H lines have been considered separately, both actually exist at the same time and in the same

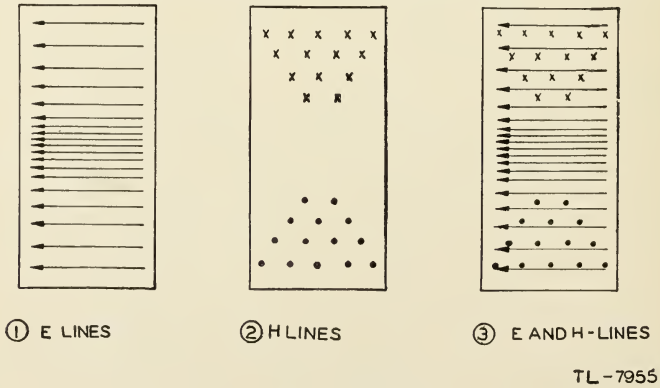

Figure 393. End view of waveguide showing pattern of E and H lines.

space within a waveguide. However, three-dimensional drawings showing the distribution of both sets of lines in the same space are too confusing to be of use. Therefore, cross-section drawings of the guide are used customarily. For example, if the guide in figure 389 is cut crosswise halfway between *A* and *B*, the *E* line distribution is shown in figure 393①. Similarly, if figure 392 is cut between *A* and *B*, the *H* line distribution is shown in 393②. The combination of the two is shown in figure 393③. Arrows which go into the plane of the paper are shown by small *x*'s for the tails of the arrows; those which come out of the plane of the paper are shown by dots for the points of the arrows. Figure 394①, ②, and ③ show diagrams for a side view of the guide with the same field pattern.

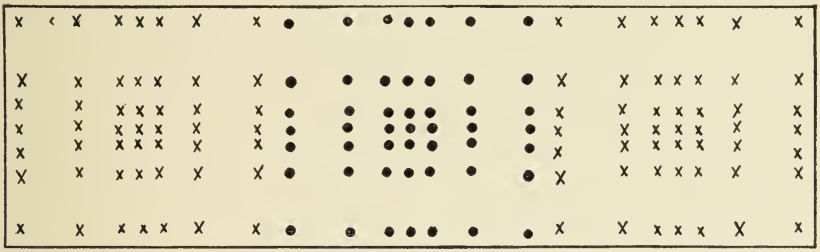

① E LINES

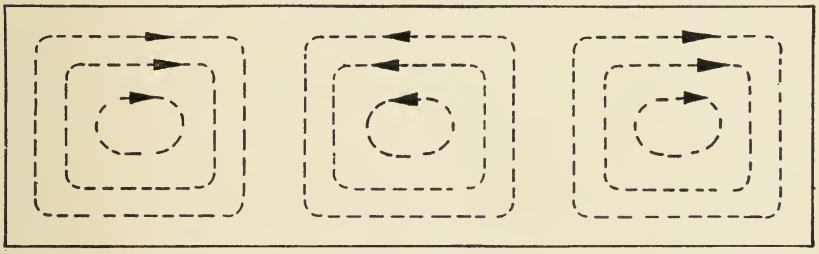

② H LINES

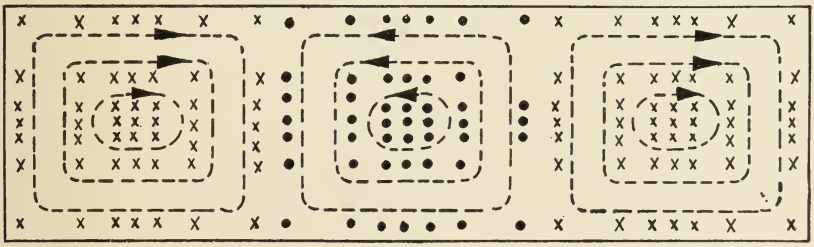

③ E AND H PATTERN TL-7956A

Figure 394. Side view of waveguide showing pattern of E and H lines.

(2) It has been pointed out that the configuration of the electromagnetic fields within a waveguide can take many forms. Each of these forms is called a *mode* of operation. For convenience of reference, a system has been devised to describe these modes. In all cases either the magnetic or the electric field must be perpendicular to the direction of propagation of energy. Therefore, any mode can be classified as either *transverse electric,* abbreviated TE, or as *transverse magnetic,* abbreviated TM. In a transverse electric mode the electric field lies across the guide and no E lines point lengthwise along the guide. Similarly, in a transverse magnetic mode the H lines form loops in planes perpendicular to the walls of the guide, and no part of an H line is lengthwise along the guide.

(3) In addition to the letters TE or TM, subscript numbers are used to complete the description of the field pattern. In describing field configurations in rectangular guide, the first number indicates the number of *half-wave patterns* of the *transverse* lines which exist along the short dimension of the guide through the center of the cross-section. Transverse lines are those which lie in a plane perpendicular to the walls of the guide. The second number indicates the number of transverse *half-wave patterns* that exist along the long dimension of the guide through the center of the cross-section. In case there is no change in the field intensity—that is, no pattern along one dimension—a zero is used.

(4) For a circular waveguide, the first number indicates the number of *whole* (or full-wave) *patterns* of the lines encountered around the circumference of the guide. The second number indicates the number of *half-wave patterns* that exist along a diameter.

(5) To understand how this system can be applied, examine the field patterns shown in figures 393 and 394. First it must be determined which field is the transverse field. Examination of figure 393 indicates that the electric field is perpendicular to the broad sides of the guide. As a further check that none of the E lines lie along the guide, examine figures 389 and 394. It is established that the *electric field* is transverse, and the mode must then be a TE mode. In order to determine the subscript numbers, examine figures 393③. It is seen that there is no change in the *electric* field intensity along the short dimension through the center. That is, there is no pattern, and the first descriptive number is therefore 0. Along the long dimension through the center the electric field intensity goes from zero at the bottom through a maximum at the center, and back to zero at the top of the cross-section. The field distribution along the vertical line, then, is of the form of a half sine wave, so that one half-wave pattern may be said to exist in this direction. Thus, the mode shown in figure 393 is $TE_{0,\,1}$.

(6) Six possible modes for both rectangular and round waveguides are shown in figure 395. Note that in ④ and ⑥ the modes are transverse magnetic in spite of the fact that the E lines appear to be transverse. In both of these cases part of the E lines lie along the axis of the guide, so that the electric field is not truly transverse. In order to provide further examples of the system of mode description, the number of half-wave and full-wave patterns is indicated for each guide. In addition, the expression is given for determining the maximum wavelength (λ_c = cut-off wavelength) that can be transmitted by each waveguide operating in the mode shown.

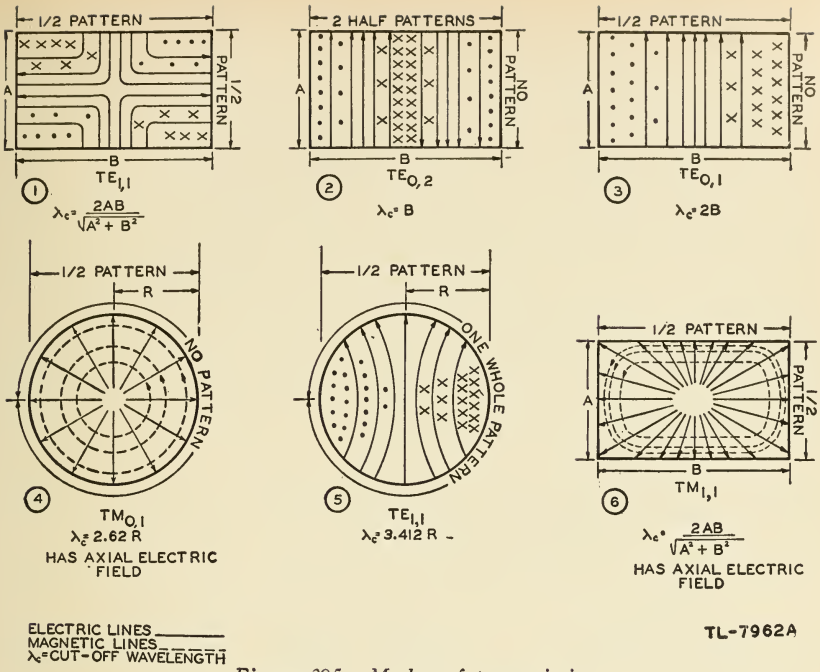

Figure 395. Modes of transmission.

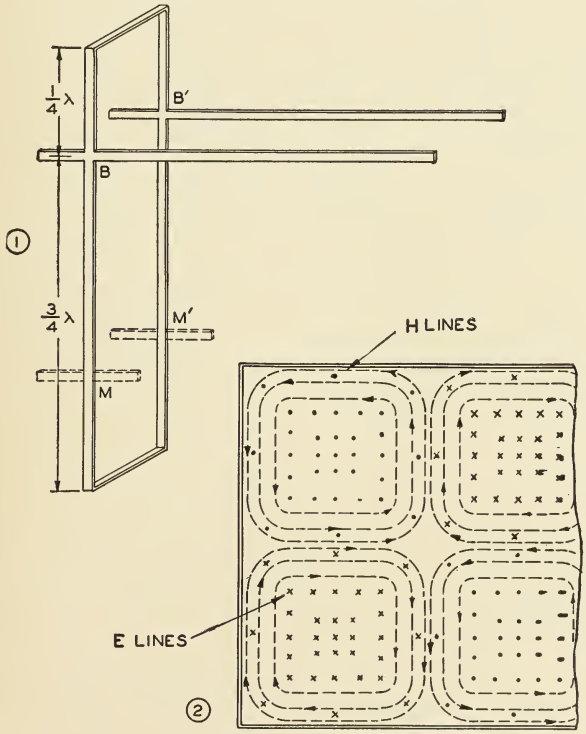

Figure 396. $TE_{0,2}$ mode for a rectangular waveguide.

(7) The way in which a waveguide may be developed for operation in the $TE_{0,2}$ mode is illustrated in figure 396①. In this case a two-wire transmission line is supported at B and B' by a quarter-wave insulator on the top and a three-quarter wave insulator on the bottom. If this arrangement is developed into a waveguide by adding insulating frames to form a surface, a waveguide is produced in which the field pattern is as shown in figure 396② and 395②. For a guide of the same size as that in figure 393, the cut-off frequency is now doubled, and one complete wavelength exists between the top and bottom of the guide. This guide may be considered to be made of two transmission lines that are separated by a half-wave section on one side and a pair of quarter-wave insulators at BB' and MM'. Of course, higher frequencies than cut-off may be passed by the guide, as the width of the transmission line elements at BB' *and* MM' can be increased in order to shorten both the quarter-wave insulators and the half-wave separators. The thickness of the guide is not critical, but must be great enough to prevent arc-over.

(8) Other modes can also be developed by the use both of an odd number of quarter-wave lengths and of different shapes of sections. Figure 397 shows how a waveguide shaped like a pipe or tube can be

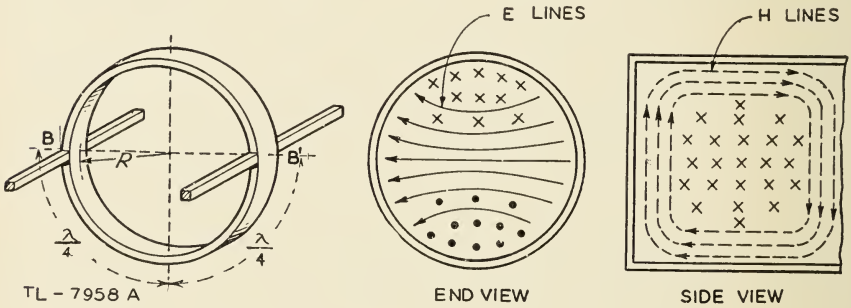

Figure 397 $TE_{1,1}$ mode for a round waveguide.

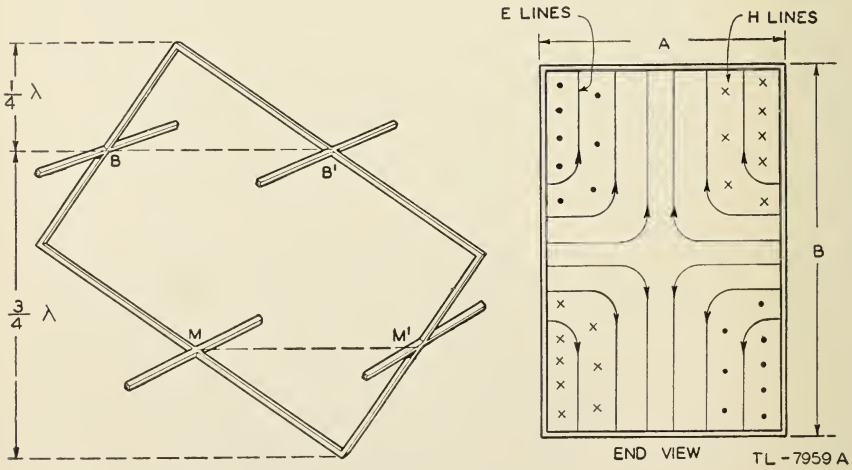

Figure 398. $TE_{1,1}$ mode for a rectangular waveguide.

developed by the use of two quarter-wave semi-circular elements which meet the line conductors at BB′. This mode is called $TE_{1,1}$ for the circular guide, and is almost the same as $TE_{0,1}$ for the rectangular guide (fig. 395③ and ⑤). The maximum wavelength (cut-off frequency) that can be transmitted in this circular guide is 1.70 times the diameter.

(9) Figure 398 shows the development of a mode similar to the TE_{02} mode for the rectangular guide except that insulating elements having 90° angles are used. In this case the quarter-wave dimension is as shown and the wavelength for cut-off (λ_c) can be calculated from the formula shown in figure 395① for λ_c.

(10) Figure 399 shows a different method of obtaining a mode. In ① a half-wave frame (two quarter-wave insulators joined at the high impedance point) is in resonance. If the distance X across the ends of the quarter-wave insulators is extended as in ② to some multiple of a half-wavelength, standing waves occur across the shorting bar, X, as well

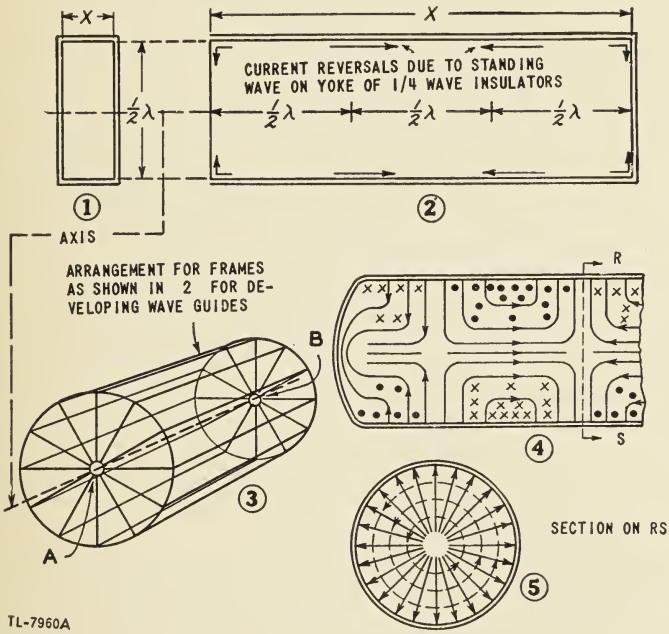

Figure 399. $TM_{0,1}$ mode for a round waveguide.

as along the side of the insulator. If several insulators now are attached to small disks at A and B, the diagram at ③ results. Then if the spaces are filled with additional insulators, a waveguide is produced having a pattern lengthwise as in ④ and crosswise as in ⑤. Transmission at frequencies higher than the frequency which forms a half-wavelength across the diameter of the guide can be accounted for by the assumption that there are circular disks at each end. These disks, then, may be increased in diameter in order to maintain the quarter-wave insulator effect from the edge of the disks to the outside edge of the guide. This mode is called $TM_{0,1}$ for a circular guide (fig. 395④). The $TM_{1,1}$ mode for a

rectangular guide is very similar and can be developed in a similar way as indicated in figure 400.

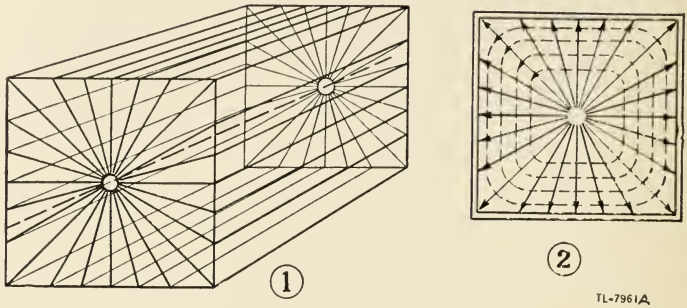

Figure 400. $TM_{1,1}$ mode for a rectangular waveguide.

e. Energy transmission through waveguides. (1) Thus far the waveguides have been assumed to be closed at each end. Standing waves, then, are present both lengthwise and crosswise in the guide. For example, figure 394③ shows the pattern for such standing waves. The maximum density of the E lines is separated 90 electrical degrees from the maximum density of the H lines, because the energy is not traveling down the guide but merely reflecting back and forth in the guide. The condition is similar to the 90° phase difference between the voltage and current in a short-circuited transmission line.

(2) If a very long waveguide is available with a means of introducing and removing energy without setting up any reflections, the standing waves disappear in the direction in which the energy travels, but can be considered as remaining on the insulating sections. This condition can be represented by moving the E line maxima along the guide until they are at the same place as the H line maxima, which corresponds to the condition on a transmission line when voltage and current are in phase. Then consider the complete pattern moving down the guide at some velocity less than that of light. The result is that energy is delivered as on a properly terminated transmission line.

(3) Although it is a fundamental law of physics that there can be no real velocity greater than the velocity of light, the apparent velocity in a waveguide seems to violate this law. Actually, the velocity of propagation of the energy down the pipe, called the *group velocity,* is somewhat less than that of light. However, superimposed on the travelling electromagnetic waves is a variation of field intensity which appears to move at a much higher velocity. That this superimposed velocity of a *change* of field intensity, called the *phase velocity,* can exceed the group velocity can be explained rather simply by considering a caterpillar. The caterpillar moves along as a group, and the rate at which his whole body moves over the ground is his group velocity. However, in the process of moving, little ripples or waves proceed up and down his back at a much greater velocity, which may be considered his phase velocity.

(4) Since the point of maximum field intensity, but not the actual energy, moves down the waveguide at the phase velocity, the apparent wavelength in the guide is greater than the wavelength in free space.

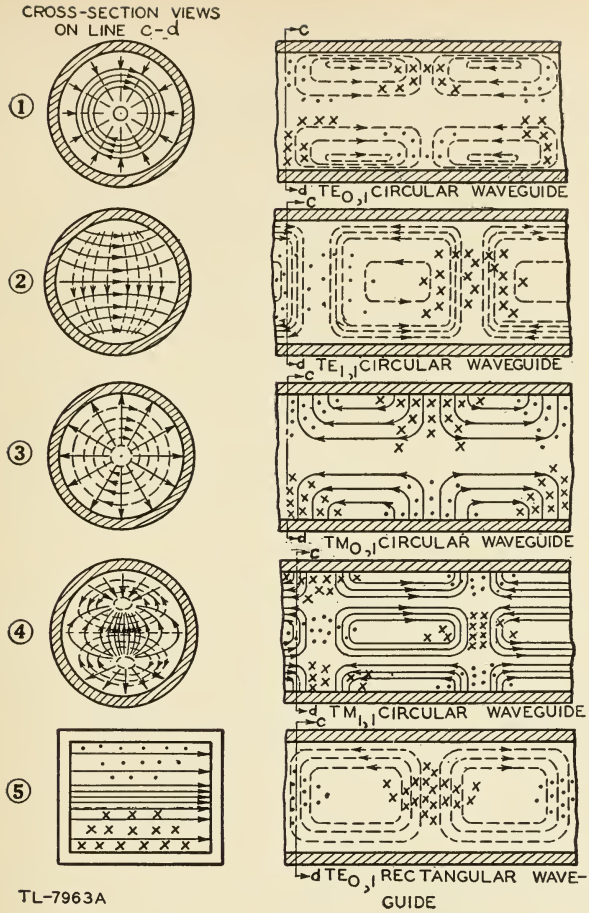

Figure 401. Various modes in waveguides.

It must be emphasized that this is not the result of the energy being transmitted at a speed greater than that of light. Typical wavelengths found in practical waveguides usually run from 1½ to 2 times the wavelength outside of the guide. This fact should be considered when wavelength calculations are made for waveguides.

(5) The two most important modes used for transmission in round waveguides at the present time are probably $TE_{0,1}$ and $TM_{0,1}$. Figure 401 illustrates for circular guides these two as well as two others, $TE_{1,1}$ and $TM_{1,1}$ which are used occasionally. Maxima of E and H lines are shown occurring at the same time, and therefore energy is assumed to be transmitted through the guide. The $TE_{0,1}$ circular mode has the advantage of possessing decreasing attenuation as the frequency is increased; however, the $TE_{1,1}$ circular mode can be used in a smaller tube for the same frequency. The principal mode used in rectangular guides is probably $TE_{0,1}$ as shown in figure 401⑤. This figure is the same as was explained originally throughout the development of the waveguide, except that again energy is assumed to be traveling down the guide with

no reflection and therefore the E and H lines maxima are at the same point.

88. CAVITY RESONATORS. a. Development. (1) The first type of resonant circuit encountered in ordinary radio work usually consists of a coil of wire with a capacitor shunted across its terminals. As the frequency increases either the inductance or the capacitance or both must be reduced, since the resonant frequency is $\frac{1}{2\pi\sqrt{LC}}$. However, a frequency finally is reached at which the inductor L is a single turn of wire and the capacitor C consists of the distributed capacitance across the opposite sides of the same turn. Thus figure 402① illustrates the conventional radio tank circuit and figure 402② shows a quarter-wave line, representing a very small L and C, which is resonant at a high frequency.

(2) The resonant frequency cannot be increased further by the addition of several quarter-wave lines in parallel (fig. 402③), since the connection of lines in parallel decreases the inductance in the same proportion that the capacitance is increased, leaving the resonant frequency unchanged. However, an important benefit is gained by paralleling the

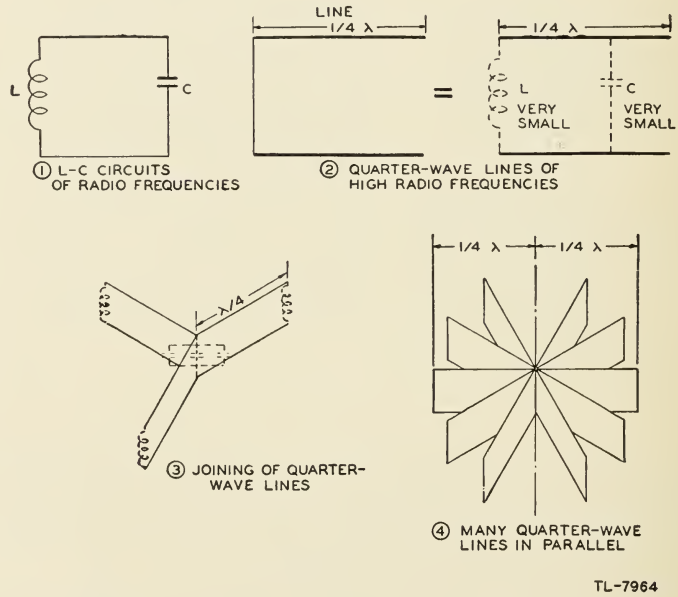

Figure 402. Resonant circuits at high frequencies.

quarter-wave lines. The resistance R of the circuit is decreased; in other words, the Q of the resonant circuit is increased.

(3) Since the resonant frequency is not affected by the number of quarter-wave lines connected together at their open ends (high impedance points), the diagram of figure 402④ can be filled in completely to form a cyiinder with closed ends like a flat can (fig. 403), called a *cavity resonator*. The function of a cavity resonator is similar to that of any coil-and-capacitor resonant circuit. The Q is high and the circuit is

very selective. That is, it is resonant only for an extremely narrow frequency range. Because the size of a resonant cavity is great at broadcast radio frequencies, its use is practical only in the microwave region. For example, at 1 megacycle the cavity would have to be about 100 feet long or wide, but at 1,000 megacycles the size is measured in inches instead of feet.

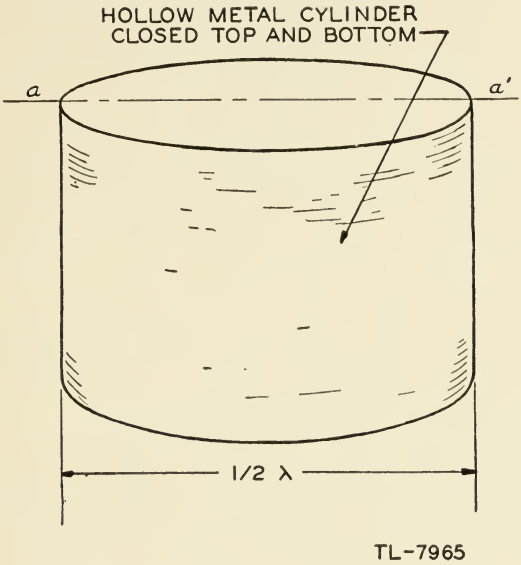

Figure 403. Cavity resonator.

b. Modes of resonance. (1) Since the boundary conditions for waveguides apply equally well to cavity resonators, the fields generated are entirely inside the cavity as they are in waveguides. No E or H lines exist outside the closed cavity. Electron flow is limited to a thin layer of metal on the *inside surface* of the cavity. Figure 404 shows the field pattern for one mode in a cylindrical resonant cavity like that shown in figure 403. The graduated arrows show the direction and intensity of the electron flow on the inside surface at an instant when the field intensity is at a maximum. For the other half of the cycle all arrows are reversed in direction.

(2) There is very little difference between a waveguide and a cavity resonator except in length. In fact the waveguides of figures 389, 392, 393, and 394 can also be classed as a cavity resonator since they are closed at both ends and possess standing waves. If this waveguide is cut to a half-wavelength long instead of 1½ wavelengths, and laid on its side, it shows almost exactly the same field distribution as illustrated in figure 404. Modes in cavities usually are designated by a three-number system, instead of the two-number system used for modes in waveguides. The third subscript number signifies the number of half patterns crossed *perpendicular to the transverse field.* Thus the mode of figure 404 is classed as $TM_{0,1,0}$ for a cylindrical cavity. Similarly, the guide of figures 389, 392, 393, and 394 is classed as a rectangular cavity of mode

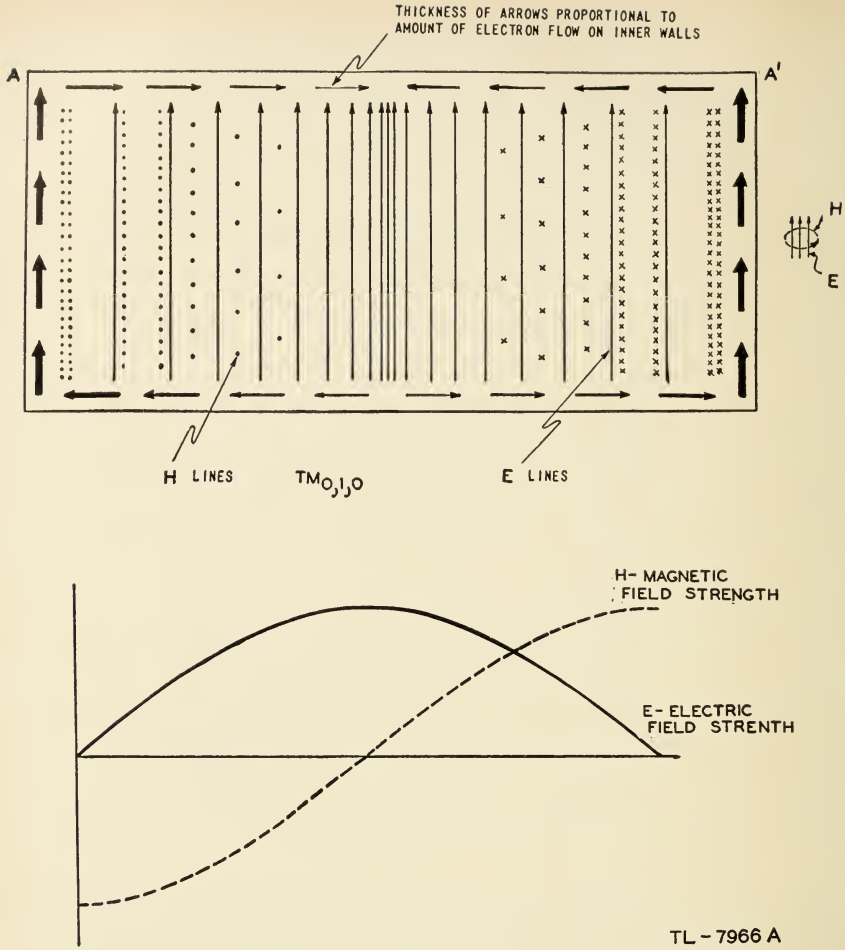

Figure 404. Fields in a cavity resonator.

$TE_{0,1,3}$ when 1½ wavelengths long and $TE_{0,1,1}$ if reduced to a half-wavelength long.

(3) The same cavity can oscillate at several different modes depending upon the manner in which it is energized. Standing waves may be formed by reflections from various surfaces, so that a cavity usually can resonate at several fundamental frequencies as well as harmonics of the fundamentals. Figure 405 illustrates two more possible modes for the cavity of figure 404.

c. Forms. Cavity resonators may have various shapes, including shapes which result from taking sections of waveguides and closing the ends (fig. 406). Since the flow of electrons is confined to an exceedingly thin layer of metal on the inside surface of the cavity, this layer should present as low a resistance as possible so that losses will be negligible. Cavities may be made from thin sheets of copper or from other metals plated with silver, copper, or gold on the inside. In some cases cavities may be constructed from nonconducting materials with the inside sprayed with a

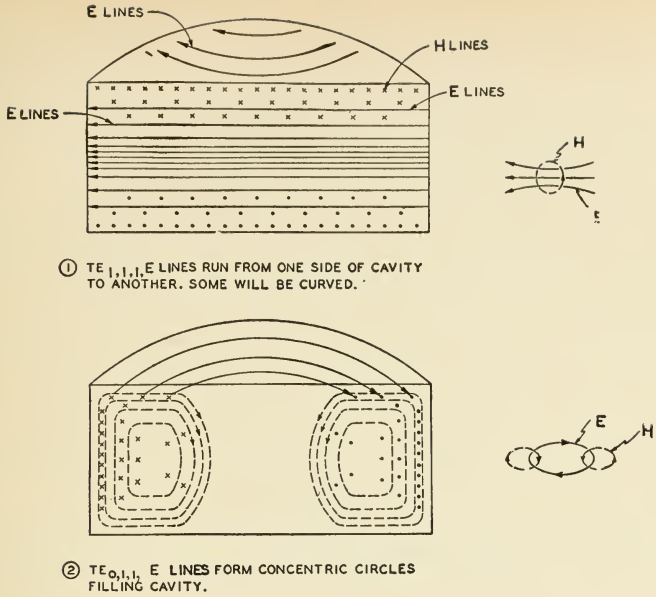

TL-7967A

Figure 405. Modes in a cylindrical cavity.

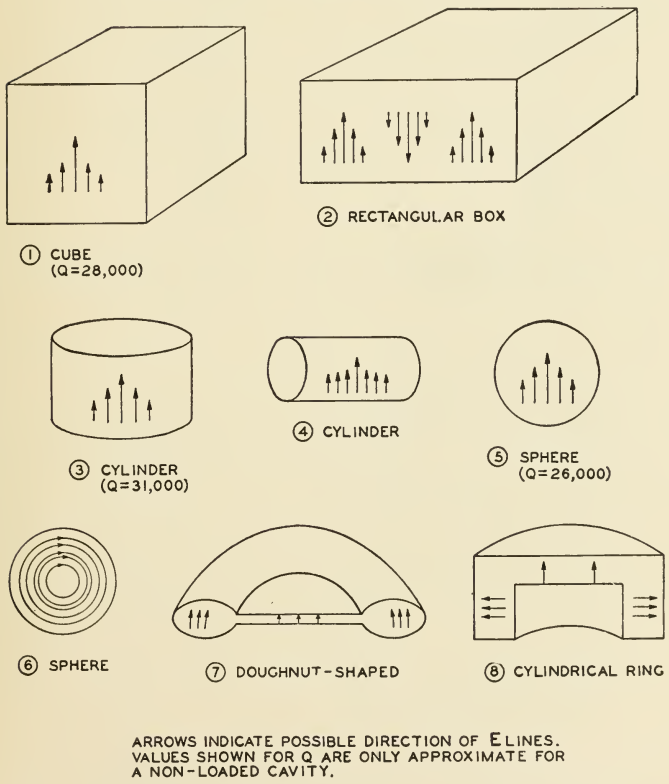

Figure 406. Typical shapes of cavity resonators.

thin layer of metal or covered with metal foil. Cavities for precision measurements of frequency often are made by hollowing out solid blocks of metal so that the dimensions (and hence the resonant frequency) do not change. The extra amount of metal is used for mechanical strength and rigidity only and contributes nothing toward lessening the resistance to the high-frequency electron flow.

89. COUPLING AND MATCHING. a. Energizing waveguides and cavity resonators. (1) There are three principal ways in which energy can be put into and removed from waveguides and cavity resonators. The first is by placing a small loop of wire so that it "cuts" or couples the *H* lines of magnetic field, as in a simple transformer. The second is by providing an "antenna" or probe which can be placed paralled to the *E* lines of electric field. In this case, the probe has an electric field of its own which adds to or detracts from the electric field of the guide or cavity, and thus permits energy to be delivered or removed. The third method is to link or contact the fields inside of the guide or cavity by external fields through the use of slots or holes in the walls.

(2) Figure 407 shows loop coupling (inductive coupling) to the *H* lines. The loop may be placed anywhere on the guide or cavity, as in ①, ②, and ③, as long as it can link the magnetic field. Therefore, it is

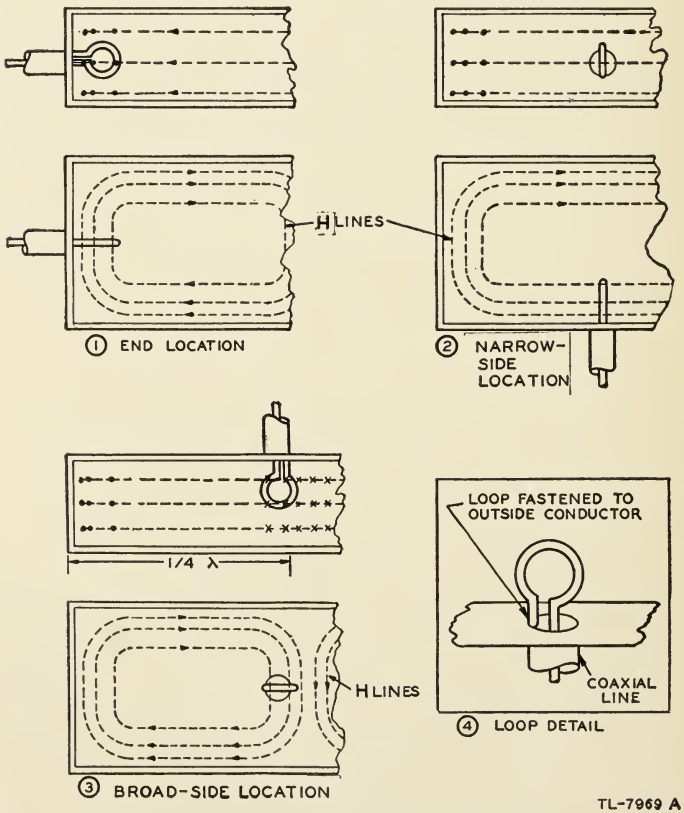

Figure 407. Magnetic coupling from coaxial line to waveguide.

usually placed at a location where the H lines are at a maximum. If less coupling is desired, the loop can be rotated so that a smaller number of lines can go through it, or it can be shielded, or it can be moved to a position in the guide where there are fewer lines. If the loop is rotated 90° from its position in figure 407, no lines pass through it and practically no coupling is available. In the case of waveguides transmitting energy, the loop is placed for maximum coupling where it would be cut by the most H lines.

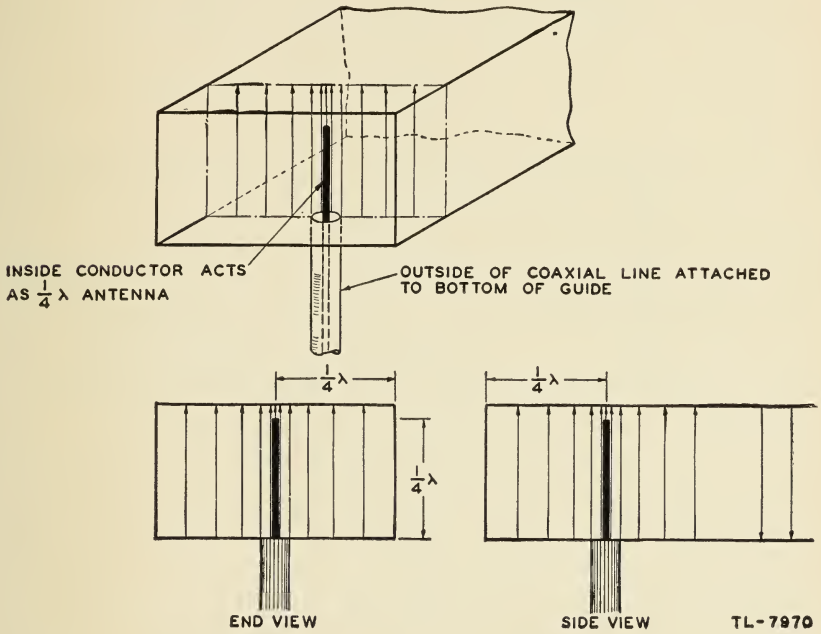

Figure 408. Electric coupling from coaxial line to waveguide.

(3) Figure 408 shows maximum coupling by means of E lines (electric coupling). Less coupling can be obtained if the robe is moved away from the position of maximum E lines or if less of its length is exposed to the fields in the guide. Figure 409 shows a typical application in which the position of the field with respect to the probe can be varied by moving plunger A in the end of the waveguide. Plunger B at the top of the coaxial-line extension performs two functions. It acts as a shorting plate to form a quarter-wave insulating support for the center conductor, and also provides a means for tuning the coaxial section so that the electric field of the coaxial line is at the proper position along the center conductor to energize the waveguide.

(4) Figure 410 illustrates possibilites of coupling to waveguides and cavities through slots or openings. This method is sometimes used when only a small amount of coupling is desired. Variations of this method may be used in which the coupling is obtained by directing a beam of radio waves (an electromagnetic field) toward a hole in the wall of the guide or cavity or by shooting a stream of electrons through a hole in

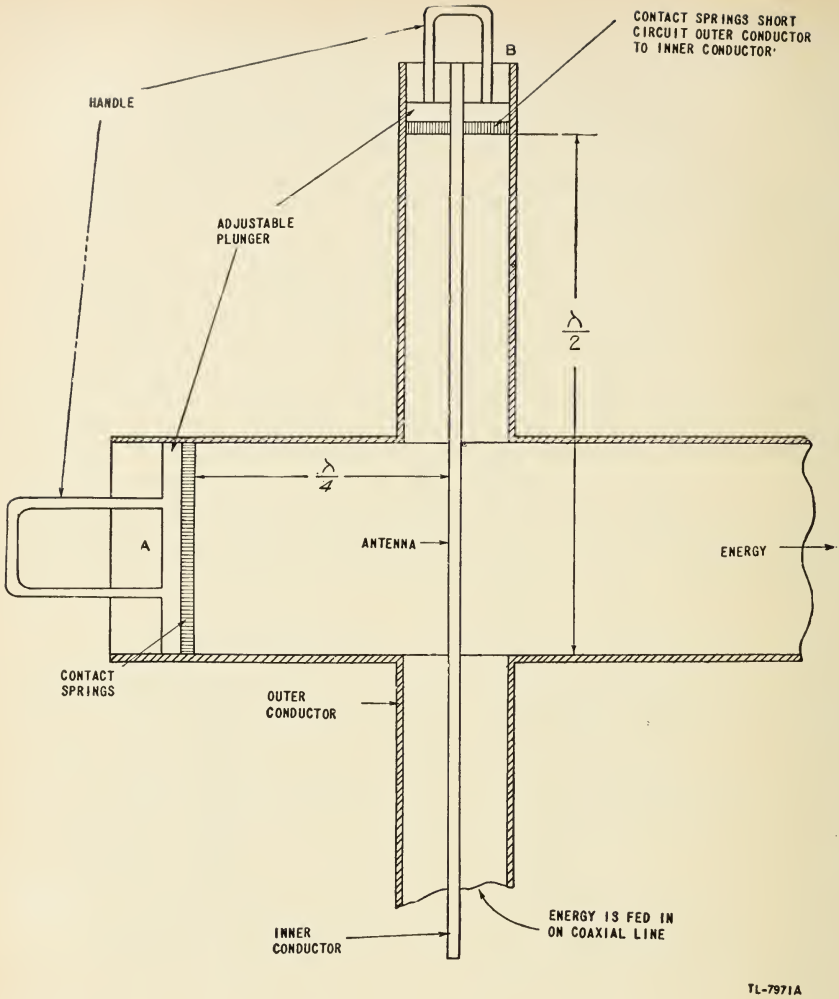

Figure 409. Practical application of electric coupling from coaxial line to waveguide.

one wall and out a hole on the opposite wall. The klystron (ultra-high-frequency tube) operates on the latter principle in delivering energy to its cavity. The movement of electrons creates moving fields which set up or link the fields of the cavity.

(5) Energy may be either put into or removed from waveguides and cavities by the same means. In the case of waveguides which are transmitting energy, the output end may be left open. Some energy is radiated into space, while the remainder of the energy is reflected, causing standing waves to be set up within the guide. In order to eliminate the reflections and to terminate the guide properly for maximum power transfer, the opening may be flared in the shape of a horn. This flaring, in effect, matches the impedance of the guide to the impedance of free space. Any

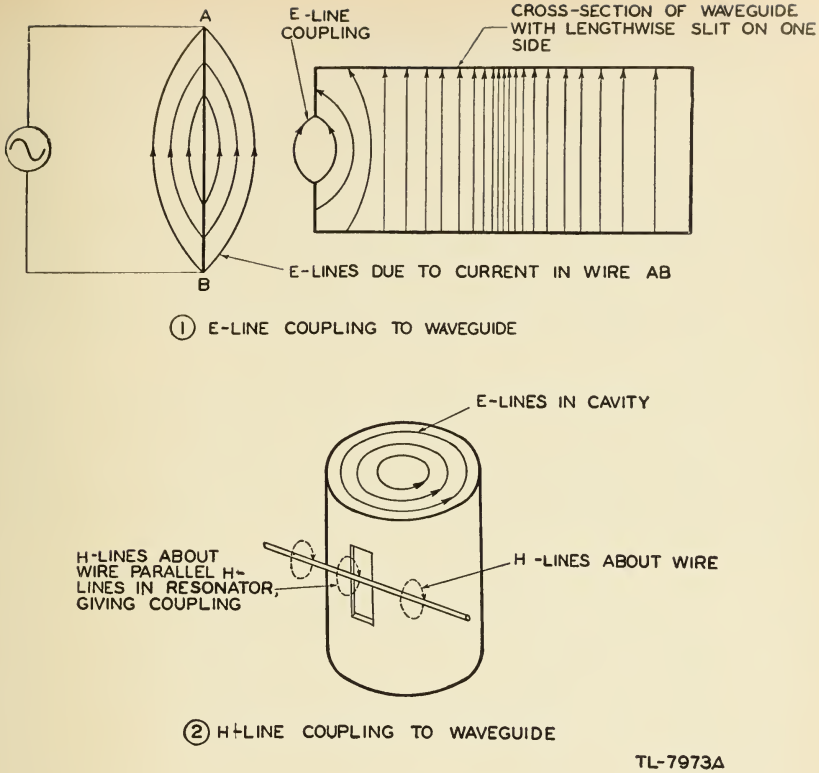

Figure 410. Coupling through slots.

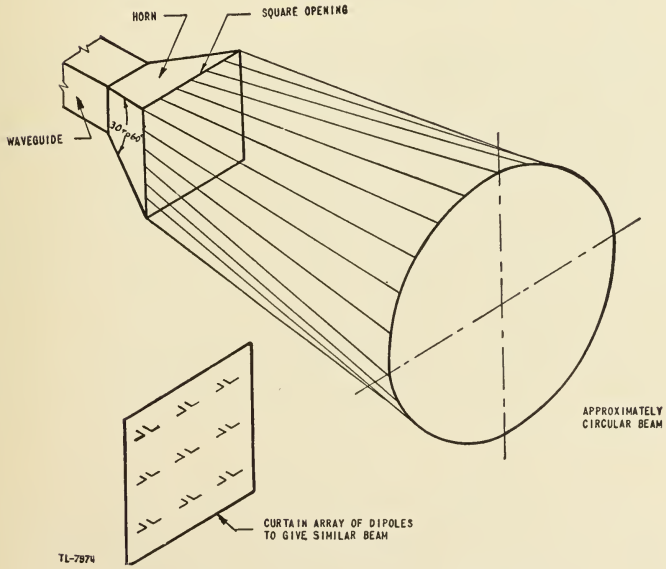

Figure 411. Radiation from a waveguide.

other method of terminating a waveguide in its characteristic impedance also causes energy to be absorbed without reflection.

b. Impedance characteristics and matching. (1) The characteristic impedance of a waveguide can be thought to be the voltage-to-current ratio of waves traveling in one direction. The lowest characteristic impedance obtainable in a circular guide is about 350 ohms, but it may vary in a rectangular guide from 0 to 465 ohms depending on the dimensions and modes. When a waveguide of a certain characteristic impedance is matched to space by the use of a horn (fig. 411), the effect is the same as an array of dipole antennas, and a beam of energy is radiated into space. For a specified gain or width of beam the area of the horn opening can be determined by means of certain design formulas. For a certain opening there is also a certain length of horn which will give the best results.

(2) Any abrupt change in the size or shape of a waveguide causes reflections. Therefore, in order to pass energy efficiently from a guide having one characteristic impedance to one having having another characteristic impedance, some form of matching section must be provided. For this purpose, the horn can be used to permit the fields to expand or contract smoothly to fit the different size of guide (fig. 412).

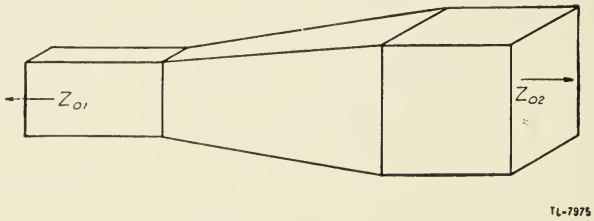

Figure 412. Impedance-matching section for waveguide.

(3) Another method of joining two dissimilar waveguides is to use a cavity resonator as a transformer. Figure 413① shows a resonant circuit acting as a matching device. For higher frequencies the half-wave frame at ② achieves the same result. At extremely high frequencies the matching device can consist of the resonant cavity as at ③, which has primary and secondary openings. The primary opening presents the correct impedance Z_{01} to the smaller waveguide and the secondary opening presents Z_{02} to the larger guide. Of course the cavity must be proportioned to be resonant in the proper mode, so that the electromagnetic field configuration is similar to that of the waveguide.

(4) Other problems encountered in connecting two waveguides may include turning corners or rotating the fields so that they are in the proper direction for matching. Examples of connecting sections for turning corners are shown in figure 414, while a section for rotating the field pattern a quarter turn is shown in figure 415.

(5) When two sections of waveguide must be connected to allow for the effects of expansion, a choke joint (fig. 416①) is used. The choke flange has cut in it a circular slot a quarter-wave deep. The flange is so designed that the middle of the broad face of the waveguide is a quarter-wavelength from the edge of the slot, point M in figure 416③.

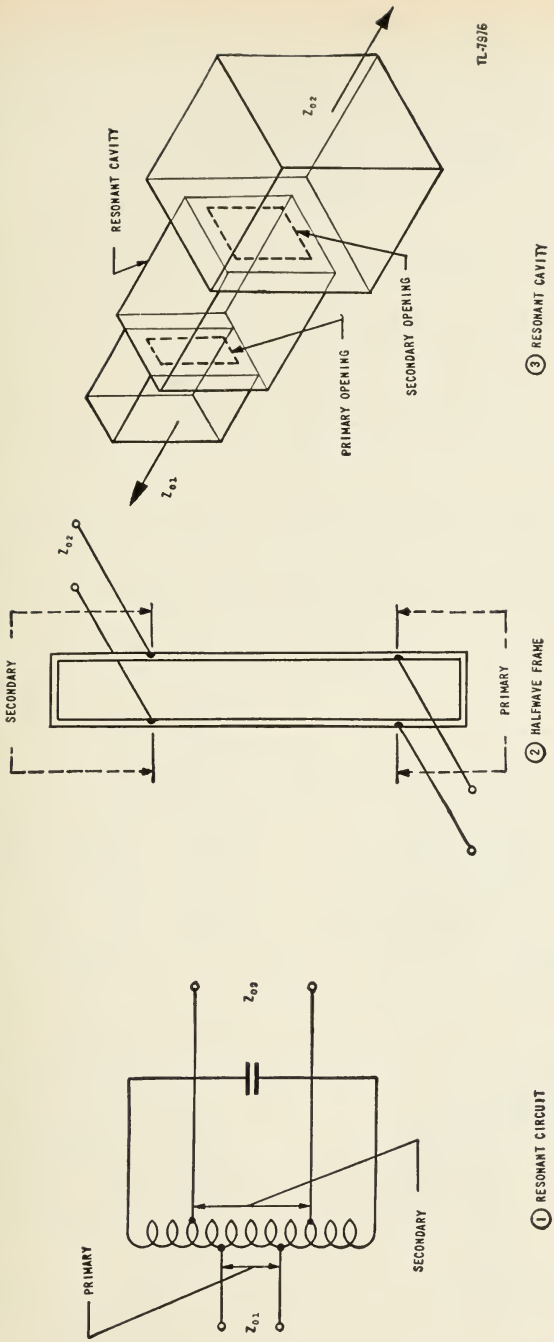

Figure 413. Comparison of resonant cavity with other impedance-matching devices.

When energy attempts to leak out of the waveguide at the joint, standing waves are set up in these quarter-wave sections. The short circuit at *A* reflects to *B* as a high impedance. This high impedance is transformed

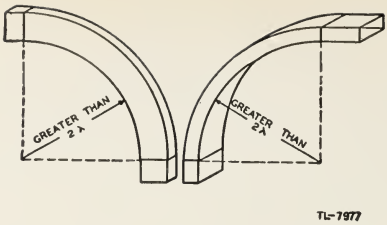

Figure 414. Waveguide elbows.

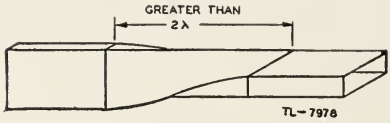

Figure 415. Waveguide section for rotation of fields.

to a low impedance across the quarter-wave section from B to C. Thus the choke joint effectively short-circuits the points D and E in spite of the fact that there is no metallic connection between them. The choke joint is relatively ineffective at points such as P and Q in figure 416③,

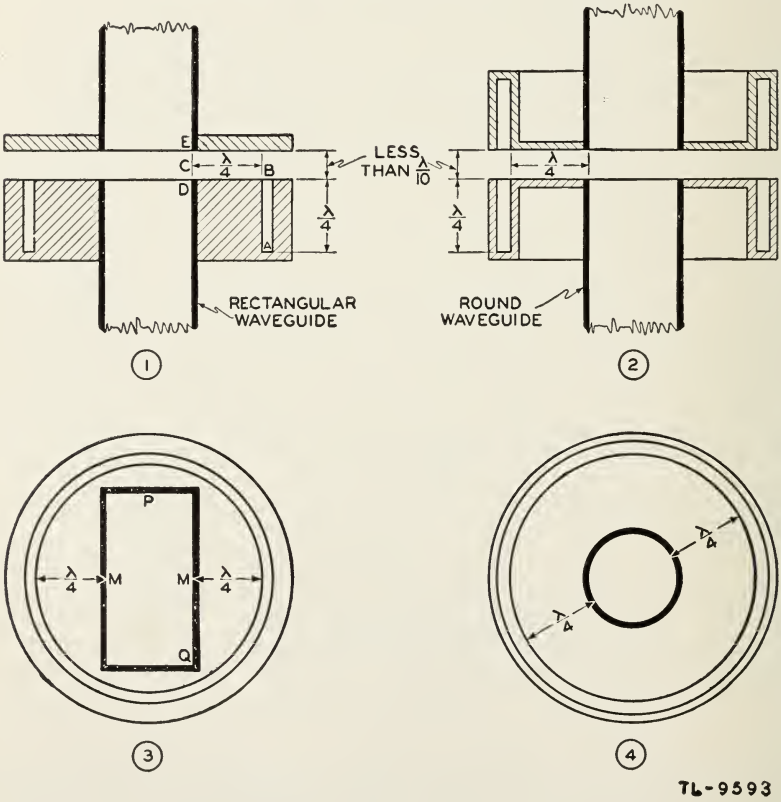

Figure 416. Choke joint for waveguide.

since a high impedance is reflected across the ends of the two waveguides at these points. Since the r–f voltage is very low at these points, there is little tendency for energy to leak out of the joint, and the choke joint for a rectangular guide is fully effective only at the point where the r–f voltage is a maximum. However, the choke joint is very effective for a round waveguide since the distance from the waveguide to the edge of the slot can be made a quarter-wavelength all around the guide (fig. 416③ and ④). This same arrangement can be used with round waveguides to allow one guide to turn relative to the other, as well as to permit the two pieces of guide to slip axially as they expand or contract.

(6) Impedance characteristics of waveguides may also be changed by the use of metal partitions. When the edges of the partitions are parallel to the *E* lines as in figure 417①, currents flow vertically in the partitions and create a local magnetic field. The partitions therefore behave like a shunt inductor in the guide. If the partitions are turned crosswise as in ②, electrons accumulate first on one half and then on the other. Here the local field is largely electric and the partitions behave like a shunt capacitor. A combination of the two types as in ③ behaves as either a capacitor or an inductor, depending upon the dimensions. If the inductance is sufficient to resonate with the capacitance, the partition may act as a high *shunt* resistance. In such case, the wave passes the partition as though it were not there. The effect of partitions on modes having reversals in directions of lines from one side of the guide to the other is much more complicated. Such partitions may act as filters, rejecting all but certain bands of frequencies. A lengthwise partition as in ④,

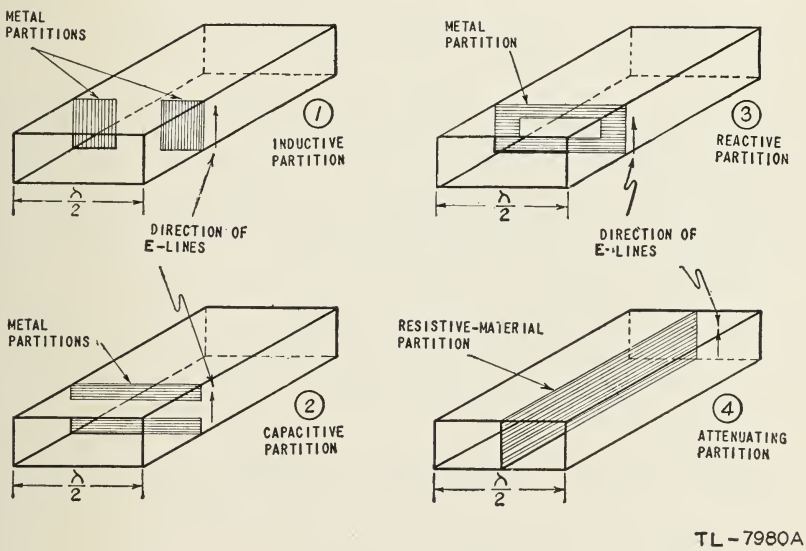

Figure 417. Partitions in waveguides.

made of a resistive material such as graphited fiber, may be used in the guide as an attenuating device. This partition is dropped into the guide through a slot so that it cuts the maxima of the electric field. The farther the partition extends into the guide, the more attention is obtained

because the electric field intensity is decreased by the conduction that takes place in the resistive material.

(7) In addition to a radiating horn, flared section and resonant-cavity transformer, certain other means can be used to terminate a waveguide in its characteristic impedance in order to absorb the transmitted energy. Four methods that are in use are shown in figure 418. In ①, the energy is absorbed by a flat plate of resistive material crosswise in the guide. In ②, the energy is dissipated by a small rod of resistive material from top to bottom across the guide at high-voltage points. In ③, the energy

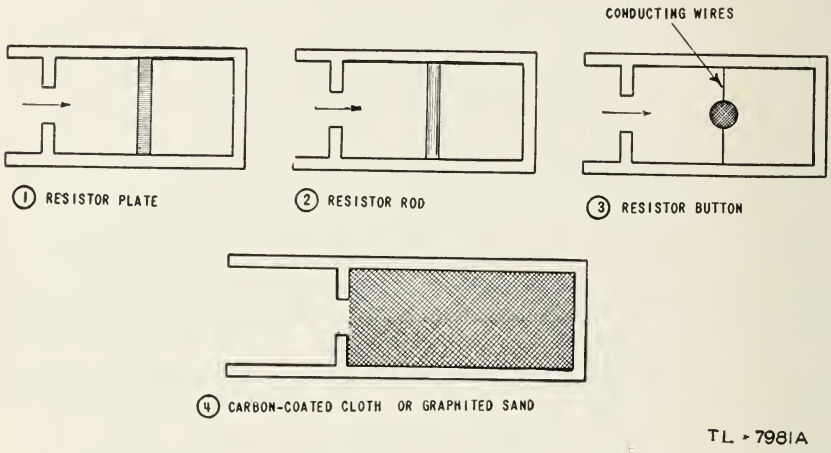

Figure 418. Possible methods of terminating a waveguide in its characteristic impedance.

is dissipated by a small particle of resistive material suspended by wires across the high-voltage points. In ④, the energy is dissipated by a mass of carbon-coated cloth or graphited sand. The small partitions tend to set up standing waves and place the resistive material at a high-voltage point. In general, the resistive materials act as resistance loads to dissipate energy. If the material has a low impedance at the frequency range of the guide and there are standing waves on the guide, the resistive material should be placed for proper matching at a place where the ratio of E lines to H lines is low. But if the material has a high impedance it should be placed where the E lines are at or near a maximum. This condition is similar to picking the proper E/I ratio on a two-wire resonance line for matching purposes (fig. 413②).

90. APPLICATIONS OF WAVEGUIDES AND CAVITY RESONATORS.

a. General. Waveguides are used in three basic applications: as a means of energy transmission, as a means of energy radiation, and as a means of obtaining resonant conditions.

b. Energy transmission. Energy transmission is most important at frequencies for which the waveguide is reasonably small and has less losses than other forms of transmission line. For frequencies in the super-high-frequency range (3,000 to 30,000 megacycles per second) the waveguide may become the principal means of transmission, since the dimensions are a few inches or less.

c. Energy radiation. (1) A waveguide left open on the end radiates a certain amount of energy into space, but the termination seldom is proper to prevent standing waves, and therefore low efficiency as an antenna results. The use of the horn reduces the reflections and enables maximum energy to be radiated. The radiation pattern from a horn (fig. 411) is shaped like the beam from an antenna array having the same frontal area, measured in wavelengths.

(2) Some radiation also takes place from holes or slits in waveguides. Very little radiation takes place, however, if the hole or slit is covered by wire screen.

d. Resonant cavities. (1) Sections of waveguides closed at both ends, or partitioned in such a way that reflections occur, contain standing waves and therefore act as resonant cavities. Such cavities can be used for matching waveguides of different characteristic impedances as in fig. 413③; for creating variable impedance points for matching to load impedance as in figure 418; as tuned tank circuits for ultra-high-frequency oscillators; as wavelength-measurement devices or as matching and filtering section.

(2) A waveguide section used as a resonator for wavelength measurement is shown in figure 419①. Energy is allowed to enter the small opening in the end plate from a source of radiated fields. If the plunger

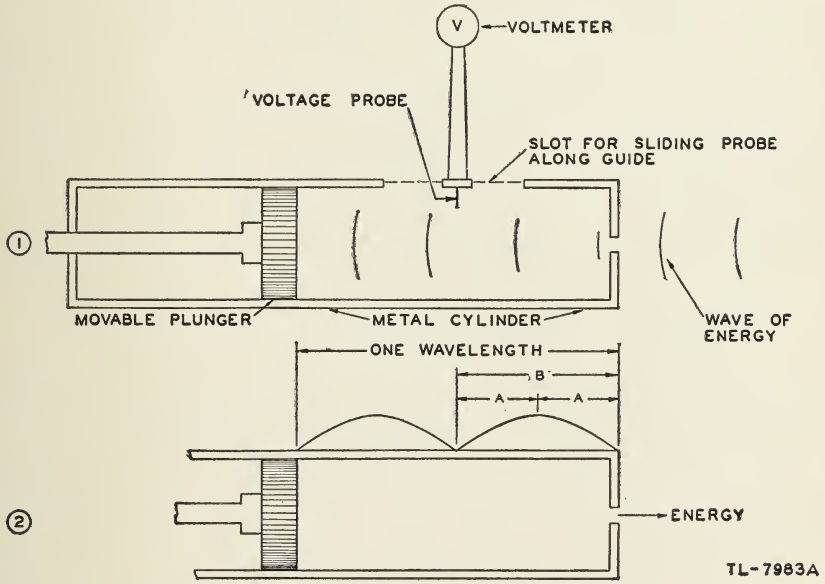

Figure 419. Cavity resonator for wavelength measurement.

is not at the proper position for the frequency of the entering waves, the cavity does not resonate and hence there is no reading on the r–f voltmeter. If the plunger is moved back and forth, a point may be found where resonance takes place and the energy wave reflected from the piston aids the incoming wave rather than cancels it. A standing wave of electric

field then is set up and may be detected by the r–f meter. If the resonating section is long enough that a voltage maximum and minimum may be found by moving the r–f probe in its lengthwise slot, the wavelength may be determined. Thus, in figure 419②, if distance A or B is determined, the wavelength in the guide is $2B$ or $4A$. *The value is always greater than the wavelength in air for the same frequency.*

(3) Other methods besides the movable plunger method can be used to tune the cavity to resonance. One method is to introduce a variable capacitance at the point of highest voltage as in figure 420① and ② in which the mode is assumed to be such that maximum voltage is along HG. Another method is to introduce a metal slug into the cavity as in figure 420④ and ⑤. If the metal mass is at the position of maximum E lines, these lines are shortened, the capacitance is increased, and therefore the resonant frequency is lowered. If the metal mass is at the posi-

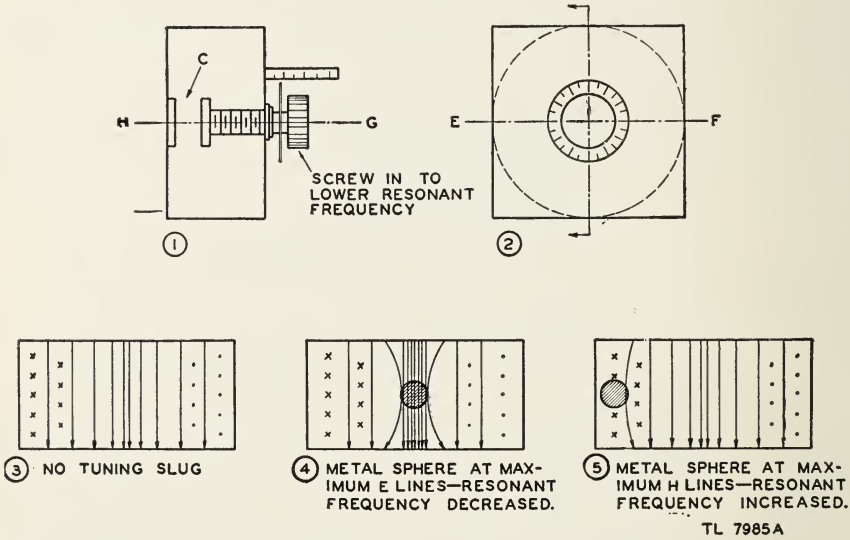

Figure 420. Alternative methods of tuning resonant cavities.

tion of maximum H lines, these lines are shortened, the inductance is decreased, and therefore the resonant frequency is raised.

(4) Resonant sections of waveguides may be used as impedance-transfer and inverting devices in a similar manner to resonant two-wire lines; for example, odd multiples of shorted quarter-wave sections of waveguides act as *open circuits* where they join other waveguides, and multiples of shorted half-wave sections of waveguides act as solid walls where they join other waveguides. Figure 421① shows a quarter-wave shorted section attached to a transmitting waveguide. The transmission line from which the waveguide may be considered to have been developed is shown as a heavy dotted line. Thus, the action may be likened to a quarter-wave shorted stub of a two-wire line which presents high impedance between its terminals. In the equivalent two-wire line circuit of the waveguide (fig. 421②) there is a high impedance between L and K. Therefore, in figure 421③, the guide acts as if it had an open circuit in one side for frequencies which make the stub a resonant section. For

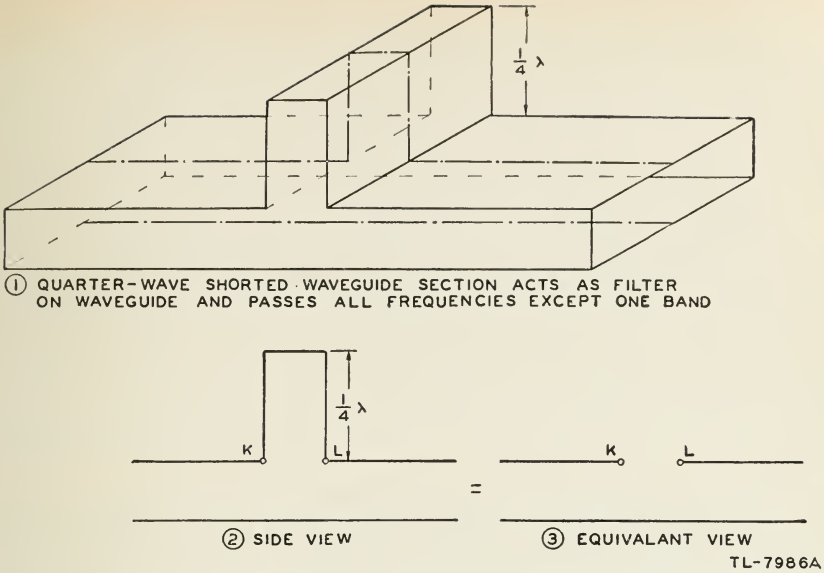

Figure 421. Action of quarter-wave shorted section of waveguide.

these frequencies the waveguide may look like a high impedance, since the field distortion at the opening tends to prevent the passage of such frequencies.

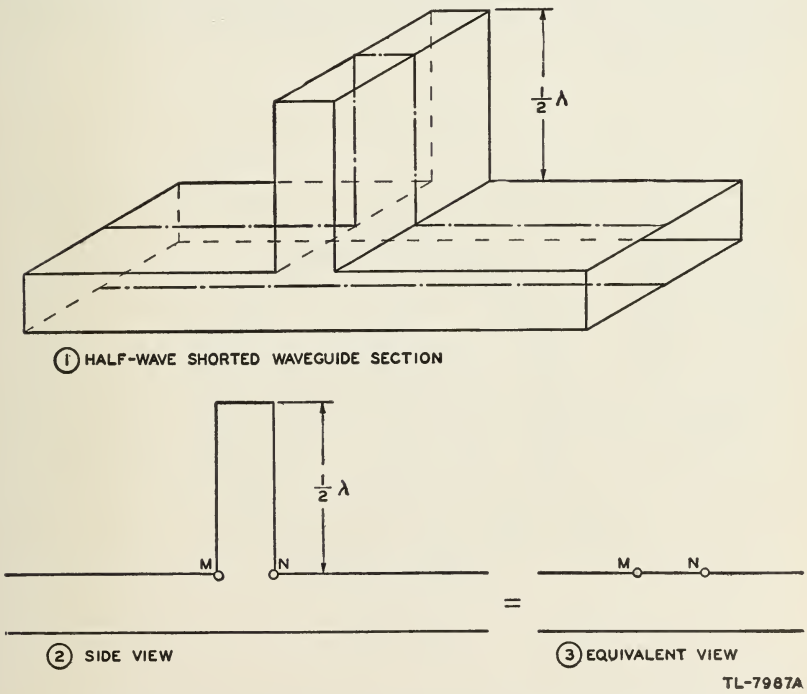

Figure 422. Action of half-wave shorted section of waveguide.

(5) Figure 422① shows a half-wave section of waveguide attached to a transmitting waveguide. Again the situation is similar to a half-wave shorted stub of a two-wire line which acts as a short across its terminals. Therefore the guide sees a short across *MN* in figure 422②, or sees in effect a closed wall in figure 422③. Thus a half-wave shorted section transmits the impedance of the shorting-end plate without change, while the quarter-wave shorted section inverts the plate to an open circuit.

e. Dielectric waveguides. (1) Although the previous discussion was confined to hollow waveguides made with conducting metal walls, electromagnetic waves can be confined to solid rods made of insulating material. The effect is similar to that of ordinary light which can be guided around corners by means of transparent plastic (lucite) rods, as used in doctors' and dentists' inspection lamps. The light rays travel inside the rod and are reflected back inside when they strike the surface of the rod at an oblique angle. In order to leave the material with appreciable strength, the rays must strike a perpendicular wall as they do when they arrive at the end of the rod.

(2) Since electromagnetic *E* and *H* waves travel out in space, which is a dielectric material, in order to radiate energy, they can also travel through a solid dielectric material. However, if the dielectric material has the proper cross-section and size with respect to a wavelength, the electromagnetic waves are reflected at the surface where the air and dielectric meet, so that most of the field is confined within the insulating material. Dielectric waveguides lose much more energy to the surrounding space than do hollow metal guides, and therefore the waves diminish much more rapidly, or are *attenuated*. However, dielectric guides are useful in matching metal waveguides and in cases where conducting material cannot be used.

SECTION XII

ULTRA-HIGH-FREQUENCY GENERATORS

---

91. FREQUENCY LIMIT OF NEGATIVE-GRID OSCILLATORS. a. General. (1) A negative-grid oscillator is an oscillator in which the average voltage of the grid is negative with respect to the cathode. Although the ordinary triode oscillators reviewed in section VI were negative-grid oscillators, this new designation is necessary in the discussion of high-frequency oscillators because positive-grid oscillators are sometimes used.

(2) A conventional generator of high-frequency oscillations consists of a vacuum tube and an external oscillating circuit composed of an inductor, L, and a capacitor, C, connected between the plate and the grid of the tube (fig. 423). The generated frequency can be computed from

$$f = \frac{1}{2\pi\sqrt{LC}}$$

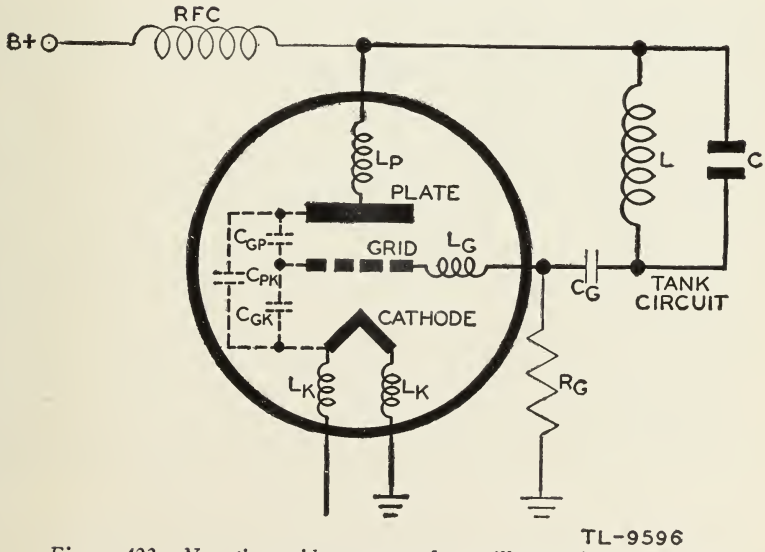

Figure 423. Negative-grid vacuum-tube oscillator with emphasized interelectrode capacitances and lead inductances.

where L is measured in henrys and C in farads. To increase the frequency, either L or C or both must be reduced. It has been found that the maximum power output from any tube is independent of frequency until a certain frequency level is reached, beyond which the output falls off very rapidly. Three main factors limit the output and efficiency of a triode oscillator as the frequency is increased:

(*a*) Inductances and capacitances associated with tube electrodes.

(*b*) Increased radio-frequency loss.

(*c*) Electron transit time.

b. Limitations of physical structure of tube. (1) At ultra-high frequencies, the vacuum tube (fig. 423) must be viewed as an a-c circuit element consisting of capacitances C_{GP}, C_{GK}, and C_{PK} and inductances L_P, L_G, and L_K which are inherent in the structure of the tube. The combined effect of these capacitances on the generated frequency is equivalent to an increase of the tank capacitance, C, by the amount

$$C_t = C_{GP} + \frac{C_{PK}\ C_{GK}}{C_{PK} + C_{GK}}$$

At lower frequencies, when C is relatively large, this effect is negligible. However as the frequency is raised, the interelectrode capacitances become a proportionately greater part of the capacitance of the tuned circuit.

(2) Since the lead inductances effectively combine in parallel with the tank-circuit inductance, L, their effect on the circuit is to raise the frequency limit. However, the inductance, which are negligible at low frequencies, may become troublesome in the ultra-high-frequency region. For example, a wire 0.040 inch in diameter and 4 inches long has an inductance of approximately 0.1 microhenry. At an ordinary broadcast frequency of 1 megacycle per second, this inductance represents an impedance of

$$0.1 \times 10^6 \times 2\pi \times 10^6 = 0.63 \text{ ohm}$$

at 100 megacycles per second it becomes 63 ohms, which will exercise considerable choking effect. In addition, the inductance of the cathode lead is common to the grid and plate circuits, so that it provides degenerative feedback which reduces the amplitude of the oscillation.

(3) In order to increase the frequency of an oscillator, the value of the components of the tank circuit must be decreased. Generally, decrease in the value of the elements requires that the physical size be reduced also. This decrease is indicated schematically in figure 424① and ②. In the extreme case, the external capacitance of the tank circuit is zero and the tank circuit inductance shrinks to a straight conductor, short-circuiting the plate and grid terminals. The corresponding frequency is called the *resonant frequency* of the tube, which is the upper frequency limit of the tube. Figure 424③ shows this condition. Capacitor C_G has negligible reactance at the frequency of oscillation, so that the inductance L_G of the grid lead is in series with the inductance L_P of the plate lead. Thus the resonant circuit of the tube, shown by the solid lines, is determined by the inductance of the plate and grid leads in parallel with a combination of the internal capacitances of the tube. The oscillator circuit is effectively an ultraudion circuit (par. 42c(3)).

(4) Low interelectrode capacitance can be attained either by reducing the electrode size or by spreading the electrodes farther apart. However, unless abnormally high voltages can be used, spreading the electrodes will

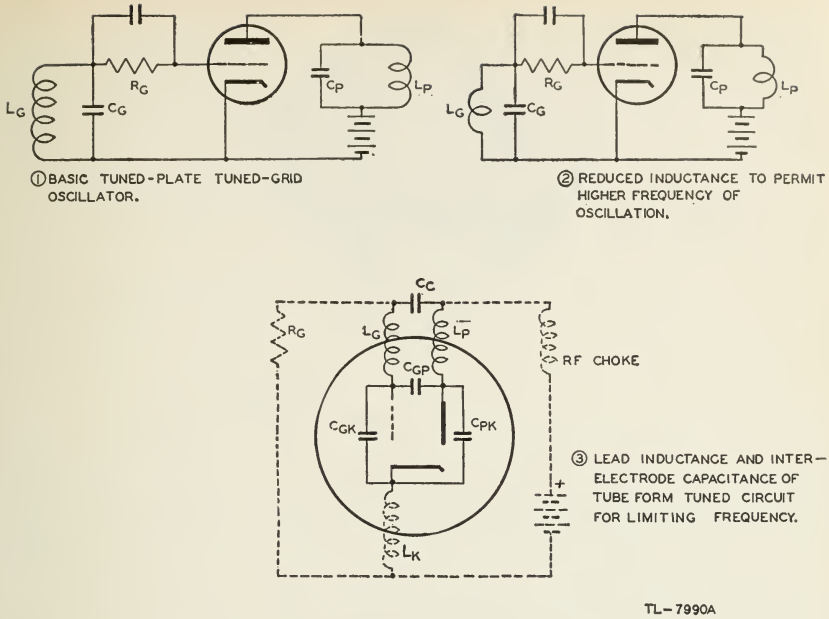

Figure 424. Increasing the frequency of an oscillator.

have the undesired effect of increasing the electron transit time. If all the linear dimensions of a vacuum tube are reduced by a factor n, the tube constants and plate current at fixed operating voltages *remain unchanged,* but the interelectrode capacitance, lead inductance, and transit time are *reduced* by the factor n. However, reduction of the physical size of the tube reduces its power-handling ability, since only small areas are present for dissipating heat. The reduction of the plate dissipation is proportional to the factor $1/n^2$. Therefore, forced air or water-cooled ultra-high-frequency tubes must be used if high average power output is to be obtained.

(5) In addition to the reduction that results from decreasing the physical size of the tube, the lead inductances may be further decreased by making the leads of large diameter rods and of the shortest length that will provide a safe insulating distance between the anode and other tube terminals. Thus, the leads in most ultra-high-frequency tubes are brought out straight through the tube envelope, and no conventional tube base is used.

(6) The short transit time, small lead inductance and capacitance, and small interelectrode capacitance necessary for the production of ultra-high-frequency oscillations have been attained in the acorn and doorknob types of tubes. Acorn triodes (fig. 72) will oscillate at wavelengths as low as 40 centimeters (750 megacycles per second), but they are designed primarily for use in amplifier and low-power oscillator circuits.

(7) Figure 425 shows a Western Electric type 316A doorknob tube, so named because the envelope resembles a doorknob in shape. This tube has an upper frequency limit of about 700 megacycles per second when

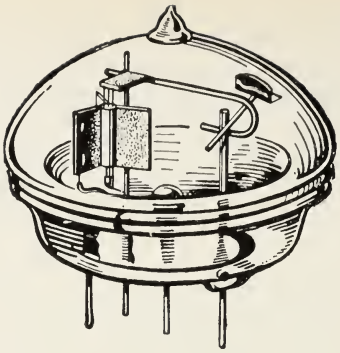

TL-7988

Figure 425. Western Electric type 316A doorknob tube.

used as an oscillator. Note that the leads are brought out directly through the glass envelope, and are widely separated to reduce the capacitance between them. The tube elements are unusually small and closely spaced to provide both short electron transit time and small interelectrode capacitance. The grid, supported by cooling collars at each end, is composed of a number of straight wires which are parallel and equidistant from the axial filament. The rated plate dissipation for this tube, shown approximately two-third size in figure 425, is 30 watts.

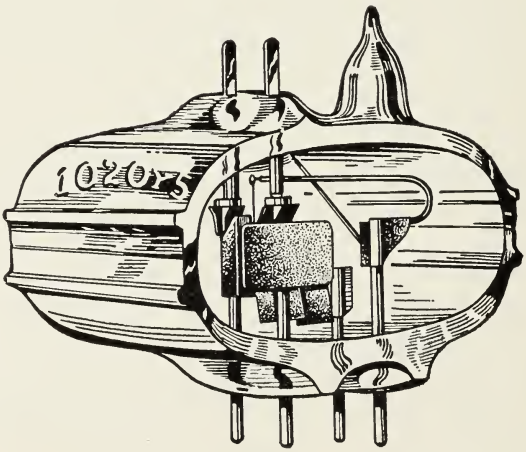

TL-7989

Figure 426. Western Electric type 368A tube.

(8) Figure 426 shows a Western Electric type 368A tube which has an upper frequency limit of approximately 1,700 megacycles per second. Its grid and plate elements are supported by wires that go straight through the tube envelope, and thus provide two independent paths to each of these elements. The filament has only one set of leads. The grid, which consists of a series of tungsten wire loops supported by a cooling fin, projects into a semicircular groove in the block of graphite

which acts as the plate element. The limiting factor in the power-handling ability of this tube is the temperature of the grid, which is unusually close to the filament and may omit electrons if it becomes too hot. The double-ended construction of this tube permits reduction of the effect of the lead inductance and interelectrode capacitance by making possible a circuit in which the tube elements are at the center of a half-wave tuned line system with shorted ends.

c. Limitations of radio-frequency losses. (1) As the frequency of an oscillator is raised, the radio-frequency circuit losses increase because of,—

(*a*) The increasing skin effect.

(*b*) Greater capacitance-charging currents.

(*c*) Eddy current loss in the adjacent conductors.

(*d*) Dielectric loss in the glass parts of the tube.

(*e*) Energy loss by direct radiation from the circuit.

All of these losses cause the loading on the tuned circuit to be increased, so that the Q of the tank circuit is decreased, resulting in poor efficiency of the tube itself. In addition, the losses increase at the expense of the permissible useful load, causing poor circuit efficiency and less useful output.

(2) Skin effect forces the current to flow in a thin layer on the surface of the conductor. The depth of this layer is given, for copper, by

$$d = \frac{2.63 \times 10^{-3}}{\sqrt{f}}$$

where d is the depth of penetration of the current in inches and f is the frequency in megacycles per second. Thus, the higher the frequency, the thinner will be the layer in which the current flows. The I^2R losses that take place in a given conductor must increase, then, as the frequency increases, since the area in which current can flow is less, making the resistance greater. Skin effect is reduced by using conductors of large diameter so that the current can flow through a reasonably large cross-sectional area even though the depth of penetration is small. Thus, using large leads for ultra-high-frequency tubes reduces not only the lead inductance but also the lead resistance. As a means of further reducing skin effect, conductors are often plated with a low-resistivity metal such as silver. In cases where corrosion could convert the surface of the conductor to a high resistivity oxide, the conductor is plated with gold which does not corrode and which has excellent conductivity.

(3) Because the reactance of interelectrode capacitance and distributed capacitance becomes small for ultra-high-frequencies, the magnitude of the charging current for these capacitances becomes large. A current of 60 amperes is not an unusual value for large tubes. Such currents contribute nothing to the power output, but in flowing through the resistance of the circuit they do produce losses. Because of skin effect, these currents follow the surface of the metal electrodes. In some cases this may cause excessive localized heating at the junctions of the electrodes and the glass envelope, which may result in cracked seals and failure of the tube. Thus, in ultra-high-frequency oscillators the tuned circuit is designed to have the maximum possible inductance. As a result, the minimum amount of capacitance is needed in addition to the interelectrode capacitance to resonate with the inductance. The charging

current is reduced by the use of special tubes in which the capacitances are made very low. In addition, a push-pull connection (fig. 427) is used to reduce the effective capacitance. Since the interelectrode capacitances

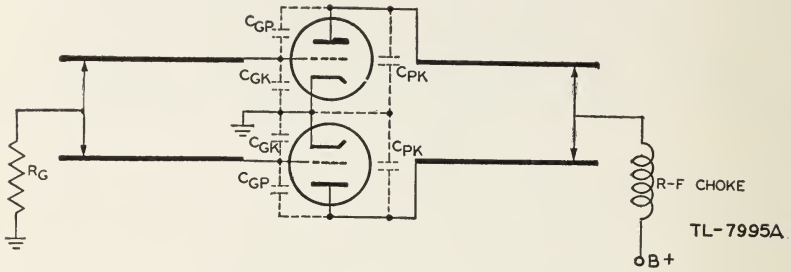

Figure 427. Parallel-rod transmission-line oscillator.

are in series in this type of oscillator, the effective capacitance shunting the resonant circuit is half that for a single tube, and the charging current for this capacitance is correspondingly reduced.

(4) Losses resulting from radiation and eddy currents in adjacent conductors are caused by the incomplete cancelation of the electromagnetic field surrounding the circuit. If two parallel conductors are spaced closely, on the order of 1/100 of a wavelength, the field around one conductor neutralizes almost completely the field around the other. Thus, close spacing reduces radiation and eddy current losses. However, decrease of conductor spacing below a certain value increases the r–f resistance of the conductors, and imposes a serious limitation on the maximum r–f voltage that can exist with out break-down. The use of coaxial line instead of open-wire line almost completely eliminates both radiation and eddy current losses because the outer conductor acts as a shield which prevents the electromagnetic fields from expanding into space.

(5) Dielectric losses in the tube envelope are objectionable not only because of the reduction of ouput and efficiency, but also because they may cause disintegration of the tube seals. Dielectric losses are reduced by eliminating the tube base and making connections directly to the loads, and by bringing the conductors through the glass at points on the conductors where the r–f voltage is minimum.

(6) In oscillators for ultra-high-frequency use, not only must the tube losses be kept very low, but the losses in the associated circuits must also be kept as low as possible. In other words, the circuits when not loaded must be of the highest possible Q. For this reason, the tuned circuits associated with ultra-high-frequency oscillators are usually resonant sections of transmission line rather than coil and capacitor combinations. The Q of a quarter-wave short-circuited section of line (par. 83i) can be made much higher than that of a conventional tank circuit because it is feasible to make a tuned line of conductors of larger diameter than is possible with the conventional inductor, making the skin effect less. In addition to their low losses, tuned transmission lines are used as circuit elements in ultra-high-frequency oscillators because the tube leads may act as extensions of the transmission line. Thus the interelectrode capacitances and lead inductances are incorporated as part of the tuned circuit.

d. Limitations of transit time. (1) In low-frequency operation it is usually taken for granted that electrons leaving the cathode reach the plate instantaneously. Although nothing in nature happens instantaneously, no harm is done by this assumption, so long as the actual time of flight of electrons between the cathode and the plate is negligible compared to the duration of one cycle. For example, transit time of 1/1000 of a microsecond (10^{-9} second), which is not unusual, is only 1/1000 cycle at a frequency of 1 megacycle per second. However, the same transit time becomes one-tenth or a greater part of a cycle if the frequency is 100 megacycles per second or higher.

(2) It has been found experimentally that with the total transit time less than one-tenth of a cycle the tube operates satisfactorily. At transit times longer than one-tenth cycle the efficiency drops considerably. When the transit time approaches a quarter of a cycle at the oscillating frequency, the tube usually does not oscillate at all. This decrease in output is caused, in part, by the shift in phase between the plate current and the grid voltage and the decrease of the effective resistance between grid and cathode, which results from the relatively long transit time.

(3) For high efficiency in a self-oscillator, the electron current should be in phase with the grid voltage and 180° out of phase with the plate voltage. When the electron transit time becomes an appreciable fraction of a cycle, this relation holds only at the instant that electrodes are emitted from the cathode. Thus the solid curve in figure 428③ shows the plate current that leaves the cathode. This current is in phase with the

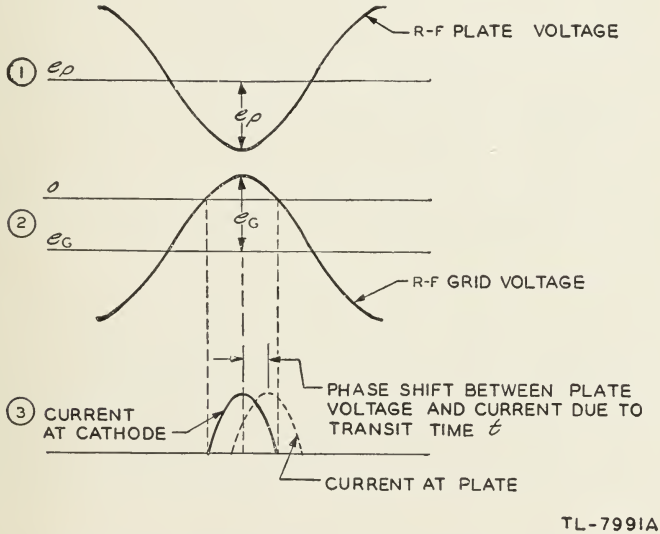

Figure 428. Phase shift between grid voltage and plate current because of transit time.

grid voltage, ②, and 180° out of phase with the plate voltage, ①. However, since it takes an appreciable part of a cycle for the electrons to travel from cathode to plate, the current which is arriving at the plate at any instant must be different from the current leaving the cathode at that same instant. If a maximum number of electrons start toward the plate

at the same instant, they will not arrive at the plate until a short time later. Thus, the electrons which actually strike the plate make up the plate current, which *lags* the current emitted from the cathode. Therefore the plate current, shown by the dashed curve in figure 428③, lags the grid voltage by some small angle, and the phase difference between the plate current and plate voltage is greater than 180°. As a result of this shift, the power output decreases and the plate dissipation increases.

(4) When an electron, which is a negative charge, approaches an electrode, it induces a positive charge on the electrode. As the electron approaches, the positive charge flows to the electrode; as the electron recedes, the positive charge flows away from the electrode. Thus, the electrons that form the plate current in a vacuum cause electrostatically induced currents in the grid as they move past it. In a low-frequency oscillator in which the grid is negative and the transit time is negligible, the number of electrons approaching the grid is always the same as the number of electrons going away from the grid. The current induced on one side of the grid by the approaching electrons is equal to that induced on the other side by the receding electrons. Since these currents are in opposite directions, the combined effect is zero.

(5) However, when the transit time of the oscillator is an appreciable part of a cycle, the number of electrons approaching the grid is not equal at all times to the number going away. As a result, the electrostatically induced currents do not cancel. Thus, grid current can flow in an ultra-high-frequency oscillator *even when the grid is negative relative to the cathode*. This current consists of a movement of positive charges back and forth in the grid structure. The effect of this current is to produce in the grid itself a loss which may be considered as a loss that takes place in an imaginary input resistor connected between grid and cathode. The resistance of this imaginary resistor decreases rapidly as the frequency rises. At ultra high frequenceies this resistance may become so low that the grid is practically short-circuited to the cathode, preventing proper excitation of the tube. This additional ultra-high-frequency grid loss raises its temperature, which may become another limitation on the frequency at which a tube may generate oscillations.

(6) Transit time may be decreased by reducing the spacing between electrodes, or by increasing the electrode voltages. Since insulation considerations prevent raising voltages greatly in many applications, tubes of special design are usually employed in applications where transit time effects may become serious. However, in many radar applications it is quite feasible to use plate voltages two or three times greater than the manufacturer's rating because the unusual way in which the tubes are operated prevents the average plate dissipation from exceeding a safe value.

92. NEGATIVE-GRID OSCILLATOR CIRCUITS. a. Concentric-line type. (1) Figure 429 shows the significance of the ever-increasing physical size of the tuning elements and tubes which creates an upper frequency limit for ultra-high-frequency oscillators. All three electrical circuits are resonant at 1.5 meters. The coil and capacitor tuned circuit is small compared to the relatively long lengths of the half-wave and quarter-wave concentric lines. The difference in the line lengths is caused by the fact that the half-wave line is open at both ends while the quarter-wave

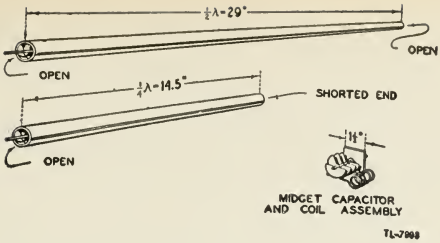

Figure 429. Comparison of size of coil and capacitor circuit and concentric lines.

line is shorted at one end. Both lines therefore are resonant at the same frequency.

(2) Figure 430 shows a concentric-line tuned-grid tuned-plate oscillator in which the grid circuit is tuned by a quarter-wave shorted concentric line. A small trimmer capacitor connected across the open end of the line may be used for fine adjustment of the resonant frequency.

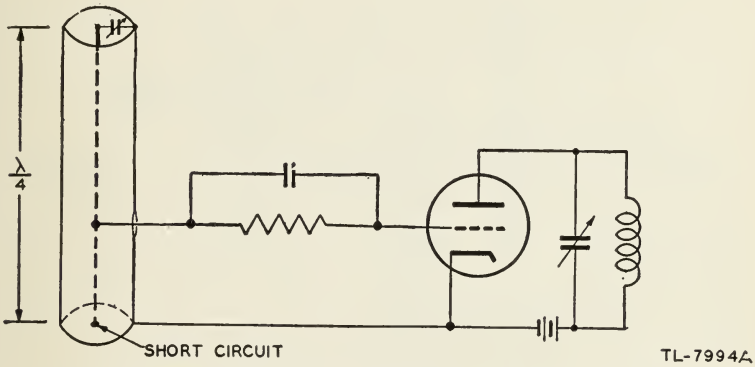

Figure 430. Concentric-line tuned-plate tuned-grid oscillator.

(3) The concentric line is well adapted for use in the frequency control of ultra-high-frequency oscillators because it is completely shielded and offers the required high Q. Although the line may be resonant if its effective electrical length is near any multiple of a quarter-wave, the Q of the circuit is *decreased* by making the length longer than a quarter-wave. The resonant frequency of a line is proportional to the product of the inductance and capacitance, which is the same for $\lambda/4$, $3\lambda/4$, $5\lambda/4$, and so on. However, at a specified frequency, the Q is proportional to the ratio of the inductance to the resistance. Since the inductance is the same for $3\lambda/4$, $5\lambda/4$, etc., as it is for $\lambda/4$ (fig. 358), this factor is constant for any resonant length of line. But, as the line length is increased, the total resistance is also increased, making the Q of the resonant circuit less. Since the power-handling capacity of an oscillator is limited by the break-down potential of the tuned circuit rather than by the amount of energy stored in the tank circuit, the use of a tuned line longer than a quarter-wave does not allow an oscillator to deliver higher

power. A line of large diameter must be used to prevent voltage breakdown between the two conductors if high power is to be generated.

b. Lecher-wire tuning elements. (1) Figure 427 shows a push-pull oscillator which makes use of resonant quarter-wave lines. Sliding bars or shorting strips are used for tuning. The grid bars may be varied for maximum stability, while the plate circuit can be adjusted for maximum output. Even though the plates are connected directly to the ends of the line, the loading on the line is comparatively light since the tubes are operated in series. Coupling to a resonant line may be accomplished by a hairpin loop about one-quarter of the length of the line.

(2) Figure 431 shows a typical circuit for an ultra-high-frequency oscillator using quarter-wave concentric lines as resonant circuits for both grid and plate. The small capacitor C_1 at the end of the grid line serves to short the line effectively at this point, thus making the line equivalent to a tank circuit (fig. 343③). Capacitor C_2 serves the same function on the plate line. In ultra-high-frequency circuits the filament cannot be grounded directly by means of a bypass capacitor, as at lower frequencies, because of the high filament-lead reactance at these higher frequencies. In the circuit shown, the effect of the filament-lead inductance is eliminated by making this inductance part of a tuned line. The line is a half-wave in

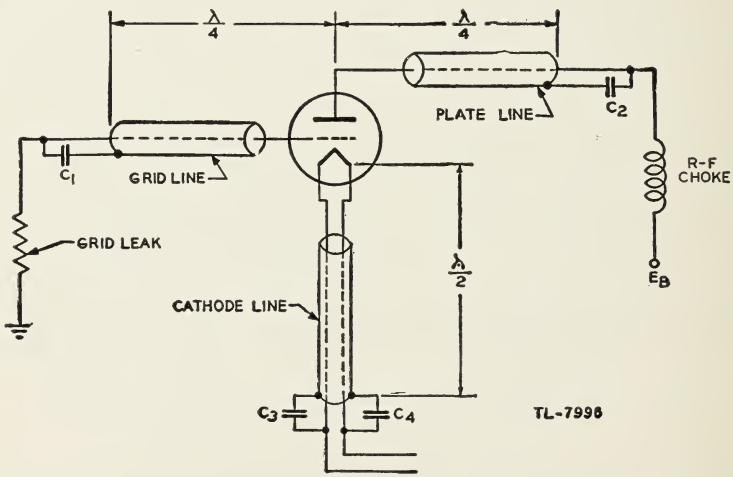

Figure 431. Ultra-high-frequency oscillator using quarter-wave concentric lines.

length from the cathode proper to ground, and is shorted effectively at the end away from the tube by the capacitors C_3 and C_4. Since a half-wave line shorted at the far end appears also to be shorted at the near end, C_3 and C_4 have the same effect as though they were connected directly from the cathode to ground *inside the tube at the cathode itself.*

93. POSITIVE-GRID OSCILLATORS. a. General. A postive-grid oscillator operates with the grid potential positive with respect to the cathode, and plate potential at zero or slightly negative. High-frequency oscillations can be generated by making use of the finite transit time of the electrons in a positive-grid tube. The tuned circuit is usually placed between the

grid and plate, but it may be connected between any two electrodes. The frequency of oscillations is usually dependent on the values of the components of the resonant circuit. Under certain conditions, however, the frequency of oscillation, over a limited range of values of the circuit components, is independent of the external circuit, and depends only on the transit time of the electrons from cathode to plate. Oscillations of this second type were first observed by Barkhausen and Kurz. Consequently, the circuit in which such oscillations are generated is named after the discoverers.

b. Theory of positive-grid oscillators. (1) To understand the action of a positive-grid oscillator, the motion of the electrons is first studied with the grid and plate potentials constant. In figure 432 an electron at L has just left the cathode K and is being drawn toward the highly positive grid G. By the time the electron reaches the grid, its velocity is high and it has gained energy by being accelerated. Either of two things may now happen. The electron may hit the grid and stop, delivering all of its energy to the grid in the form of heat; or the electron may pass through the space between the grid wires into the region between grid and plate. The positive grid still attracts the electron and the negative plate repels

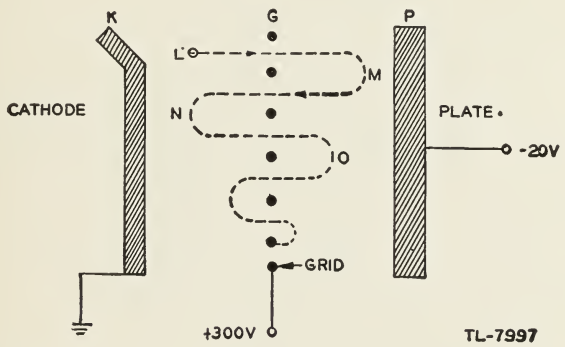

Figure 432. Electron motion in a positive-grid oscillator with constant electrode voltages.

it. These two forces cause the electron to slow down, and as it slows down it delivers its energy to the electric field between plate and grid. By the time the electron reaches the zero potential plane, at point M, it has lost all its energy and comes to rest for an instant. The attraction of the grid then causes the electron to move toward the grid again, so that the path that the electron follows is approximately that shown in figure 432. The electron acts like a ball attached to a rubber band, one end of which is firmly connected to the grid. If the ball is pulled over to the cathode and released, it is accelerated toward and travels past the grid, stretching the rubber band. When the energy that the ball possesses is transferred into stretch of the rubber band, the ball comes to rest for an instant. It will swing back and forth past the grid until at some time it hits one of the grid wires.

(2) The motion of the electrons is considerably different if the electrode potentials are not constant. Assume that there is superimposed on the steady grid voltage a sinusoidally varying voltage having a period equal to the time required for an electron to move from the cathode to

the vicinity of the plate. If an electron leaves the cathode at the instant that the alternating component of the grid voltage is zero and changing from negative to positive, the motion will be approximately as shown in figure 433①. During the time that the electron moves from the cathode

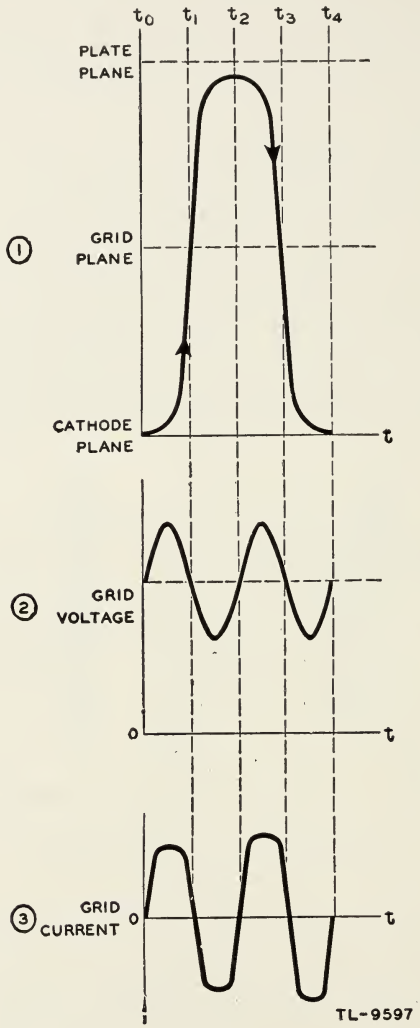

Figure 433. Motion of an electron that absorbs energy from source of alternating grid potential.

to the grid, the grid is more positive than it would be if in the absence of the a-c voltage. Thus the acceleration at every instant in this portion of the path is greater than the acceleration caused by the steady grid voltage. At the instant that the electron reaches the grid plane the alternating component of grid voltage reverses, so that the attracting force of the grid on the electron is reduced while the electron is traveling from the grid toward the plate. Because the acceleration caused by the relatively large grid voltage in the interval t_0-t_1 is greater than the deceleration caused by the reduced grid voltage in the interval t_1-t_2, the electron

will probably strike the plate and be eliminated. However, if the electron comes to rest before it reaches the plate, the fact that the acceleration in the interval t_2-t_3 is greater than the decelration in the interval t_3-t_4 will insure that this electron will either strike the grid or reenter the cathode during the next cycle.

(3) Because the acceleration of this electron is always greater than that provided by the steady grid voltage, and the deceleration is always less, the electron absorbs energy from the source of alternating grid voltage on both halves of the cycle. This electron therefore tends to damp out oscillation. However, the energy that the electron absorbs helps to eliminate it quickly from the interelectrode space. The energy absorbed by this electron causes the grid current to increase, as shown in figure 433③.

(4) An electron which is emitted a half-cycle later moves in the interelectrode space (fig. 434①). In this case the grid voltage is swinging

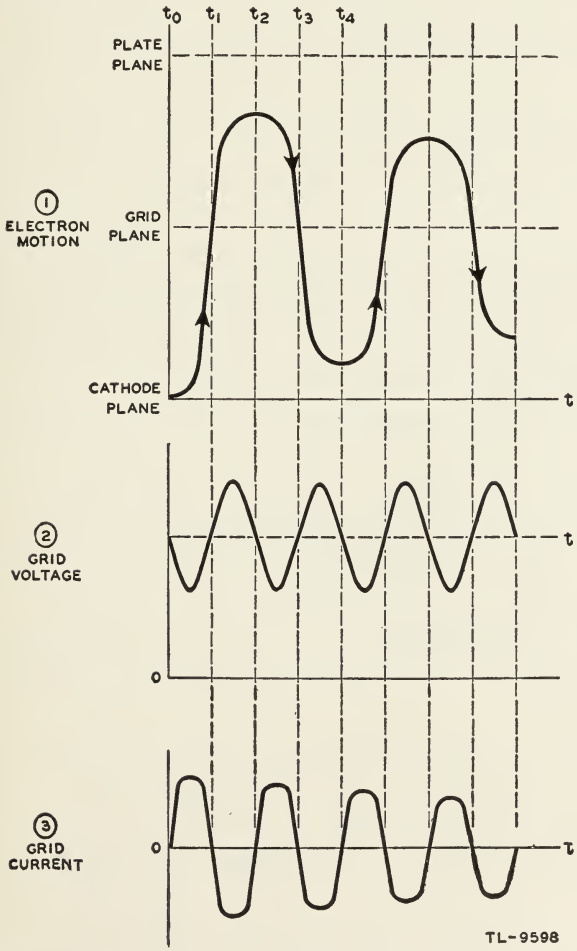

Figure 434. Motion of an electron that gives up energy to source of alternating grid voltage.

negative through zero as the electron starts. Thus the accelerating voltage is the difference between the steady grid voltage and the alternating grid voltage, and the electron is not accelerated to as high a speed as in the case shown in figure 433. In addition, the decelerating voltage acting on the electron while it is traveling from the grid toward the plate is greater than that provided by the steady grid voltage. As a result, the electron does not approach the plate as closely as before. Since the grid voltage is low in the interval t_2-t_3, the acceleration during this time is less than the deceleration caused by the large grid voltage in the interval t_3-t_4. Therefore the electron comes to rest before it reaches the cathode. The fact that the electron stops before it strikes the cathode, while it would have reached the cathode if the grid voltage were constant, indicates that the electron has lost energy to the source of alternating grid voltage.

(5) The moving electron induces on the grid a positive charge which moves toward the grid as the electron approaches, and away from the grid as the electron recedes. The effect of electrons oscillating about the grid is to produce an alternating current in the grid. Since the electron motion is in the same direction in both cases considered, the grid current in figure 434③ is of the same polarity as that in figure 433③. The grid current is in phase with the grid voltage in figure 433, indicating that the electrons absorb energy from the grid. However, in figure 434 the grid current is 180° out of phase with the grid voltage, indicating that the electrons deliver energy to the grid. The number of electrons which absorb energy from the grid is approximately the same as the number that deliver energy. However, the electrons that absorb energy are quickly eliminated from the interelectrode space, but those which deliver energy make several trips past the grid. As a result, the amount of energy delivered to the grid is greater than that which is absorbed. The net energy thus delivered to the grid tends to maintain oscillations in the resonant circuit connected to the tube, since the voltage drop caused by the induced current reinforces the existing voltage in the circuit.

(6) After the electron comes to rest at time t_4 in figure 434①, it may make another trip toward the plate. However, on this trip the electron starts from a point which is positive with respect to the cathode, so that the accelerating voltage is less than on the first trip. As a result, the distance that the electron can move is reduced. Ultimately the electron will strike the grid and be removed from the interelectrode space. On all trips, this electron contributes some energy to the grid, which accounts for the decreasing amplitude of the swing of the electron.

c. Barkhausen-Kurz oscillator. (1) A circuit in which ultra-high-frequency oscillations can be generated is shown in figure 435. The resonant circuit is a section of transmission line which is tuned to a quarter-wave-

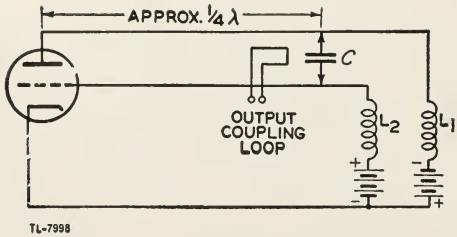

Figure 435. Barkhausen-Kurz oscillator.

length by the very low reactance of capacitor C. A capacitor is used as a shorting bar in this case to permit the grid to be held at a high positive potential and the plate at a slightly negative potential. The frequency of oscillation is controlled by the applied voltage and the spacing of the tube elements. The resonant line is used to provide voltage variations which are 180° out of phase on the grid and plate, but it may exert a slight control on the frequency of oscillation. The r-f chokes L_1 and L_2 are used to prevent loss of radio-frequency energy from the tuned line.

(2) The Barkhausen-Kurz oscillator can be used to generate oscillations in the frequency range of 30 to over 2,000 megacycles per second. Because many electrons contribute nothing to sustaining the oscillations, and other electrons even tend to damp them out, this type of oscillator is very inefficient. As the frequency rises, the efficiency decreases. A representative value of efficiency is 2 percent or less. Since the power output of this type of oscillator is very low, other tubes, such as the klystron and magnetron, are in greater demand as ultra-high-frequency generators. Consequently, this type of oscillator is not used in radar, but a knowledge of how it operates is useful in understanding other more practical tubes in which the frequency of oscillation also depends on electron transit time.

94. VELOCITY-MODULATED TUBES. a. General. A velocity-modulated tube is one in which the operation depends upon modulation or change in the speed of electrons passing through it. By means of this change of electron speed, the tube produces bunches of electrons separated by spaces in which there are few electrons.

b. Theory of operation. (1) The first requirement is to produce a stream of electrons, all traveling with the same speed. This is accomplished with an electron gun (fig. 436). The electrons are emitted from the heated cathode, and are attracted toward the accelerator grid which is maintained at a positive potential with respect to the cathode. Most of the electrons miss the grid wires and pass through the grid to form a beam of electrons, all traveling at the same speed.

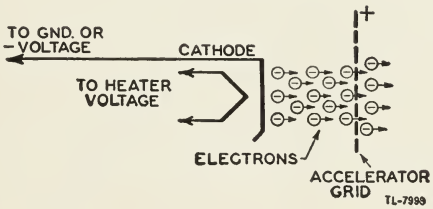

Figure 436. Electron gun.

(2) The beam of electrons is then passed through a pair of closely spaced grids, called *buncher grids,* each of which is connected to one side of a tuned circuit (fig. 437). The tuned circuit and the grids are at the same d-c potential as the accelerator grid. The alternating voltage which exists across the tank circuit causes the velocity of the electrons leaving the buncher grids to differ, depending on the time at which they pass through the grids.

(3) The manner in which the buncher produces groups of electrons can be understood by considering the motion of individual electrons. An electron that passes the center of the buncher at the instant that the alter-

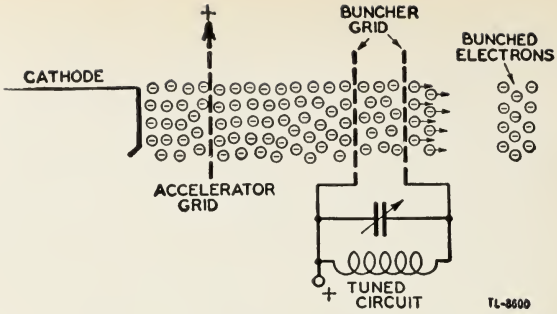

Figure 437. Buncher grids and electron gun.

nating voltage is passing through zero leaves the buncher at the same velocity with which it entered. The positions that these electrons will occupy are plotted against time in figure 438 at *A, E,* and *A′*. The slope

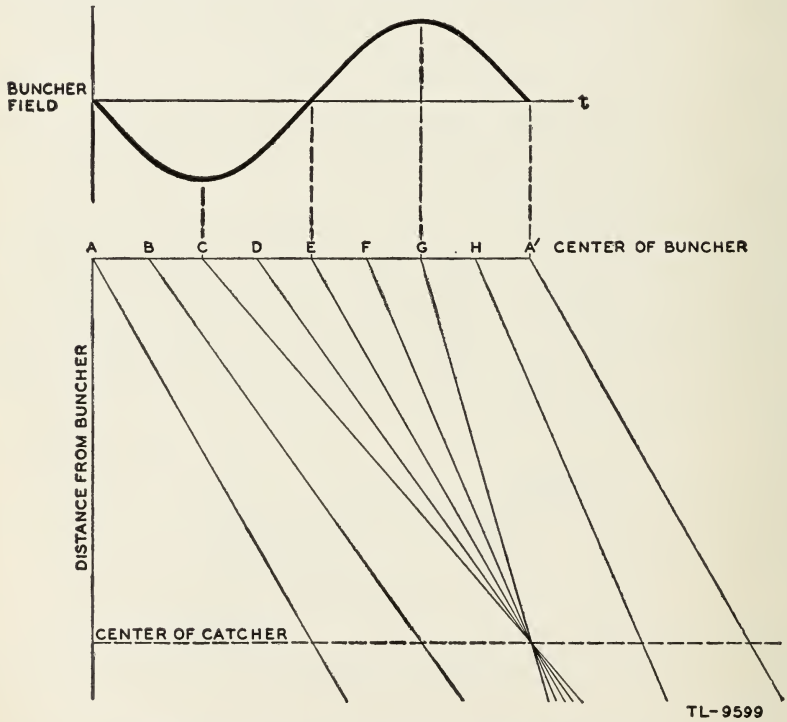

Figure 438. Electron bunching (Applegate diagram).

of these lines represents the velocity of the electrons. Electrons which pass the center of the buncher a few electrical degrees earlier than the point of zero voltage, as at *C* and *D,* leave with reduced velocity, since the decreased voltage of the buncher slows them up. Electrons that pass a few electrical degrees after the instant of zero voltage, as at *F* and *G,* leave with increased velocity, since the voltage of the buncher is now higher than that of the accelerator grid. If the space beyond the buncher is field-free, the faster electrons, *F* and *G,* will catch up with electron *E*

that left with unchanged velocity, and the slower electrons *C* and *D* will lag behind and hence draw near to *E*. At some point beyond the buncher grids, electrons *C, D, E, F,* and *G* will be close together in a group. Another electron, as at *A'*, that leaves the buncher a half-cycle later than *E* has its neighbors draw away. Consequently the electron stream down the tube consists of bunches of electrons separated by regions in which there are few electrons.

(4) These bunches are allowed to pass through a similar second set of grids called *catcher grids,* coupled to another oscillating circuit. If the relative grid potentials are as shown in figure 439①, when each bunch of electrons reaches the first grid of this set the field is such that it slows down the electrons and thus absorbs energy from them. By the time the

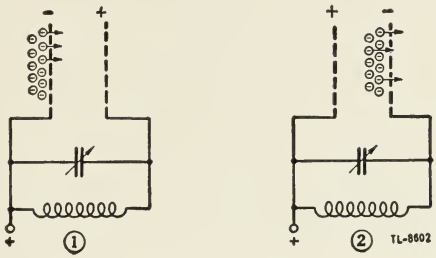

Figure 439. Change of catcher-grid polarity with oscillation.

bunch of electrons reaches the second grid of the set, the relative grid potentials are reversed, as shown in figure 439②, because it takes the group of electrons approximately a half-cycle to go from one grid to the other. Therefore, the second catcher grid also slows down the electrons, absorbing more energy from the electrons. Thus in delivering energy to the tuned circuit connected to the catcher grids the speed of the electrons is greatly reduced. After passing this second set of grids the spent electrons are removed from the circuit by a positive collector plate.

c. Klystron. (1) A vacuum tube containing the electron gun, grids, and plate described above is called a klystron (fig. 440). Energy may be coupled into or out of each tuned circuit by using small coils inductively coupled to the tuned coil or by using coupling capacitors. If the output from the catcher is fed back into the buncher, and if the proper phase and energy relations are maintained between buncher and catcher, the

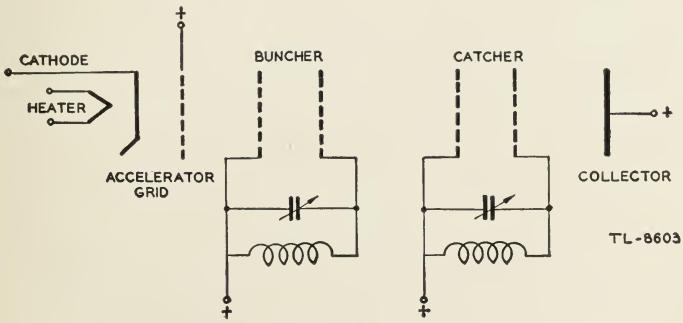

Figure 440. Klystron—schematic diagram.

tube operates as an oscillator. The successful operation of such a device requires that the energy needed for bunching be less than that delivered to the catcher. This amplifying action is possible because the electrons pass through the buncher in a continuous stream and through the catcher in definite bunches.

(2) Since a continuous stream of electrons enters the bunching grids, the number of electrons accelerated by the alternating field between the buncher grids on one half-cycle of oscillation is equaled exactly by the number of decelerated on the other half-cycle. Therefore the net energy exchange between the electron stream and the buncher is zero over a complete cycle, except for the losses that occur in the tuned circuit of the buncher.

(3) At the catcher a different situation exists. The electrons are traveling in bunches with the proper spacing so that they enter the catcher field only when the oscillating circuit is in its decelerating half-cycle. By this action more energy is delivered to the catcher than is taken from it. Thus the tube produces an amplification of power.

(4) The klystron may be used as an amplifier, oscillator, or mixer. For work at high frequencies the tuned circuits of the buncher and catcher usually are cavity resonators (fig. 441) in which a grid is attached to each side of the cavity. These resonant cavities are very efficient, and are so small at extremely high frequencies that the entire cavity may be

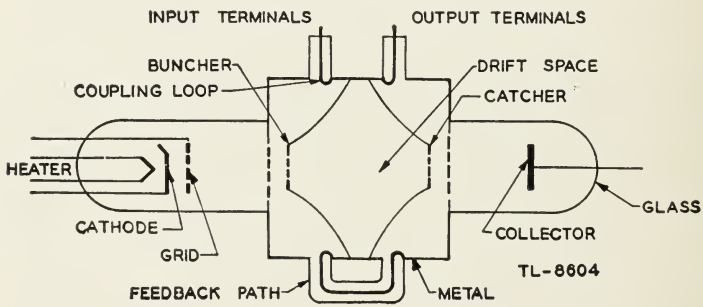

Figure 441. Klystron tube with cavity resonators.

sealed inside the envelope of the tube. In this case, the cavity is tuned by varying the spacing of the cavity grids. Thus a slight flexing of the tube varies the effective capacitance of the tuned cavity circuit. In another type of construction the grid connections are brought out through the envelope of the tube and an external cavity is used, clamped around the tube. In such a system, the cavity is tuned by changing its effective inductance. This can be done, for example, by screwing plugs into the periphery of the cavity. Energy may be coupled into or out of the cavity resonators by means of one-turn coupling loops, placed as shown in figure 441, which provide coupling with the concentric magnetic flux within the cavity. Energy is carried to or from these loops on coaxial lines.

d. Reflex klystron. (1) A klystron tube, especially one using cavity resonators, is very critical to adjust since the tuning and spacing of the cavities are interdependent. Therefore, when it is desired to use a velocity-modulated tube as an oscillator only, a simplified form called the reflex klystron (fig. 442) is used. This tube is so named because the same set of

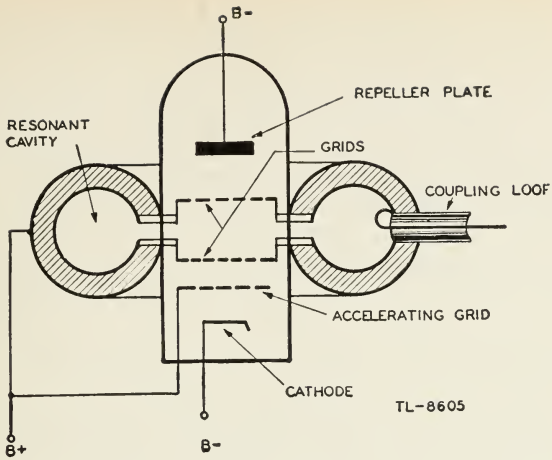

Figure 442. Schematic diagram of a reflex klystron.

grids is used for both bunching and catching, and a negative repeller plate is provided to force the electrons to retrace their paths after their first passage through the grids.

(2) By proper adjustment of the negative voltage on the repeller plate, the electrons which have passed the bunching field may be made to pass through the resonator again at the proper time to deliver energy to this circuit. Thus the feedback needed to produce oscillations is obtained and the tube construction is simplified. Spent electrons are removed from the tube by the positive accelerator grid or by the grids of the resonator. Energy is coupled out of the cavity by a one-turn coupling loop. The operating frequency can be varied over a small range by changing the negative potential of the repeller. This potential determines the transit time of the electrons between their first and second passages through the renator. However, the output of the oscillator is affected considerably more than the frequency by changes in the repeller voltage. This is because the output depends upon the fact that the electrons go back through the resonator just at the time when they are bunched and at exactly the decelerating half-cycle of oscillating resonator grid voltage. The volume of the resonant cavity is changed to change the oscillator frequency. The repeller voltage may be varied over a narrow range to provide minor adjustments of frequency.

(3) Three typical tubes of the reflex klystron type are the McNally tube, using an external cavity with screw plugs for tuning; the Pierce (or Shepard) tube, using a cavity sealed in the tube and tuned by means of flexing the tube envelope to vary the grid spacing; and the klystron 417, a large tube with built-on cavity tuned by flexing the sides of the cavity. These reflex klystrons are by far the most widely used types of local or beating oscillators in ultra-high-frequency receivers.

e. Other tubes. The entire field of velocity modulation is very new. Consequently many new and different tubes using these principles may be expected. At the present time tubes using these principles are the only ones offering possibilities as amplifiers as well as oscillators at extremely high frequencies.

95. MAGNETRONS. a. General. (1) Magnetron oscillators for generation of ultra high frequencies are classified as electronic oscillators and negative-resistance oscillators.

(2) An *elecronic magnetron oscillator* operates by reason of the elecron transit-time characteristics of a vacuum tube; that is, the time electrons take to travel from the cathode to the plate. This oscillator is capable of generating very large peak-power outputs at frequencies in the thousands of megacycles. Although its average output is small, it is especially well adapted for pulse-type operation.

(3) A *negative-resistance magnetron oscillator* operates by reason of a static negative resistance between its electrodes and has a frequency equal to the natural period of the tuned circuit connected to the tube.

b. Basic magnetron. The magnetron is a type of diode in which a magnetic field is set up perpendicular to the electric field existing between the cathode and the plate. The magnetic field is provided by an electromagnet in some instances and by a permanent magnet in others. Figure 443 shows a basic magnetron tube in which the magnetic field is supplied by a permanent magnet. The tube consists of a cylindrical plate with a cathode placed coaxial with it. The tuned circuit (not shown) in which oscillations take place is connected between plate and cathode.

c. Effect of magnetic field on electron flow. (1) When no magnetic field exists, heating the cathode results in a uniform and direct electron movement from the cathode to the plate surrounding it (fig. 443②). However,

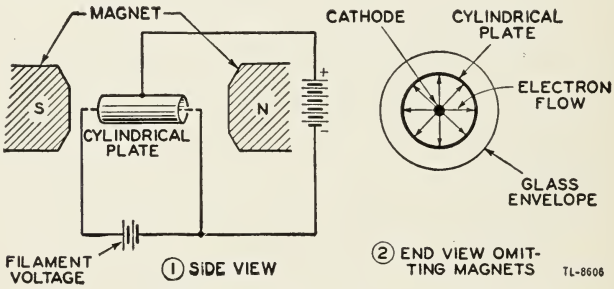

Figure 443. Basic magnetron.

as the magnetic field surrounding the tube is continually increased, a single electron is affected as shown in figure 444. In figure 444①, the magnetic field has increased to a point where the electron proceeds to the

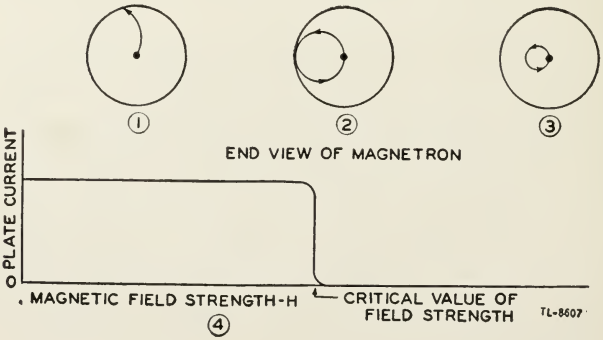

Figure 444. Effect of magnetic field on single electron.

plate in a curved rather than direct path. In figure 444②, the magnetic field has reached a value great enough to cause the electron just to miss the plate and return to the filament in a circular orbit. This value is the critical value of field strength. In figure 444③, the value of field strength has been increased to a point beyond the critical value, and the electron is made to travel to the filament in a circular path of smaller diameter.

(2) Figure 444④ shows how the magnetron plate current varies under the influence of the varying magnetic field. In figures 443② and 444① the electron flow reaches the plate, so that there is a measurable plate current flowing. However, when the critical field value is reached, the electrons are deflected away from the plate and the plate current drops abruptly to zero.

(3) When the magnetron is adjusted to the plate-current cut-off or critical field value and the electrons just fail to reach the plate in their circular motion, the magnetron can produce oscillations at an ultra high frequency by virtue of the currents induced electrostatically by the moving electrons. This frequency is determined by the time it takes the electrons to travel from the cathode toward the plate and back again. A transfer of ultra-high-frequency energy to a load is made possible by connecting an external circuit between the cathode and plate of the magnetron.

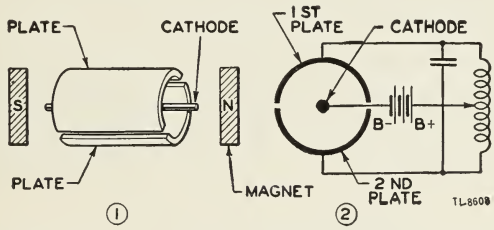

Figure 445. Split-anode magetron and its circuit.

d. Split-anode negative-resistance magnetron. (1) The split-anode magnetron is a variation of the basic magnetron which operates at a higher frequency and is capable of more output. Its general construction is similar to the basic magnetron, except that it has a split plate (fig. 445①). These half plates are operated at different potentials to provide an electron motion as shown in figure 446. The electron leaving the cathode and progressing toward the high potential plate is deflected by the magnetic field at a certain radius of curvature. After passing the split between the

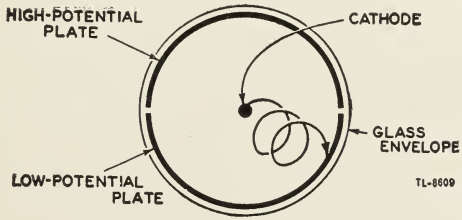

Figure 446. Movement of electron in split-anode magnetron.

two plates, the electron enters the electrostatic field set up by the lower-potential plate. Here the magnetic field has more effect on the electron,

which is deflected at a smaller radius of curvature. The electron then continues to make a series of loops through the magnetic and electric fields until it finally falls on the low potential plate.

(2) Oscillations can be started by applying the proper value of magnetic field to the tube. The value of field required is somewhat beyond the *critical value* which, for the split-anode tube, is the field required to cause all electrons to miss the plate when its halves are operating at the same potential. However, the alternating voltages impressed on the plates as a result of the oscillation generated in the tank circuit will cause electron motion such as that shown in figure 446, and current will flow. Since a very concentrated magnetic field is required for the negative-resistance magnetron oscillator, the length of the tube plate is limited to a few centimeters for a magnet of reasonable dimensions. In addition, a small-diameter tube is required to make the magnetron operate efficiently at ultra-high frequencies. Both of these facts greatly limit the plate size and therefore impose a serious limitation on the permissible plate-heat dissipation. For this reason, a heavy-walled plate is used to increase the radiating properties of the tube. To obtain still greater dissipation, tubes with high outputs use an artificial cooling method such as forced air or water cooling.

(3) The output of magnetrons is somewhat reduced by the bombardment of the filament by electrons which travel in loops (fig. 444② and ③). This effect causes an increase of filament temperature under certain conditions of high magnetic field and high plate voltage, and sometimes results in unstable operation of the tube. Filament bombardment can be reduced by operating the filament at reduced voltage. In some cases the plate voltage and field strength also are reduced to prevent destructive filament bombardment.

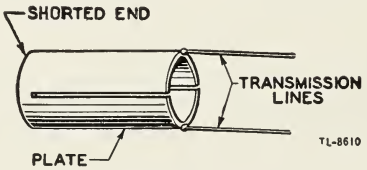

Figure 447. Plate tank circuit of magnetron.

e. Split-anode electron-resonance magnetron. (1) In this type of tube the plate itself may be so constructed as to resonate and function as the tank circuit. Thus, there are no external tuned circuits, and power is delivered directly from the tube to a transmission line (fig. 447). The tube constants and operating conditions are such that the electron paths are somewhat different from those in figure 446. Instead of having closed spirals or loops, the path is a curve having a series of abrupt points (fig. 448). Ordinarily this type of magnetron also has more than two segments in the plate. For example, figure 448 illustrates an eight-segment plate.

(2) This type of magnetron is the most widely used at present for ultra high and super high frequencies. Modern designs have a reasonably high efficiency and relatively high output. However, one disadvantage of the electronic magnetron is that its frequency of oscillation is not adjustable, since each tube is designed to operate on a particular frequency. In addition, its average power is limited by the filament emission and the

tube life desired. Furthermore, the peak power is limited by the maximum voltage which it can withstand without injury.

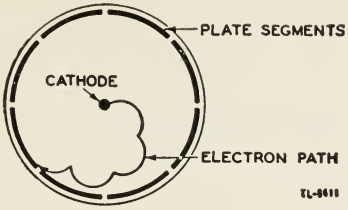

Figure 448. Electron path in electron-resonance magnetron.

f. Proper operation of magnetrons. (1) When a magnetron is supplied with a rectangular plate-voltage pulse of proper magnitude and duration and is itself operating as it should, the ultra-high-frequency output waveform should be as shown in figure 449①. If this output voltage is rectified and filtered, it appears as in figure 449②. If a nonrectangular pulse is supplied to the magnetron, or if the magnetron itself is not operating properly, the pulse envelope is not as shown in figure 449②. Hence, observation of the pulse envelope from a transmitter gives an indication

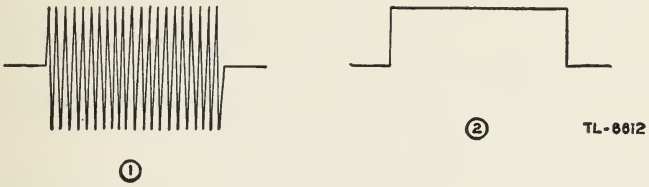

Figure 449. Output voltage of magnetron.

of the magnetron performance. In general, if the frequency or plate voltage of a magnetron changes, the power output changes, which also makes a change in the observed pulse-envelope height. As a further check on the operation of magnetrons, coaxial wavemeters are sometimes used to measure the wavelength of oscillation or to check the relative power outputs between different tubes.

(2) Under certain conditions, the frequency of the magnetron is very sensitive to the r-f tuning. In these cases, the mere variation in the impedance of the line resulting from faulty rotating joints or from other causes may shift the magnetron frequency by several megacycles.

(3) A magnetron must not have its plate voltage applied when the magnetic field is not present. If this is done, the plate may be bombarded and the tube destroyed almost at once.

(4) Another precaution to observe concerns the powerful permanent magnets which are frequently used to supply the magnetic field. Striking or jarring these magnets or touching them with a magnetic material such as a screw driver greatly lowers their field strength.

SECTION XIII

ANTENNAS

---

96. RADIATION. a. Fundamental concepts. (1) A current alternating at a radio frequency flowing in a wire of finite length can produce electromagnetic fields that may be disengaged from the wire and set free in space. The method of setting these waves free is discussed here.

(2) The principles of the radiation of electromagnetic energy are based on the laws that *a moving electric field creates a magnetic field* and *a moving magnetic field creates an electric field.* The created field at any instant is in phase in time with its parent field, but is perpendicular to it in space. Although previously a conductor was always considered to be present when a moving electric or magnetic field was mentioned, the laws which govern these fields say nothing about a conductor. *These laws hold true whether a conductor is present or not.*

(3) In figure 450① a piece of wire is cut in half and attached to the terminals of a high-frequency alternating-current generator. The frequency of the generator output is chosen so that each half of the wire is one-quarter of the wavelength of the generator output. The result is a common type of antenna known as a *dipole.*

(4) At a given time, the right side of the generator is positive and the left side negative. Since like charges repel, electrons will flow away from the negative terminal as far as possible while the positive terminal will draw electrons to it. Figure 450② shows the direction and distribution of electron flow. The distribution curve shows that most current flows in the center and none at the ends. There is no place for the electrons to go when they reach the end of the wire; therefore the current at the ends must be zero. The current distribution over the antenna will always be the same no matter how much or how little current is flowing, but the current amplitude at any given point on the antenna will vary directly with the amount of voltage developed at the generator terminals. The generator is a sine-wave generator; so the current amplitude, but not necessarily the current distribution, will vary as a sine wave.

(5) One-quarter of a cycle after electrons have begun to flow because of the voltage developed by the generator, the generator will develop its maximum voltage and the current will decrease to zero. At that time, the condition shown in figure 450③ will exist. No current will be flowing, but there will be a maximum amount of electrons at the left end of the

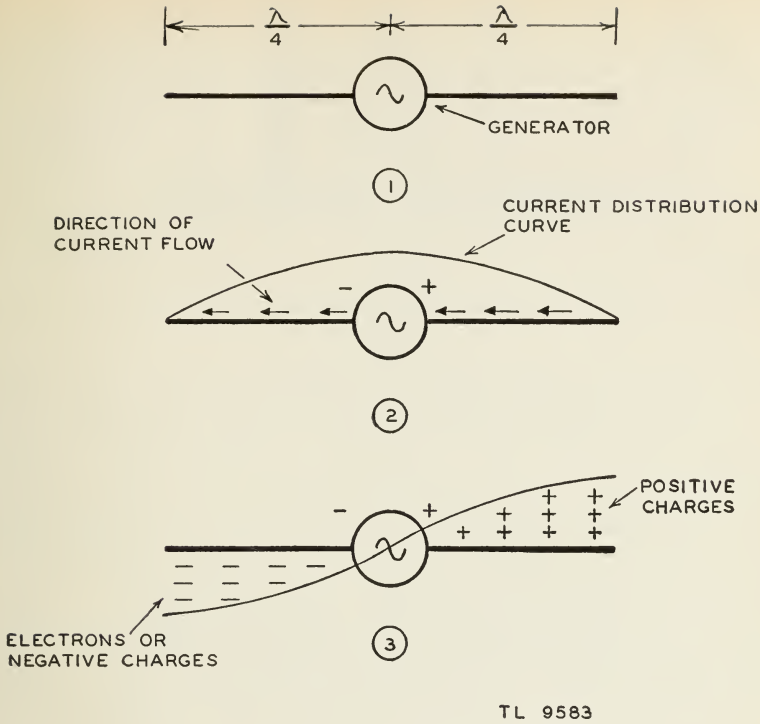

Figure 450. Development of an antenna.

line and a minimum at the right end. The distribution of the charges (and consequently voltage) will be as shown with most of the charges at the ends trying to get as far as possible from the generator terminals. As was true with the current distribution, the charge distribution along the wire will always be the same although the magnitude of the charge at any given point on the antenna will vary as the voltage of the generator varies.

(6) The conclusions which may be drawn from (4) and (5) above are:

(*a*) A current of which the amplitude varies sinusoidally with the generator voltage flows in the antenna. Its distribution must always be as shown in figure 450②.

(*b*) A sinusoidal distribution of charge, as shown in figure 450③, exists on the antenna. Every half-cycle the charges reverse position.

(*c*) The sinusoidal variation in charge magnitude lags the sinusoidal variation in current by one-quarter of a cycle or 90°.

b. Induction field. A current flows in the antenna; therefore a magnetic field, *H*, is set up around the antenna (fig. 451①). Separated positive and negative charges also appear on the antenna, causing an electric field, *E*, to be set up. This field is represented by lines of force drawn between the positive and negative charges (fig. 451②). Since the current and charges producing these fields are 90° out of phase, the two fields

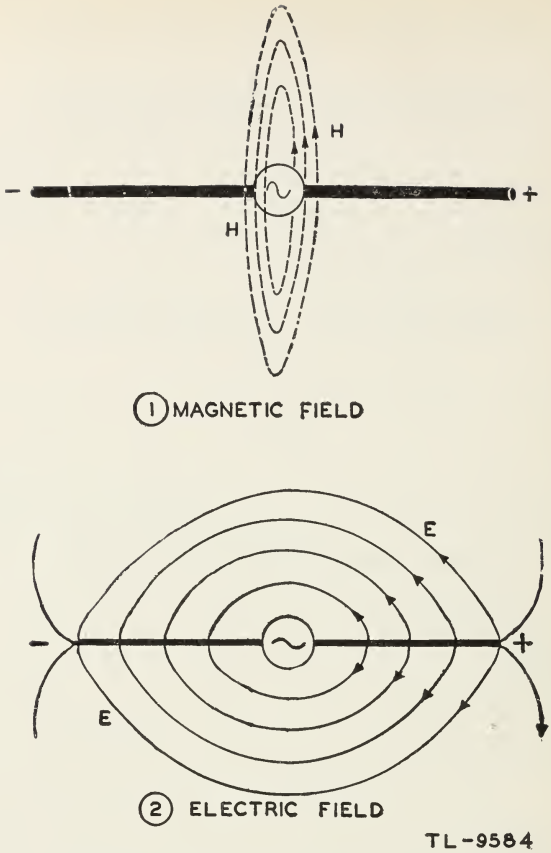

Figure 451. Fields around an antenna.

must also be out of phase 90°. Thus, in spite of the fact that they are perpendicular, these fields do not constitute the radiated electromagnetic field referred to in a(2) above. These fields constitute the induction field, the energy of which cannot be detached from the antenna. Its amplitude varies inversely as the *square* of the distance from the antenna, and consequently its effect is quite local.

c. Radiation field. (1) Consideration will now be given only to the electric field set up about the antenna. The charges producing this field are constantly moving from one end of the antenna to the other as the polarity of the voltage at the generator changes. At one instant, one end of the antenna is positive. An instant later, the antenna is uncharged. A negative charge next appears where the positive charge was; then the antenna is again uncharged and the whole cycle repeats.

(2) In figure 452① flux lines are drawn between positive and negative charges. An instant later in figure 452② the antenna is nearly discharged as the charges approach each other and bring together the two ends of the flux lines associated with them. When the charges do touch, they seem to disappear, and their flux line should also disappear. Most of the flux which represents the induction field does disappear, but some flux is repelled by other lines nearer the antenna and, as in figure 452③, the

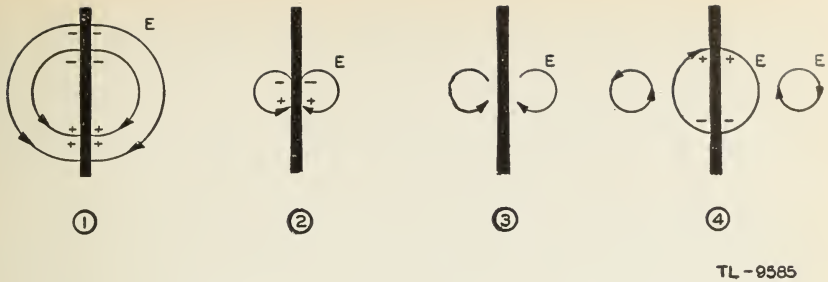

Figure 452. Creation of closed electric flux lines on a half-wave antenna.

repelled flux lines are left with their heads touching their tails. A closed electric field will be created without an associated electric charge.

(3) An instant after the independent field has been formed, the antenna charges again in the opposite direction and produces lines of force that repel the recently formed independent electric field. Figure 452④ shows that the repelling field is of the proper polarity to do this. The radiated field is forced away from the antenna at the speed of light.

(4) As previously stated, a moving electric field generates a perpendicular magnetic field in phase with it. Since the radiated electric field of the previous paragraph is moving, it generates a magnetic field in accordance with this principle. The result is a radiated electromagnetic field that can travel great distances and deliver a usable part of its energy to a receiving antenna.

(5) In the preceding discussion, the magnetic field generated by the antenna current has been ignored as a factor in generating radiated fields, but, by similar reasoning, magnetic lines of force may become detached from the antenna. Since these detached lines will move away from the antenna, they will generate a perpendicular in-phase electric field. The result is also a radiated electromagnetic field.

(6) The electromagnetic radiation from the antenna apparently is made up of two components: the electric-generated field and the magnetic-generated field. The two fields are identical in composition, but occur 90° out of phase in time. It can be shown that these fields will add and give a single sinusoidally varying radiated field.

d. Reception. If a radiated electromagnetic field passes through a conductor, some of the energy in the field will set electrons in motion in the conductor. This electron flow constitutes a current that varies in accordance with the variations of the field. Thus a variation of the current in a radiating antenna causes similar varying current in a conductor at a distant location. Any intelligence being produced as current in a transmitting antenna will be reproduced as current in any receiving antenna. The characteristics of receiving and transmitting antennas are quite similar, so that a good transmitting antenna is also a good receiving antenna.

97. BASIC ANTENNA PRINCIPLES. a. General. (1) An antenna is a conductor or system of conductors which serves to radiate or intercept energy in the form of electromagnetic waves. In its elementary form an

antenna or aerial may be simply a length of elevated wire like the common receiving antenna for an ordinary broadcast receiver. However, for communication and radar work, other factors make the design of an antenna system a more complex problem. For instance, the height of the radiator above ground, the conductivity of the earth below it, and the shape and dimensions of an antenna all affect the radiated-field pattern in space. Also, the antenna radiation often must be directed between certain angles in either the horizontal or the vertical plane or both.

(2) An antenna may be constructed to resemble a resonant two-wire line with the wires so arranged that the field produced by the currents in the wires add in some directions instead of cancelling completely. Figure 453① shows one way to provide a wide spacing by making the earth one conductor. In this manner the fields resulting from the current

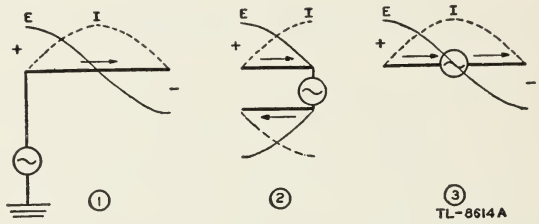

Figure 453. Half-wave antenna.

I expand considerably further into space than if the other conductor were near by, and therefore can be detached by rapid reversals much more easily. Another way to accomplish the radiation is to spread the ends of the two-wire line shown in figure 453② to the position shown in ③. The currents which cancel each other's fields in ② now aid in producing a field in space in ③ like that produced in ①.

(3) The antenna in figure 453① can be extended as shown in figure 454. Current flowing to the right is represented by a positive distribution curve, and current flowing to the left by a negative curve. Similarly, voltages at any point on the antenna are positive or negative according to the position of the voltage curve above or below the antenna. The

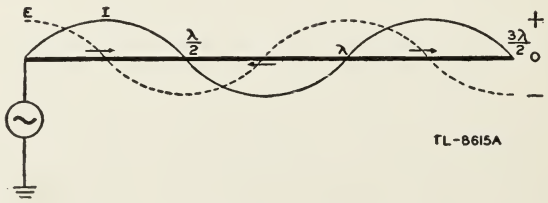

Figure 454. Multiple half-wave antenna.

effectiveness of such an antenna is not greatly increased since currents flowing in opposite directions side by side produce cancelling fields in some directions. The result is that the intensity of the radiated field at various points in space is considerably changed when compared to the field of the simple dipole.

(4) Nonresonant lines also can be expanded to antennas, but they prove inefficient. Resonant conductors are more efficient radiators since they have large standing waves of voltage and current and hence intense fields with a minimum of generator current and voltage. Thus the antenna of figure 453③ which is cut to an electrical half-wavelength, also radiates other frequencies, but its effectiveness as a radiator diminishes as the standing waves of current and voltage decrease.

b. Electrical length. If an antenna is made of extremely small wire and is isolated perfectly in space, its electrical length corresponds closely to its physical length. Thus in free space a one-wavelength antenna for 10 meters would be 10 meters in length, a two-wavelength antenna for 10 meters would be 20 meters in length, and a half-wavelength antenna would be 5 meters in length. In actual practice, however, the antenna is never isolated completely from surrounding objects and the velocity of the wave along the conductor is always less than the velocity in space. At frequencies above 30 megacycles a correction factor of approximately 0.95 must be used. While the physical length of an antenna varies with different installations, the following formula gives the physical length of a *half-wave* antenna for a given frequency. It does not apply to antennas longer than a half wave:

$$1 = \frac{492 \times 0.95}{f} = \frac{468}{f}$$

where 1 is length in feet and f is frequency in megacycles.

c. Antenna input impedance. (1) The antenna input impedance determines the antenna current at the feed point for the value of r-f voltage at that point. It may be expressed mathematically by Ohm's law for alternating current:

$$Z = E/I$$

where Z is the antenna impedance and E and I are the r-f voltage and current, respectively. Impedance is also expressed as

$$Z = \sqrt{R^2 + X^2}$$

where R and X are the input resistance and reactance, respectively.

(2) In a half-wave antenna, the current is a maximum at the center and zero at the ends, while the voltage is a maximum at the ends and minimum in the center. The impedance, therefore, varies along the antenna and is a minimum at the center and a maximum at the ends. In the case of a half-way antenna isolated in free space, the impedance is approximately 73 ohms at the center and 2,500 ohms (allowing for losses) at the ends. The intermediate points have intermediate values of impedance.

(3) Figure 455 is a plot of the input resistance and reactance of centerfed antennas of any length up to 2λ. The values are plotted against the half-length of the antenna. Both a thin and a thick antenna are plotted so that the effect of the diameter of the wire is apparent. The curves show that an antenna may be either inductive or capacitive depending on its length, and abrupt charges of impedance occur near the $\lambda/2$ and λhalf-lengths. The points in figure 455② where the reactance curves cross zero indicate the resonant lengths of the antenna. Because the curves are plotted in terms of the free-space wavelength, the effect of the reduced velocity of the wave motion along the antenna is shown by the curves. Thus, a half-wave antenna element is resonant only when

it is *less* than the free-space half-wavelength. This foreshortening is caused by increased capacitance associated with the elements. If the diameter of the radiator is large, for example $\lambda/500$, the capacitance is greater than for a thin element. As a result, the large-diameter radiator is foreshortened more than the thin radiator.

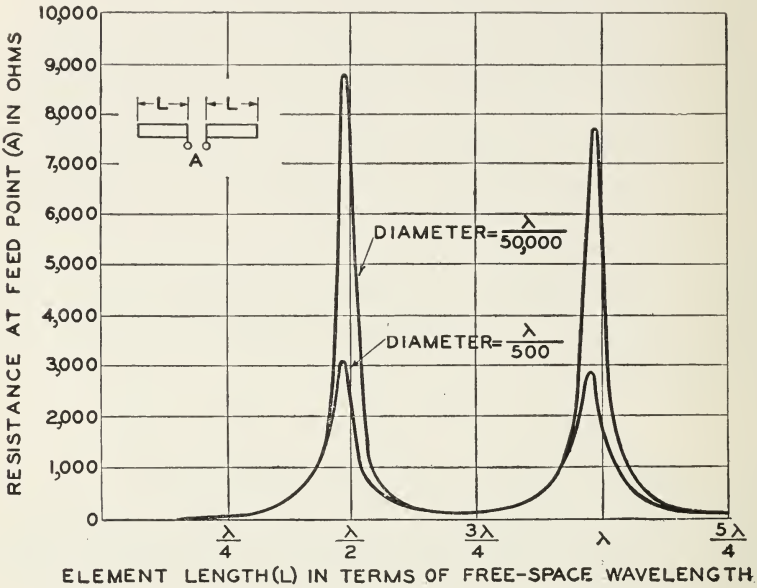

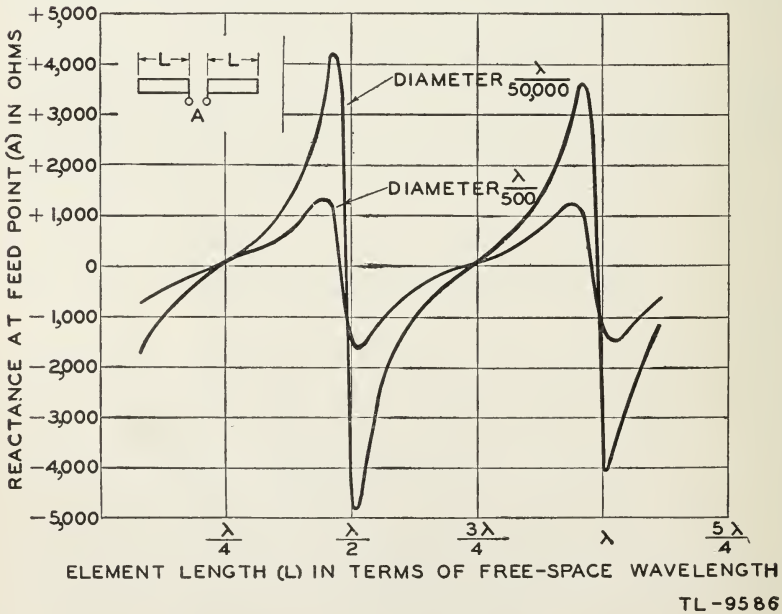

Figure 455. Impedance curves for a center-fed antenna.

(4) Figure 455 may be used to calculate the input impedance of center-fed antennas. The impedance of a thin (diameter $= \lambda/50{,}000$) antenna of half-length $5\lambda/8$ is given by the formula

$$Z = \sqrt{R^2 + X^2}$$

From the curves in figure 455, $R = 150$ ohms, and $X = -1{,}100$ ohms; therefore,

$$Z = \sqrt{150^2 + (-1{,}100)^2} = 1{,}110 \text{ ohms}$$

Thus, a feedline to a $5\lambda/8$ center-fed antenna in free space must be designed to present a reactance of $+1{,}100$ ohms and a resistance of $+150$ ohms for maximum transfer of energy to the antenna.

(5) The input impedance of an antenna is affected by the presence of nearby conductors. Any object that can be affected by the induction field will distort the field and the antenna voltage and current distribution. Therefore, the input impedance will be changed and necessary corrections must be made to obtain the best match to each antenna. Since this effect is almost always difficult if not impossible to calculate, corrections are usually determined by trial and error.

d. Radiation resistance. (1) Radiation resistance is an intagible resistance that is the measure of the actual radiation of energy into space. It is defined as the ratio of the total power radiated to the square of the effective value of the maximum current in the radiating system. For a half-wave antenna, this resistance is approximately 73 ohms and equals the input resistance of the center of the antenna. In general, however, the input resistance and the radiation resistance are not equal.

(2) Figure 456 shows how the radiation resistance varies with antenna length for an antenna in free space. For a half-wave antenna the radiation resistance is approximately 73.2 ohms, measured at the current maximum which is at the center of the antenna. For a quarter-wave antenna measured at its current maximum, the radiation resistance is approximately 36.6 ohms. The radiation resistance is also affected somewhat by the height of the antenna above ground and by its proximity

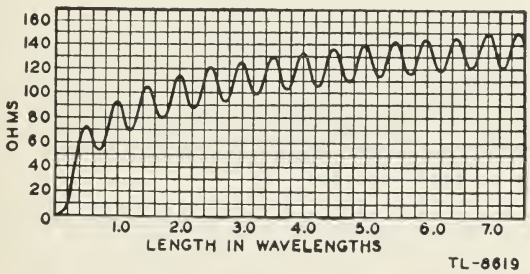

Figure 456. Radiation resistance of antennas measured at current maxima for various lengths.

to other nearby objects. Other small losses from an antenna are caused by the ohmic resistance of the conductor, corona discharge, and insulator losses.

e. Wave polarization. (1) The position of an antenna in space determines the polarization of the emitted wave. Thus an antenna which is vertical with respect to the earth radiates a vertically polarized wave,

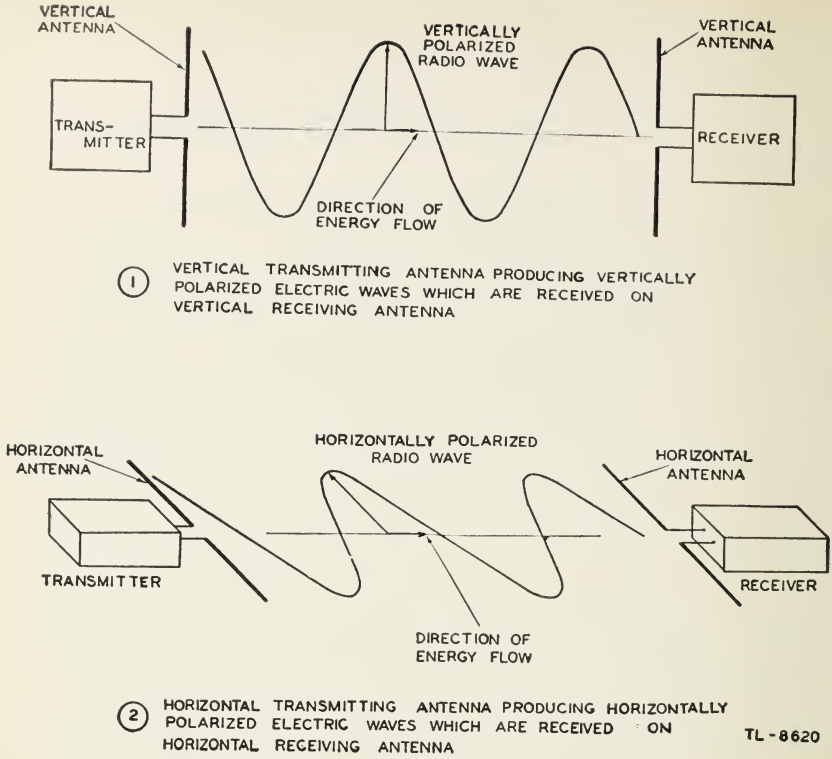

Figure 457. Vertical and horizontal polarization.

while a horizontal antenna radiates a horizontally polarized wave. Figure 457 shows the vertical electric field of a vertical antenna and the horizontal electric field of a horizontal antenna. For low frequencies this polarization continues to be the same while the radiated field travels through space. At high frequencies, however, the polarization usually varies, sometimes quite rapidly, because the wave splits into several components which follow different paths. These paths will not be the same length; therefore the recombined electric vectors will not be parallel in general. If this is the case, the path traced by the point of the resultant vector may be circular or elliptical and such a radiated field is known as either a circular or elliptically polarized field.

(2) When the antennas are close to the ground, vertically polarized waves yield a stronger signal close to the earth than do horizontally polarized waves. However, when the transmitting and receiving antennas are at least one wavelength above ground, the two types of polarization give approximately the same field intensities near the surface of the earth. When the transmitting antenna is several wavelengths above ground, horizontally polarized waves result in a stronger signal close to the earth than is possible with vertical polarization.

f. Field strength. Field strength, which refers to the value of the electric field at a given point, is measured in terms of volts per meter. One volt per meter is equivalent to a potential of 1 volt induced in an antenna wire 1 meter long. Since a volt per meter is too large a unit for most practical considerations, millivolts per meter and microvolts per meter

are used more frequently. For example, if 50 microvolts are generated between the ends of a conductor 1 meter long when a radiated wave cuts across it, the field strength is 50 microvolts per meter or 50 $\mu v/m$. At the higher frequencies the intensity of the electric field is usually greater at high altitudes than near the ground because of the cancelation caused by ground reflection.

g. Polar diagrams. The variation of signal strength around an antenna system can be shown graphically by polar diagrams, which are simply circular charts which resemble the face of a compass. Zero is taken at the center of the chart while its circumference is laid off in angular degrees. Computed or measured values of field strength then may be plotted radially in a manner that shows both magnitude and direction for a given distance from the antenna. Field strengths in the vertical plane are plotted on a semicircular polar chart and are referred to as vertical polar diagrams.

98. BASIC ANTENNAS. a. Half-wave dipole. A half-wave dipole consists of two lengths of wire rod, or tubing, each a quarter-wave long at a certain frequency. Sometimes known as a half-wave *Hertz* or half-wave *doublet*, it is a basic unit from which many more complex antennas are constructed. It operates independently of ground and therefore may be installed far above the surface of the earth or other absorbing bodies. For a half-wave dipole, the current is maximum at the center and zero at the ends while voltage is minimum at the center and maximum at the ends.

b. Vertical grounded antenna. (1) The vertcial quarter-wave antenna acts like one-half of a half-wave antenna, and the ground or earth acts as a mirror to supply the missing quarter-wave section (fig. 458). The

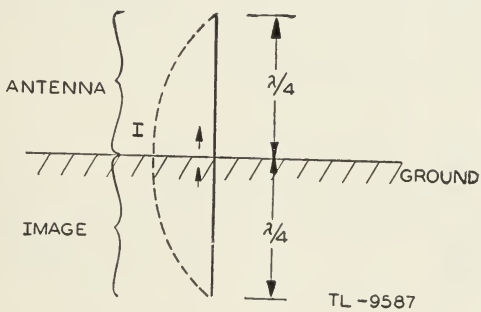

Figure 458. Vertical quarter-wave grounded antenna.

current maximum of a quarter-wave vertical antenna, therefore, is at the base rather than at the center of the antenna, as in the case of the half-wave dipole. Sometimes this type of of grounded antenna is referred to as a *Marconi* antenna.

(2) A vertical grounded antenna must be an odd number of quarter-wavelengths long if resonance is to be obtained at the base. For example, if the antenna is less than a quarter-wavelength high, it will be capacitive at the base, and a coil must be added in series to make it resonant. If the antenna is over a quarter-wavelength high, but less than a half-

wavelength high, the input at the base will be inductive, requiring the addition of a capacitor in series with the feed to make the input resonant.

(3) The current distribution on a vertical grounded antenna must always be such that the current is zero at the top end. The magnitude of the current increases as the distance from the top is increased, until the current reaches a maximum a quarter-wave from the top of the antenna (fig. 458).

99. RADIATION PATTERN FOR HALF-WAVE ANTENNAS. a. General. Since the current is greatest at the center of a dipole, maximum radiation takes place at this point and practically no radiation takes place from the ends. If this antenna could be isolated completely in free space, its radiation would be at right angles to the plane of the conductor and would encircle the conductor completely. The shape of the radiation pattern would resemble a doughnut with the antenna wire passing through its center (fig. 459①).

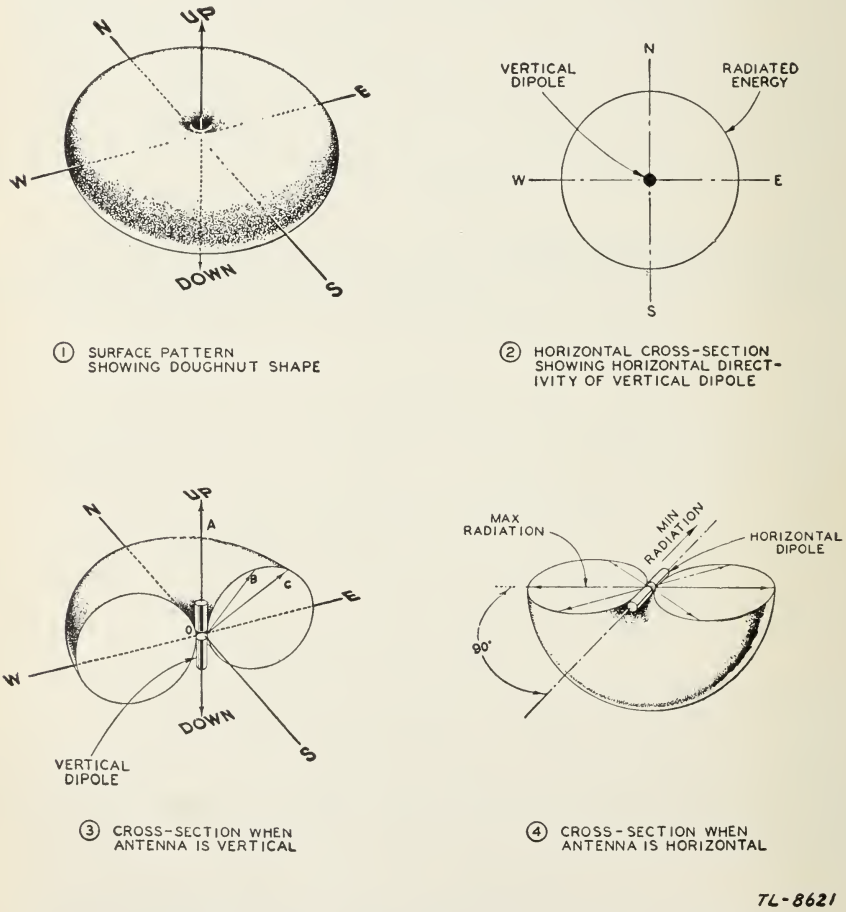

Figure 459. Radiation pattern of dipole.

b. Vertical dipole. The vertical dipole radiates equally in all directions in the horizontal plane. Figure 459② shows the field pattern in the

horizontal plane which is obtained from a vertical dipole. Since a circular field pattern is created, the field strength is the same in any compass direction.

c. Vertical radiation. Theoretically the vertical dipole in free space has no vertical radiation along the direct line of its axis. However, it may produce a considerable amount of radiation at other angles measured to the line of the axis. Figure 459③ is a vertical cross-section of the radiation pattern shown in figure 459①. The radiation along OA is zero but at another angle represented by AOB there is appreciable radiation. At AOC, the radiation is still greater. Because of this vertical directivity or variation in field strength at different vertical angles, a field-strength pattern taken in a horizontal plane of a vertical half-wave antenna must specify the vertical angle of radiation for which the pattern applies.

d. Horizontal dipole. If a horizontal dipole is used, the free-space pattern of figure 459① applies if it is rotated 90°. Thus figure 459④ shows the doughnut pattern for a horizontal half-wave dipole cut in half. The maximum radiation takes place in a line perpendicular to the center of the antenna. As the angle decreases from 90° the radiation also decreases. This variation is shown by the relative lengths of the vectors. Thus the horizontal dipole has a decided bidirectional characteristic in the horizontal plane.

100. FOLDED DIPOLES. A single dipole presents a resistance of about 73 ohms when measured at the center. This relatively low input impedance may be preferable in some cases in which a low-impedance transmission line is to be used to feed the dipole. In other cases, however, in which an open-wire line is the method of feeding, a higher-impedance feed point on the antenna is more desirable. If two or more dipoles are connected as shown in figure 460 the input impedance can be increased because the total length of the radiating element is now approximately one wavelength, so that the antenna is fed with high voltage and low current. This two-wire half-wave doublet consists of two parallel, close-

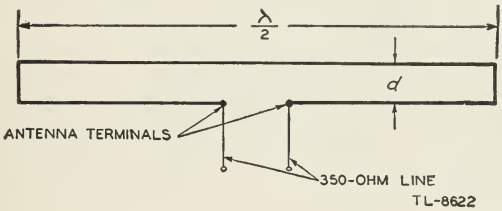

Figure 460. Folded dipole.

ly spaced half-wave wires connected together at the ends and fed in phase. Very small spacing d between the wires, for example $\lambda/100$, can be used for wavelengths above approximately ½ meter. With the antenna in free space, the input impedance is about 300 ohms. Thus it is practical to connect an open-wire transmission line of this impedance directly to the terminals of the antenna without a matching transformer.

101. ANTENNA FEEDLINES. a. General. The process of supplying power to the antenna is termed *feeding* or *exciting* the antenna. There are

two primary types of feed systems: the resonant line and the nonresonant line. If a half-wave antenna is fed at its end where the voltage is at a maximum, the antenna is said to be *voltage fed*. On the other hand, if it is fed in the center where the current is at a maximum, it is said to be *current fed*.

b. Resonant line. The resonant transmission line is not widely used as an antenna-feed method because it tends to be inefficient and is very critical with respect to its length for a particular operating frequency. However, in certain high-frequency applications, resonant feeders sometimes prove convenient.

c. Nonresonant line. The nonresonant feedline is the more widely used. The open-wire line, the shielded pair, the coaxial line, and the twisted pair may be used as nonresonant lines. This type of line has negligible standing waves if it is properly terminated in its characteristic impedance at the antenna end. It has a great advantage over the resonant line in that its operation is practically independent of its length.

102. DIRECTIONAL ANTENNAS. a. General. (1) All practical antennas are directive to some extent. In general, however, the term directional antenna refers to a radiating system which has been designed deliberately to concentrate its radiation in a relatively narrow beam.

(2) R-f energy can be reflected in much the same manner as light energy and under the same condition that the dimensions of the reflector must be large compared to the wavelength of the energy to be reflected. Parabolic metallic reflecting surfaces are used to beam the r-f energy in a fashion similar to beaming of light by an automobile headlamp. This type of beam transmission is most practical for ultra-high-frequency use in which the physical dimensions of the radiating systems are small.

(3) Directional effects are also produced by the use of two or more antennas so spaced and phased that radiation from the antennas adds in some preferred directions and cancels in other directions.

b. Principle of two-element array. (1) When two antennas *A* and *B*, a half-wave apart, are excited in phase, their radiation is concentrated along a line at right angles to their plane (fig. 461).

(2) The reason for this directional effect is as follows: Since the currents of *A* and *B* are equal and in phase, the fields radiated at any instant are identical in polarity, phase, and amplitude. However, by the time energy from *A* reaches *B*, because of the time required for

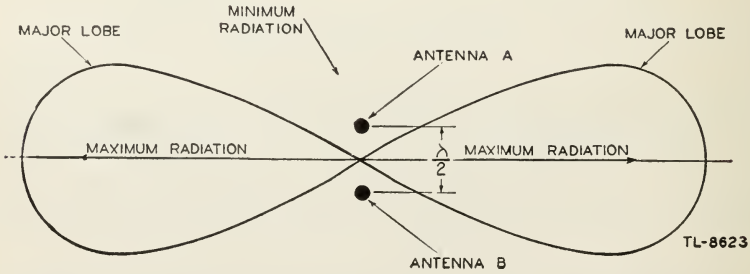

Figure 461. Horizontal radiation pattern of two vertical antennas spaced a half-wave apart and fed in phase.

energy to travel a half-wavelength, the phase of the energy in the field at B has changed by a half-wavelength or 180° and the two fields practically cancel. The same condition applies to energy radiated from B reaching A. Thus, the radiation in the plane of the two antennas is reduced to a negligible value. At the same time the radiation fields of the two antennas arriving at any point at right angles to the plane of the antennas are in phase and therefore add, producing a stronger radiation field at that point. This type of two-element array has a bidirectional field pattern, since the radiation is in the plane perpendicular to the array. If radiation is wanted in only one general direction, a different element arrangement must be used, or the elements must be fed out of phase.

(3) If two identical antennas are placed parallel to each other, spaced one quarter-wavelength or 90° apart, and driven with equal currents having a phase angle of 90°, the radiation pattern will be unidirectional. By the time the radio wave leaving antenna A in figure 462① reaches antenna B, the wave leaving antenna B will have the same phase so that the two waves add to produce maximum radiation to the right. However, by the time the radio wave leaving antenna B reaches antenna A

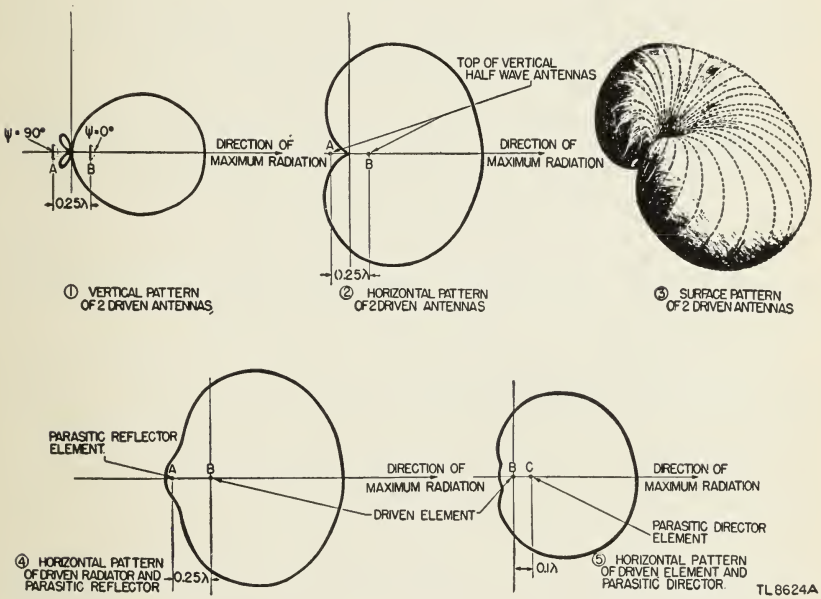

Figure 462. Radiation patterns of two antennas used to obtain maximum radiation in only one direction.

the wave leaving antenna A will be 180° out of phase, causing complete cancelation to the left. At other angles the waves add to give intermediate values as shown in figure 462① for the vertical plane and figure 462② for the horizontal plane. The solid surface pattern of figure 462③ gives a better idea of the radiation in other directions.

c. Parasitic elements. (1) If an antenna slightly longer than a half-wavelength and not connected to a power source is placed paralled to and slightly less than a quarter-wavelength from a driven half-wave antenna,

it will act as a *parasitic reflector*. It absorbs power and reradiates it with such a phase relation to the original radiation that the fields of the two antennas add in one direction and subtract in the other, producing the field pattern shown in figure 462④. A parasitic element shorter than a half-wavelength placed parallel to and slightly less than a quarter-wavelength from a half-wave driven antenna is a director. It absorbs power and reradiates it with such a phase relation that the fields of the two antennas add in the direction of the director as shown in figure 462⑤.

(2) When the field produced by the driven antenna cuts the reflector, it induces a voltage in the reflector in such a direction as to produce a field opposite in polarity to the inducing field. If the reflector is properly designed, the induced field is comparable in magnitude to the inducing field. In practice the reflector is assumed to set up about 85 percent of the field of the driven antenna. Therefore, only a small amount of energy can travel beyond the reflector because two fields cancel when they are of opposite polarity and in time phase. However, by the time any energy from the reflector field reaches the radiating antenna, the time of one half-wavelength has elapsed since the initial radiation of energy and therefore the field of the antenna has reversed its polarity. Since the energy from the reflector arrives at the driven antenna exactly in time phase and having the same polarity, it adds to the antenna field. Thus, the effective radiation is in a direction away from the reflector.

d. Directivity of antenna. (1) The directivity of an antenna system refers to the sharpness or narrowness of its radiation pattern. An antenna with a sharp pattern in the horizontal plane has good *horizontal directivity*. An antenna with a sharp pattern in the vertical plane has good *vertical directivity*. Antennas which have directivity for transmitting exhibit similar directivity when used for receiving.

(2) A wide variety of field patterns can be obtained even with a simple directional system containing only one parasitic element. Two variables can change this pattern: the length or tuning of the parasitic element, and the spacing between the parasitic element and the driven element.

(3) The parasitic element should be spaced one quarter-wavelength from the driven element to provide the required cancelation and reinforcement of the radiation from the driven element. However, if the physical spacing is made less than a quarter-wavelength, the required time delay must be provided by electrical means. This process is an application of the fact that the current lags in a circuit which is predominantly inductive and leads in a circuit which is predominantly capacitive. Therefore, if a reflector parasitic element is placed less than one quarter-wavelength behind the driven element, for example, one-eighth wave or 45°, the current in this element can be made to lag by the same amount. Hence the resonant frequency of the reflector must be made slightly lower than that of the driven element so that it is sufficiently inductive at the operating frequency to produce the required 45° current lag. The reflector, then, must be slightly longer physically than the driven element.

(4) A similar consideration shows that when a director is spaced less than a quarter-wavelength in front of the driven element, its length must be made slightly less than that of the driven radiator. It then acts as a capacitive reactance and causes the current in the director to lead. It must be tuned to provide the lead in current which will cause the waves to add in the forward direction.

e. Power gain of antenna. (1) Power gain is a term used to express the power increase of one antenna over a standard antenna used for comparison, usually a half-wave antenna having the same polarization as the antenna under consideration. Power gain used in connection with directional antennas is usually measured in the optimum direction of the antenna. Power gain is sometimes called power ratio. In this case, either the ratio between the power in two antennas may be indicated, or the ratio of the front and back radiation from a unidirectional array may be represented.

(2) Figure 463 shows the effect of the element spacing on the power gain of an array as compared to the field strength of a half-wave antenna alone. Curve A shows the power gain for director spacings in wavelengths between a half-wave director and the driven half-wave radiator. Curve B shows the power gain for half-wave reflector spacings between the reflector and the driven half-wave radiator. Note that a reflector provides only a very small amount of gain when spaced at a distance of 0.10 wavelength from the driven element and that the gain falls off sharply at spacings of around 0.075 wavelength. The director, however, may have useful gain at much smaller spacings.

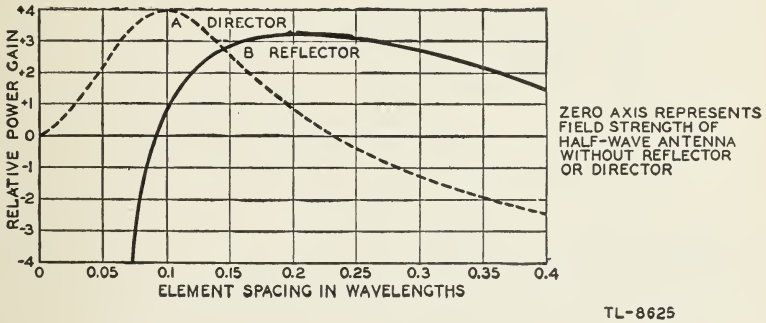

Figure 463. Relative power gains of parasitic arrays for different reflector and director spacings.

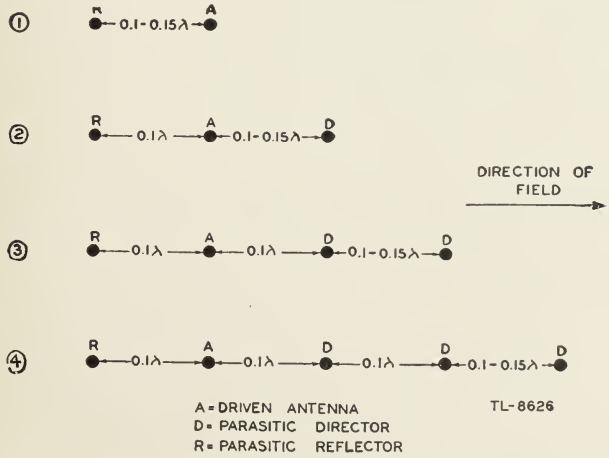

Figure 464. Examples of multielement parasitic antenna.

f. Multielement parasitic arrays. Several parasitic elements can be used in conjunction with a driven antenna to increase further the directivity and power gain. Various practical combinations of antenna, reflector, and director are shown in figure 464. The theoretical power gain of directional antenna arrays composed of an excited element and various numbers of parasitic elements is as follows:

Number of elements	*Power gain*
2	2.5
3	3.6
4	5.0
5	6.4

The advantages of multielement arrays are therefore apparent when a unidirectional powerful beam with a minimum front-to-back ratio is required. Arrangements such as shown in figure 464③ and ④ are often termed Yagi arrays. Figure 465, showing the type of pattern they produce, demonstrates how several parasitic elements concentrate radiation in a narrow beam.

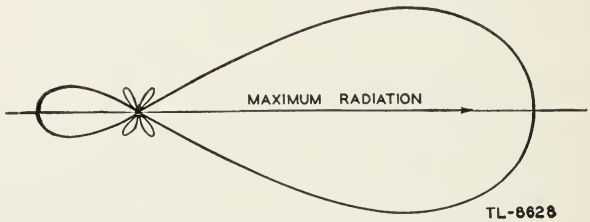

Figure 465. Field pattern produced by Yagi array.

103. PHASED ARRAYS. a. General. (1) The two most widely used types of phased systems are the *colinear* and the *broadside*. The colinear antenna consists of two or more half-wave radiators placed end to end and excited in phase. Maximum radiation is perpendicular to the axis of the elements and is bidirectional when the antennas are horizontal. When a colinear array is vertical above the ground it is sometimes called a Franklin antenna. The broadside antenna consists of two or more elements placed back to back or in parallel with each other. The maximum radiation is broadside to the plane of the elements and is also bidirectional.

(2) Another type of directional antenna sometimes used is the *end-fire array*. This antenna consists of two or more half-wave radiators placed parallel to each other but excited out of phase. The exact phase difference is dependent on the separation and the desired pattern. The maximum radiation is in the plane of the wires through the centers of the elements. Radiation from the end-fire array is either bidirectional or unidirectional depending upon the separation and phase difference of the elements.

b. Colinear antenna. (1) The simplest form of colinear antenna array consists of two horizontal antennas a half-wave long erected so that they are in line with their free ends directly opposite, and fed in phase (fig. 466①). The resulting radiation is in a direction at right angles to the plane of the antenna conductors. Three-element and four-element colinear arrays appear in figure 466② and ③. The field patterns for all three types are shown in figure 467. Note how the beam becomes sharper as the number of elements is increased.

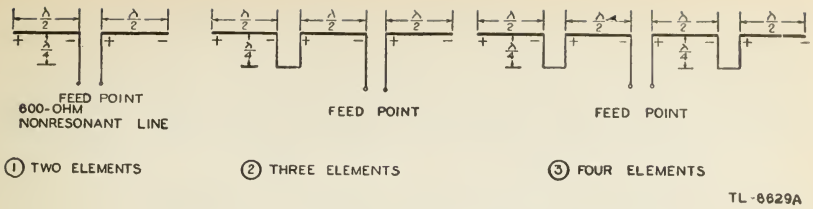

Figure 466. Colinear or Franklin antenna.

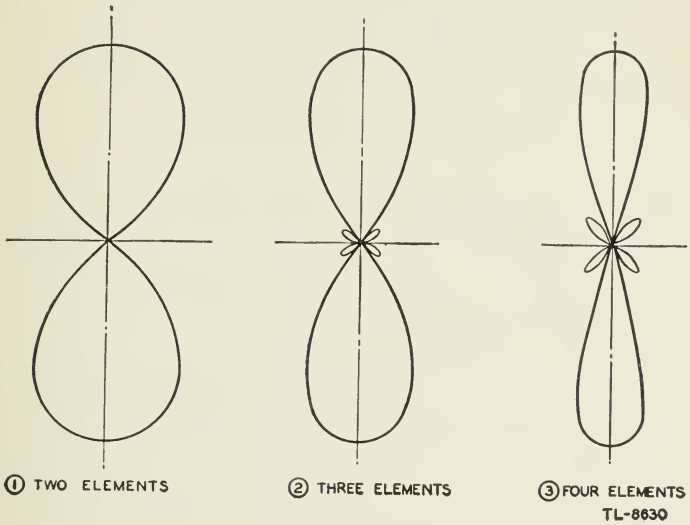

Figure 467. Horizontal field patterns for horizontal colinear arrays.

(2) Two half-wave sections in phase give a power gain approximately 1.6 greater than a single half-wave antenna. Three sections have a power gain of approximately 2.6, and four sections have a power gain of approximately 3.2.

(3) When a colinear system is oriented horizontally it has most of its directivity in the horizontal plane; when it is oriented vertically most of the directivity is in a vertical plane. A colinear system may be made unidirectional by the use of reflecting wire or a metal reflecting screen.

c. Broadside array. (1) If colinear elements are stacked above and below another set of similar elements the result is a broadside array. This array is sometimes called a billboard array, particularly when it is backed up by a sheet metal or screen reflector. Quite high power gains may be obtained with broadside arrays, depending on the spacing, number, and tuning of the elements.

(2) Figure 468 shows a broadside radiator consisting of a number of half-wave sections so arranged as to concentrate energy in a horizontally narrow beam and at very low angles above the horizon. This low-angle radiation is obtained by arranging several in-phase half-wave antennas one above the other and separating them by a half-wavelength. This method of stacking the dipoles practically eliminates vertical radia-

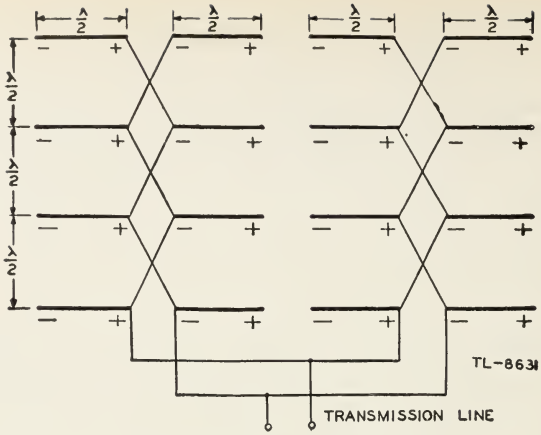

Figure 468. Broadside array.

tion. In all, sixteen horizontal half-wave antenna elements are shown, four in line horizontally and four in parallel vertically. Equivalent polarities and voltages on all adjacent elements are separated by a half-wavelength. This separation is accomplished by spacing the antennas a half-wavelength apart vertically and by transposing the half-wave transmission lines between antenna sections.

(3) Without a reflector this antenna would radiate a narrow beam of energy in both directions at right angles to the plane of the conductors. Unidirectional operation may be obtained by erecting a similar array of parasitic reflectors from one-tenth to one-quarter-wavelength behind the first antenna. Better results may be obtained with a sheet metal or metal screen reflector. Figure 469 shows the typical energy distribution from an antenna array like that shown in figure 468 but with a reflector added. The energy is in a well-confined beam approximately 20° wide.

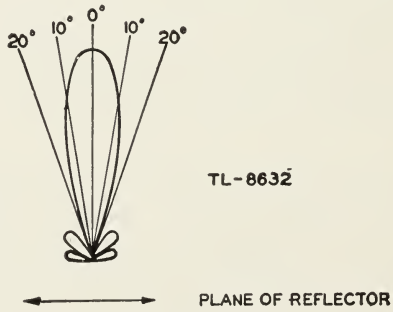

Figure 469. Field pattern for broadside array with reflector.

(4) If a still narrower beam than can be obtained from this antenna is required, additional units may be added either horizontally or vertically, depending upon the direction in which it is desired to restrict the radiation. The pattern of radiated energy may be made narrower in the vertical plane by stacking many elements one above the other. The pattern may be made narrower in the horizontal plane by adding many elements alongside each other. These arrays can be used with the elements placed either vertically or horizontally.

104. GROUND REFLECTIONS. a. Antenna images. (1) The total radiation from an antenna in effect is made up of two components. One component leaves the antenna directly, and the other is a ground reflection which appears to come from an underground image of the real antenna (fig. 470). This image is always considered to be as far below the

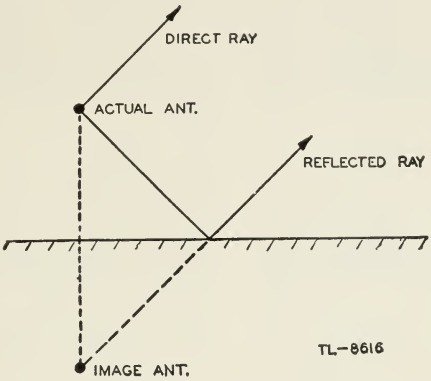

Figure 470. Reflected ray from antenna image.

ground as the real antenna is above it. The antenna need not be placed at the surface of the earth to produce the image. The image concept holds equally well for antennas above the surface and for antennas in front of large flat sheets of conducting material. The image antenna assumes a variety of forms depending upon the composition of the soil adjacent to the antenna.

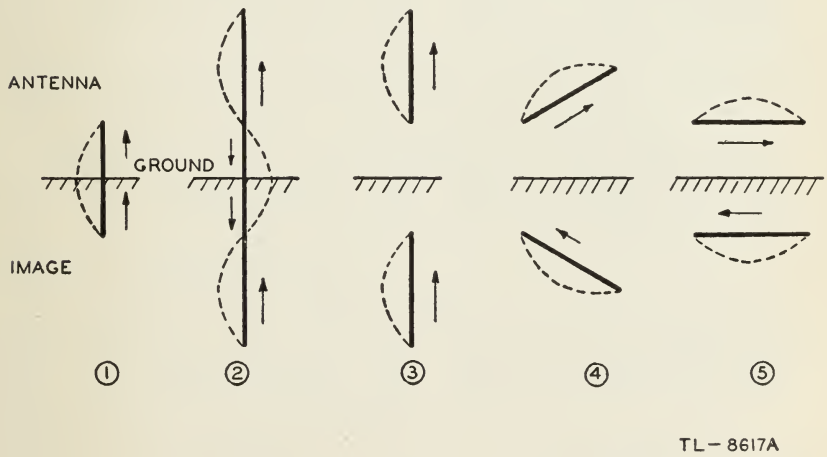

Figure 471. Current distribution in real and image antennas.

(2) Figure 471 shows current distributions for real antennas along with their images. The current distribution for quarter-wave and three-quarter-wave grounded antennas and their images is shown in ① and ②,

respectively. The images and current distribution for half-wave antennas in different positions above the surface of the earth are shown in ③, ④,

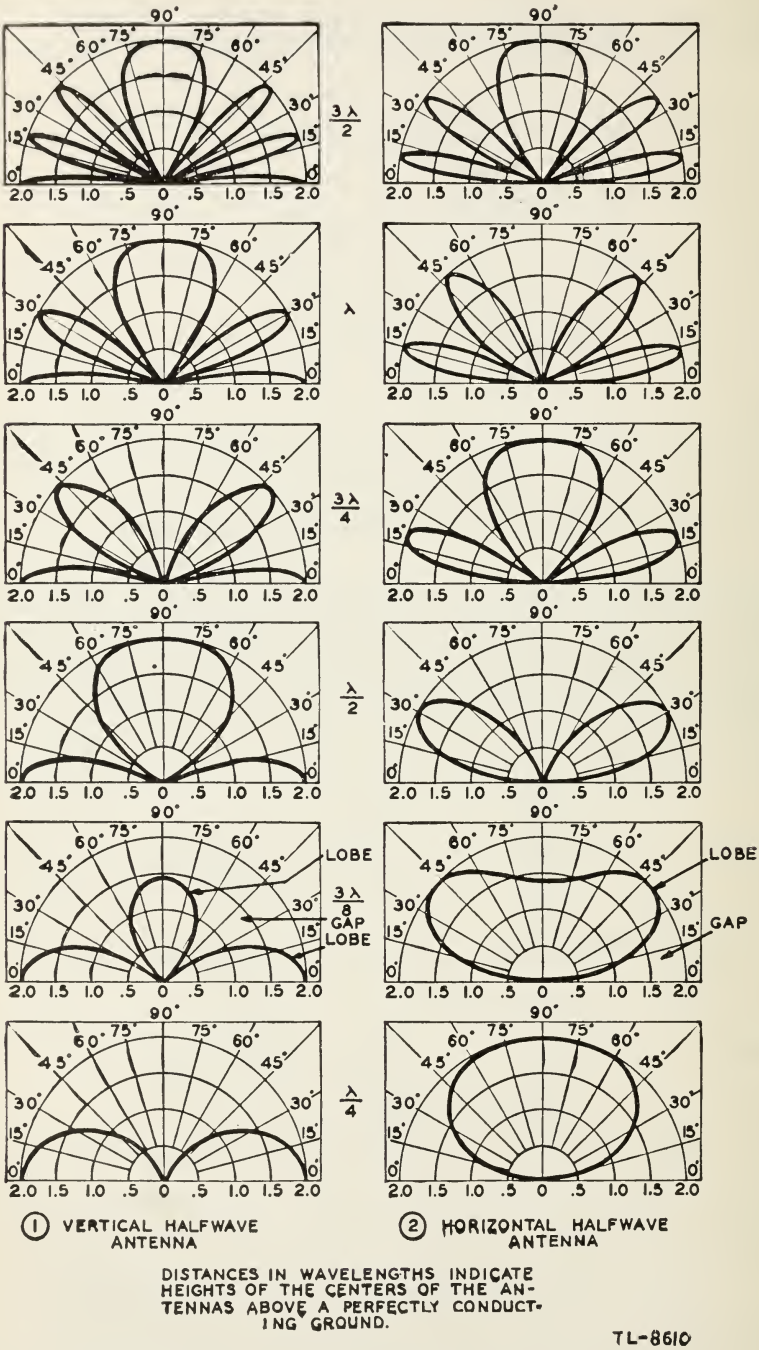

Figure 472. Variation of gaps and lobes for half-wave antennas of different heights.

and ⑤. It is particularly noticeable that the currents in the horizontal antenna and its image are flowing in opposite directions and therefore are 180° out of phase, while the currents in the vertical antenna and its image are flowing in the same direction and therefore are in phase. Thus the effect of ground reflection is different for horizontal antennas as compared with vertical antennas.

b. Height of antenna above ground. (1) The total radiated field in any direction from an antenna and its image is represented by the vector sum of the direct wave and the reflected wave. There are certain directions in which the direct wave from the real antenna and the reflected wave from its image are exactly equal in amplitude but *opposite in phase*. There are other directions in which the direct and reflected waves are equal in amplitude and *in phase*. Thus the resultant field strength may be either twice the field strength from the real antenna alone, or zero field strength or some intermediate value, depending on the direction and location of the point at which the field strength is measured.

(2) In figure 472, vertical polar diagrams are used to show graphically the result of ground reflection. These graphs are not plots of the radiation patterns of vertical antennas, but are simply multiplying factors representing the result of reflection from the ground. Figure 472① shows the ground-reflection factor for vertical half-wave antennas placed at distances ranging from one quarter-wave to three half-waves above the earth. Figure 472② shows the ground-reflection factor for horizontal half-wave antennas for the same heights above the ground. In both cases a perfectly conducting earth is assumed. As seen from the graphs, the additions or reinforcements of the radio waves in some directions and the subtractions or cancellations in other directions cause an antenna system to have a non-uniform vertical field pattern. Thus, where reinforcement occurs *lobes* are present, and where cancellation occurs *gaps* are in evidence. The main factors which determine the angle of elevation of the lobes and gaps in the vertical polar diagrams are the wavelength and the height of the antenna above ground. If the height of the antenna is large compared to the wavelength, the first lobe is at a very low angle. Although these graphs are subject to errors in that the earth is not a perfect conductor, on the whole they give satisfactory indication of the effects of ground reflection.

c. Vertical pattern of a directional array. (1) The vertical free-space pattern of a directional array is shown in figure 473①. If this array is located horizontally near the ground, all values of this pattern must be multiplied by the proper ground reflection factor to obtain a true picture of the field pattern.

(2) If the antenna is located horizontally $1\frac{1}{2}\lambda$ above the ground, the free-space pattern must be multiplied by the factor shown in figure 473②. The value of the field strength at every angle is multiplied by the value of the ground reflection factor at the same angle. The resultant vertical pattern is shown in figure 473③.

105. MICROWAVE ANTENNA SYSTEMS. a. General. The fundamental principles of antennas for use at microwavelengths are the same as those for use at lower frequencies. Microwave directive arrays containing several parasitic antennas may be built into a very small space. Likewise, directive arrays with parabolic and horn type reflectors which would be too bulky for use at the lower frequencies become very practical at microwavelengths because of their small physical size.

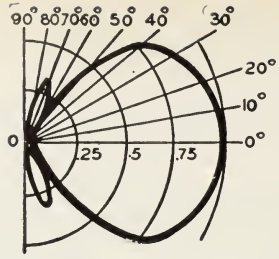

(1) VERTICAL PATTERN OF A HORIZONTAL ARRAY OF ANTENNAS IN FREE SPACE

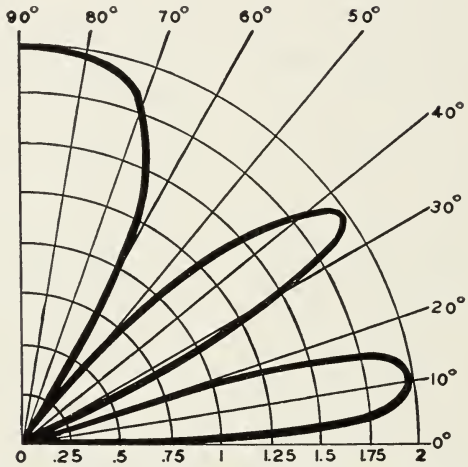

(2) GROUND REFLECTION FACTOR. HORIZONTAL ANTENNA 1 1/2 λ HIGH.

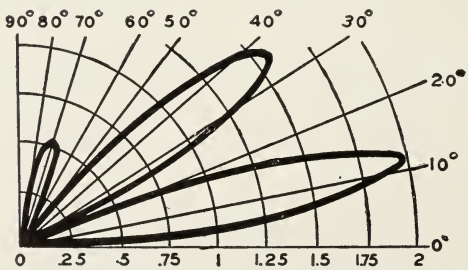

(3) DIRECTIONAL PATTERN IN A PLANE PERPENDICULAR TO THE GROUND OF AN ARRAY OF HORIZONTAL ANTENNAS 1 1/2 λ ABOVE GROUND.

TL-9588

Figure 473. Effect of ground reflections.

b. Parabolic reflectors. (1) Since microwaves have characteristics very similar to those of light waves, the parabolic reflector is an obvious directional device for use at these frequencies. If a dipole is placed at the

focal point A of figure 474, the parabolic reflector concentrates the radiation from the dipole into a beam in much the same manner in which

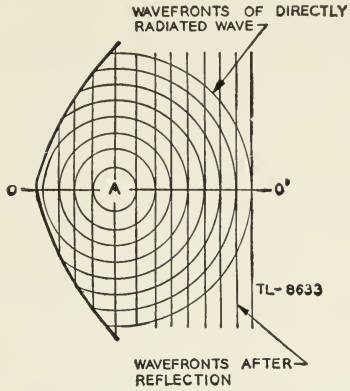

Figure 474. Parabolic reflector.

a searchlight reflector controls a light beam. The parabola thus converts the spherical waves as radiated by the dipole into vertical lines that represent the wave front after reflection.

(2) One form of parabolic reflector is known as the paraboloid of revolution or rotational parabola. This is the surface generated by the revolution of a parabola about its axis and somewhat resembles an eggshell cut in half. Figure 475 shows a cross-section view of a rotational

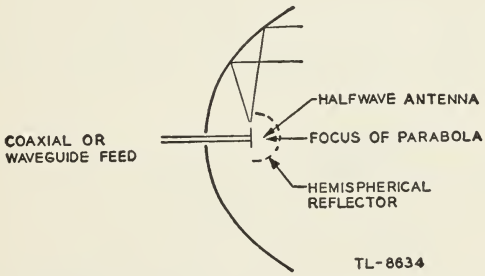

Figure 475. Paraboloid or rotational parabola—cross-section view.

parabola which is excited by a vertical antenna located at the focal point inside the parabola. A hemispherical shield is used to direct all the radiation back toward the parabolic surface. By this means direct radiation is eliminated, the beam is made sharper, and power is saved. Without the shield some of the power would leave the radiator directly. Since it would not be reflected, it would not become a part of the main beam and thus could serve no useful purpose.

Another method of accomplishing the same result is through the use of a parasitic array to direct the power back to the reflector. The radiation pattern of a rotational parabola contains a major lobe, which is directed along the axis of revolution, and several minor lobes (fig. 476). Very narrow beams are possible with this type of reflector.

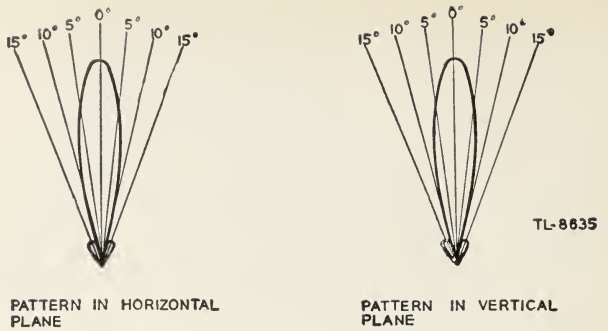

Figure 476. Typical directional pattern obtainable with rotational parabola antenna of figure 475.

(3) Another form of parabolic reflector is the cylindrical parabola with open or closed ends (fig. 477). Cylindrical parabolic reflectors have a parabolic curvature in one plane, usually the horizontal plane, and no curvature in any plane perpendicular to this horizontal plane. This type

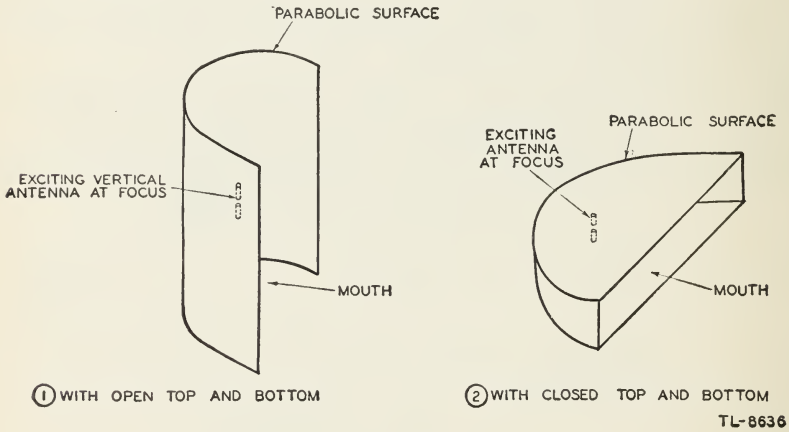

Figure 477. Cylindrical parabolas with open and closed ends.

of parabola normally is excited by an antenna placed parallel to the cylindrical surface and located at the axis of the parabola. The parabola should be so designed that the focus lies well within its mouth, in order that most of the radiated energy will be intercepted by the reflecting surfaces.

c. Horn-type radiators. (1) Horn radiators are frequently used to obtain directive radiation at microwavelengths. They are very practical in this frequency region because the dimensions, which must be large compared with the operating wavelength, do not involve unduly large physical sizes. Since they do not involve resonant elements, they have the advantage of being usable over a wide frequency band.

(2) The operation of a horn as an electromagnetic directing device is similar to that of acoustic horns. However, the throat of an acoustic horn usually has dimensions much smaller than the sound wavelengths

for which it is used, while the throat of the electromagnetic horn has dimensions which are comparable to the wavelength being used.

(3) Horn radiators are adapted readily for use with waveguides, since they may not serve not only to match the impedance of the waveguide to the external space, but also to produce directive wave patterns. The application of horn radiators is not confined to waveguide operation, for they may be fed by a coaxial or other type of line.

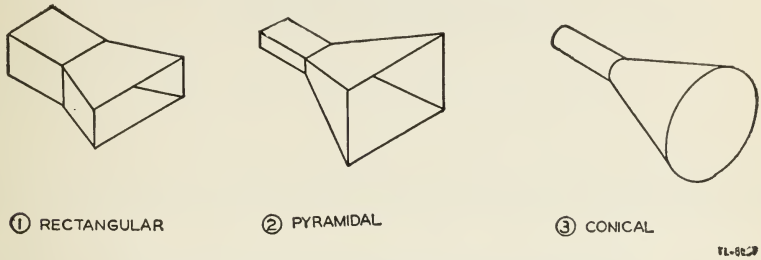

Figure 478. Different types of horn radiators.

(4) Horns may be constructed in a variety of shapes (fig. 478). The shape of the horn along with the dimensions of the mouth measured in wavelength determines the field-pattern shape for a given magnitude and the phase distribution of the field produced across the mouth of the horn. In general, the larger the opening of the horn, the more directive is the resulting field pattern. An aperture of approximately five wavelengths produces a radiated major-lobe of approximately 30°.

d. Corner Reflector. The corner-reflector antenna consists of two flat conducting sheets which meet at an angle to form a corner (fig. 479). This type of reflector is normally driven by a half-wave radiator which bisects the corner, with the maximum radiation being given out in the horizontal plane. This type of reflector has a somewhat greater gain than the parabolic type. The corner reflector has greatest gain where

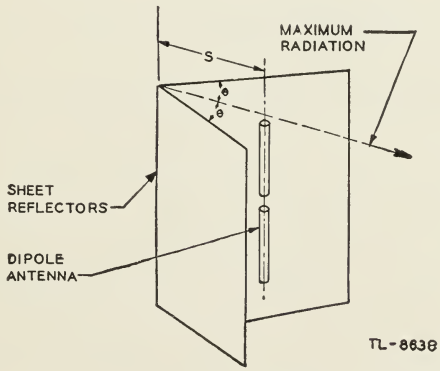

Figure 479. Corner reflector excited by single dipole.

the distance S is a half-wavelength and the angle between the sides is 45°. In addition, the corner reflector is easier to construct than the parabolic type. The sheets are made the same height as the dipole which excites the corner and about two wavelengths on a side. The side length is not critical but the dipole should bisect the angle accurately.

APPENDIX

GLOSSARY OF TERMS

Acorn tube. An acorn-shaped vacuum tube designed for ultra-high-frequency circuits. The tube has short electron transit time and low interelectrode capacitance because of close spacing and small size electrodes.

Align. To adjust the tuned circuits of a receiver or transmitter for maximum signal response.

Alternation. One-half of a complete cycle.

Ammeter. An instrument for measuring the electron flow in amperes.

Ampere (amp). The basic unit of current or electron flow.

Amplification (A). The process of increasing the strength of a signal.

Amplification factor (μ). The ratio of a small change in plate voltage to a small change in grid voltage, with all other electrode voltages constant, required to produce the same small change in plate current.

Amplifier. A device used to increase the signal voltage, current, or power, generally composed of a vacuum tube and associated circuit called a stage. It may contain several stages in order to obtain a desired gain.

Amplitude. The maximum instantaneous value of an alternating voltage or current, measured in either the positive or negative direction.

Amplitude distortion. The changing of a waveshape so that it is no longer proportional to its original form. Also known as harmonic distortion.

Anode. A positive electrode; the plate of a vacuum tube.

Antenna. A device used to radiate or absorb r-f energy.

Aquadag. A graphite coating on the inside of certain cathode-ray tubes for collecting secondary electrons emitted by the screen.

Array (antenna). An arrangement of antenna elements, usually dipoles, which results in desirable directional characteristics.

Attenuation. The reduction in the strength of a signal.

Audio frequency (a-f). A frequency which can be detected as a sound by the human ear. The range of audio frequencies extends approximately from 20 to 20,000 cycles per second.

Autodyne circuit. A circuit in which the same elements and vacuum tube are used as an oscillator and as a detector. The output has a frequency equal to the difference between the frequencies of the received signal and the oscillator signal.

Automatic gain control (agc) A method of automatically regulating

the gain of a receiver so that the output tends to remain constant though the incoming signal may vary in strength.

Automatic volume control (avc). *See* Automatic gain control.

Autotransformer. A transformer in which part of the primary winding is used as a secondary winding, or vice versa.

Azimuth. The angular measurement in a horizontal plane and in a clockwise direction, beginning at a point oriented to north.

Ballast resistance. A self-regulating resistance, usually connected in the primary circuit of a power transformer to compensate for variations in the line voltage.

Ballast tube. A tube which contains a ballast resistance.

Band of frequencies. The frequencies existing between two definite limits.

Band-pass filter. A circuit designed to pass with nearly equal response all currents having frequencies within a definite band, and to reduce substantially the amplitudes of currents of all frequencies outside that band.

Bazooka. *See* Line-balance converter.

Beam-power tube. A high vacuum tube in which the electron stream is directed in concentrated beams from the cathode to the plate. Variously termed beam-power tetrode and beam-power pentode.

Beat frequency. A frequency resulting from the combination of two different frequencies. It is numerically equal to the difference between or the sum of these two frequencies.

Beat note. *See* Beat frequency.

Bias. The average d-c voltage maintained between the cathode and control grid of a vacuum tube.

Biasing resistor. A resistor used to provide the voltage drop for a required bias.

Blanking. *See* Gating.

Bleeder. A resistance connected in parallel with a power-supply output to protect equipment from excessive voltages if the load is removed or substantially reduced; to improve the voltage regulation, and to drain the charge remaining in the filter capacitors when the unit is turned off.

Blocking capacitor. A capacitor used to block the flow of direct current while permitting the flow of alternating current.

Break-down voltage. The voltage at which an insulator or dielectric ruptures, or at which ionization and conduction take place in a gas or vapor.

Brilliance modulation. *See* Intensity modulation.

Buffer amplifier. An amplifier used to isolate the output of an oscillator from the effects produced by changes in voltage or loading in following circuits.

Buncher. The electrode of a velocity-modulated tube which alters the velocity of electrons in the constant current beam causing the electrons to become bunched in a drift space beyond the buncher electrode.

Bypass capacitor. A capacitor used to provide an alternating current path of comparatively low impedance around a circuit element.

Capacitance. The property of two or more bodies which enables them to store electrical energy in an electrostatic field between the bodies.

Capacitive coupling. A method of transferring energy from one circuit to another by means of a capacitor that is common to both circuits.

Capacitive reactance (X_c). The opposition offered to the flow of an alternating current by capacitance, expressed in ohms.

Capacitor. Two electrodes or sets of electrodes in the form of plates, separated from each other by an insulating material called the dielectric.

Carrier. The r-f component of a transmitted wave upon which an audio signal or other form of intelligence can be impressed.

Catcher. The electrode of a velocity-modulated tube which receives energy from the bunched electrons.

Cathode (K). The electrode in a vacuum tube which is the source of electron emission. Also a negative electrode.

Cathode bias. The method of biasing a tube by placing the biasing resistor in the common cathode return circuit, making the cathode more positive, rather than the grid more negative, with respect to ground.

Cathode follower. A vacuum-tube circuit in which the input signal is applied between the control grid and ground, and the output is taken from the cathode and ground. A cathode follower has a high input impedance and a low output impedance.

Characteristic impedance (Z_o). The ratio of the voltage to the current at every point along a transmission line on which there are no standing waves.

Choke. A coil which impedes the flow of alternating current of a specified frequency range because of its high inductive reactance at that range.

Chopping. *See* Limiting.

Clamping circuit. A circuit which maintains either amplitude extreme of a waveform at a certain level of potential.

Class A operation. Operation of a vacuum tube so that plate current flows throughout the entire operating cycle and distortion is kept to a minimum.

Class AB operation. Operation of a vacuum tube with grid bias so that the operating point is approximately halfway between Class A and Class B.

Class B operation. Operation of a vacuum tube with bias at or near cut-off so that plate current flows during approximately one-half cycle.

Class C operation. Operation of a vacuum tube with bias considerably beyond cut-off so that plate current flows for less than one-half cycle.

Clipping. *See* Limiting.

Coaxial cable. A transmission line consisting of two conductors concentric with and insulated from each other.

Coefficient of coupling (K). A numerical indication of the degree of coupling existing between two circuits, expressed in terms of either a decimal or a percentage.

Condenser. *See* Capacitor.

Conductance (G). The ability of a material to conduct or carry an electric current. It is the reciprocal of the resistance of the material, and is expressed in *ohms.*

Continuous waves. Radio waves which maintain a constant amplitude and a constant frequency.

Control grid (G). The electrode of a vacuum tube other than a diode upon which the signal voltage is impressed in order to control the plate current.

Control-grid-plate transconductance. *See* Transconductance.

Conversion transconductance (g_c). A characteristic associated with the mixer function of vacuum tubes, and used in the same manner as transconductance is used. It is the ratio of the i-f current in the primary of the first i-f transformer to the r-f signal voltage producing it.

Converter. See Mixer.

Converter tube. A multielement vacuum tube used both as a mixer and as an oscillator in a superheterodyne receiver. It creates a local frequency and combines it with an incoming signal to produce an intermediate frequency.

Counting circuit. A circuit which receives uniform pulses representing units to be counted and produces a voltage in proportion to their frequency.

Coupled impedance. The effect produced in the primary winding of a transformer by the influence of the current flowing in the secondary winding.

Coupling. The association of two circuits in such a way that energy may be transferred from one to the other.

Coupling element. The means by which energy is transferred from one circuit to another; the common impedance necessary for coupling.

Critical coupling. The degree of coupling which provides the maximum transfer of energy between two resonant circuits at the resonant frequency.

Crystal (*Xtal*). (1) A natural substance, such as quartz or tourmaline, which is capable of producing a voltage stress when under pressure. or producing pressure when under an applied voltage. Under stress it has the property of responding only to a given frequency when cut to a given thickness.

(2) A nonlinear element such as gelena or silicon, in which case the piezo-electric characteristic is not exhibited.

Crystal mixer. A device which employs the nonlinear characteristic of a crystal (nonpiezo-electric type) and a point contact to mix two frequencies.

Crystal oscillator. An oscillator circuit in which a piezoelectric crystal is used to control the frequency and to reduce frequency instability to a minimum.

Current (*I*). Flow of electrons; measured in amperes.

Cut-off (c.o.). The minimum value of negative grid bias which prevents the flow of plate current in a vacuum tube.

Cut-off limiting. Limiting the maximum output voltage of a vacuum-tube circuit by driving the grid beyond cut-off.

Cycle. One complete positive and one complete negative alternation of a current or voltage.

Damped waves. Waves which decrease exponentially in amplitude.

Decoupling network. A network of capacitors and chokes, or resistors, placed in leads which are common to two or more circuits to prevent unwanted interstage coupling.

Deflection sensitivity (*CRT*). The quotient of the displacement of the electron beam at the place of impact by the change in the deflecting field. It is usually expressed in millimeters per volt applied between the deflection electrodes, or in millimeters per gauss of the deflecting magnetic field.

Degeneration. The process whereby a part of the output signal of an amplifying device is returned to its input circuit in such a manner that it tends to cancel the input.

De-ionization potential. The potential at which ionization of the gas within a gas-filled tube ceases and conduction stops.

Demodulation. *See* Detection.

Detection. The process of separating the modulation component from the received signal.

Dielectric. An insulator; a term applied to the insulating material between the plates of a capacitor.

Dielectric constant. The ratio of the capacitance of a capacitor with a dielectric between the electrodes to the capacitance with air between the electrodes.

Differentiating circuit. A circuit which produces an output voltage substantially in proportion to the rate of change of the input voltage.

Diode. A two-electrode vacuum tube containing a cathode and a plate.

Diode detector. A detector circuit employing a diode tube.

Dipole antenna. Two metallic elements, each approximately one quarter wavelength long, which radiate r-f energy fed to them by the transmission line.

Directly heated cathode. A filament cathode which carries its own heating current for electron emission, as distinguished from an indirectly heated cathode.

Director (antenna). A parasitic antenna placed in front of a radiating element so that r-f radiation is aided in the forward direction.

Distortion. The production of an output waveform which is not a true reproduction of the input waveform. Distortion may consist of irregularities in amplitude, frequency, or phase.

Distributed capacitance. The capacitance that exists between the turns in a coil or choke, or between adjacent conductors or circuits, as distinguished from the capacitance which is concentrated in a capacitor.

Distributed inductance. The inductance that exists along the entire length of a conductor, as distinguished from the self-inductance which is concentrated in a coil.

Doorknob tube. A doorknob-shaped vacuum tube designed for ultra-high-frequency circuits. This tube has short electron transit time and low interelectrode capacitance, because of the close spacing and small size of electrodes.

Dropping resistor. A resistor used to decrease a given voltage to a lower value.

Dry electrolytic capacitor. An electrolytic capacitor using a paste instead of a liquid electrolyte. *See* Electrolytic capacitor.

Dynamic characteristics. The relation between the instantaneous plate voltage and plate current of a vacuum tube as the voltage applied to the grid is moved; thus, the characteristics of a vacuum tube during operation.

Dynatron. A negative resistance device; particularly, a tetrode operating on that portion of its i_p vs. e_p characteristic where secondary emission exists to such an extent that an increase in plate voltage actually causes a decrease in plate current, and, therefore, makes the circuit behave like a negative resistance.

Eccles-Jordan circuit (trigger circuit). A direct coupled multivibrator circuit possessing two conditions of stable equilibrium. Also known as a flip-flop circuit.

Effective value. The equivalent heating value of an alternating current or voltage, as compared to a direct current or voltage. It is 0.707 times the peak value of a sine wave. It is also called the rms value.

Efficiency. The ratio of output to input power, generally expressed as a percentage.

Electric field. A space in which an electric charge will experience a force exerted upon it.

Electrode. A terminal at which electricity passes from one medium into another.

Electrolyte. A water solution of a substance which is capable of conducting electricity. An electrolyte may be in the form of either a liquid or a paste.

Electrolytic capacitor. A capacitor employing a metallic plate and an electrolyte as the second plate separated by a dielectric which is produced by electrochemical action.

Electromagnetic field. A space field in which electric and magnetic vectors at right angles to each other travel in a direction at right angles to both.

Electron. The negatively charged particles of matter. The smallest particle of matter.

Electron emission. The liberation of electrons from a body into space under the influence of heat, light, impact, chemical disintegration, or potential difference.

Electronic switch. A circuit which causes a start-and-stop action or a switching action by electronic means.

Electronic voltmeter. *See* Vacuum tube voltmeter.

Electrostatic field. The field of influence between two charged bodies.

Equivalent circuit. A diagrammatic arrangement of coils, resistors, and capacitors, representing the effects of a more complicated circuit in order to permit easier analysis.

Farad (*f*). The unit of capacitance.

Feedback. A transfer of energy from the output circuit of a device back to its input.

Field. The space containing electric or magnetic lines of force.

Field intensity. Electrical strength of a field.

Filament. *See* Directly heated cathode.

Filter. A combination of circuit elements designed to pass a definite range of frequencies, attenuating all others.

Firing potential. The controlled potential at which conduction through a gas-filled tube begins.

First detector. *See* Mixer.

Fixed bias. A bias voltage of constant value, such as one obtained from a battery, power supply, or generator.

Fixed capacitor. A capacitor which has no provision for varying its capacitance.

Fixed resistor. A resistor which has no provision for varying its resistance.

Fluorescence. The property of emitting light as the immediate result of electronic bombardment.

Fly-back. The portion of the time base during which the spot is returning to the starting point. This is usually not seen on the screen of the cathode-ray tube, because of gating action or the rapidity with which it occurs.

Free electrons. Electrons which are loosely held and consequently tend to move at random among the atoms of the material.

Free oscillations. Oscillatory currents which continue to flow in a tuned

circuit after the impressed voltage has been removed. Their frequency is the resonant frequency of the tuned circuit.

Frequency (f). The number of complete cycles per second existing in any form of wave motion; such as the number of cycles per second of an alternating current.

Frequency distortion. Distortion which occurs as a result of failure to amplify or attenuate equally all frequencies present in a complex wave.

Frequency modulation. *See* Modulation.

Frequency stability. The ability of an oscillator to maintain its operation at a constant frequency.

Full-wave rectifier circuit. A circuit which utilizes both the positive and the negative alternations of an alternating current to produce a direct current.

Gain (A). The ratio of the output power, voltage, or current to the input power, voltage, or current, respectively.

Gas tube. A tube filled with gas at low pressure in order to obtain certain desirable characteristics.

Gating (cathode-ray tube). Applying a rectangular voltage to the grid or cathode of a cathode-ray tube to sensitize it during the sweep time only.

Grid current. Current which flows between the cathode and the grid whenever the grid becomes positive with respect to the cathode.

Grid detection. Detection by rectification in the grid circuit of a detector.

Grid leak. A high resistance connected across the grid capacitor or between the grid and the cathode to provide a d-c path from grid to cathode and to limit the accumulation of charge on the grid.

Grid limiting. Limiting the positive grid voltage (minimum output voltage) of vacuum-tube circuit by means of a large series grid resistor.

Ground. A metallic connection with the earth to establish ground potential. Also, a common return to a point of zero r-f potential, such as the chassis of a receiver or a transmitter.

Half-wave rectification. The process of rectifying an alternating current wherein only one-half of the input cycle is passed and the other half is blocked by the action of the rectifier, thus producing pulsating direct current.

Hard tube. A high vacuum electronic tube.

Harmonic. An integral multiple of a fundamental frequency. (The second harmonic is twice the frequency of the fundamental or first harmonic.)

Harmonic distortion. Amplitude distortion.

Heater. The tube element used to indirectly heat a cathode.

Henry (h). The basic unit of inductance.

Helmholtz coil. A variometer having horizontal and vertical balanced coil windings, used to vary the angle of phase difference between any two similar waveforms of the same frequency.

Heterodyne. To beat or mix two signals of different frequencies.

High-frequency resistance. The resistance presented to the flow of high-frequency current. *See* Skin effect.

Horn radiator. Any open-ended metallic device for concentrating energy from a waveguide and directing this energy into space.

Hysteresis. A lagging of the magnetic flux in a magnetic material behind the magnetizing force which is producing it.

Image frequency. An undesired signal capable of beating with the local oscillator signal of a superheterodyne receiver which produces a difference frequency within the bandwidth of the i-f channel.

Impedance (Z). The total opposition offered to the flow of an alternating current. It may consist of any combination of resistance, inductive reactance, and capacitive reactance.

Impedance coil. See Choke.

Impedance coupling. The use of a tuned circuit or an impedance coil as the common coupling element between two circuits.

Impulse. Any force acting over a comparatively short period of time, such as a momentary rise in voltage.

Indirectly heated cathode. A cathode which is brought to the temperature necessary for electron emission by a separate heater element. Compare *Directly heated cathode.*

Inductance (L). The property of a circuit which tends to oppose a change in the existing current.

Induction. The act or process of producing voltage by the relative motion of a magnetic field across a conductor.

Inductive reactance (X_1). The opposition to the flow of alternating or pulsating current caused by the inductance of a circuit. It is measured in ohms.

Inductor. A circuit element designed so that its inductance is its most important electrical property; a coil.

Infinite. Extending indefinitely; having innumerable parts, capable of endless division within itself.

In phase. Applied to the condition that exists when two waves of the same frequency pass through their maximum and minimum values of like polarity at the same instant.

Instantaneous value. The magnitude at any particular instant when a value is continually varying with respect to time.

Integrating circuit. A circuit which produces an output voltage substantially in proportion to the frequency and amplitude of the input voltage.

Intensify. To increase the brilliance of an image on the screen of a cathode-ray tube.

Intensity modulation. The control of the brilliance of the trace on the screen of a cathode-ray tube in conformity with the signal.

Interelectrode capacitance. The capacitance existing between the electrodes in a vacuum tube.

Intermediate frequency (i-f). The fixed frequency to which r-f carrier waves are converted in a superheterodyne receiver.

Inverse peak voltage. The highest instantaneous negative potential which the plate can acquire with respect to the cathode without danger of injuring the tube.

Ion. An elementary particle of matter or a small group of such particles having a net positive or negative charge.

Ionization. Process by which ions are produced in solids, liquids, or gases.

Ionization potential. The lowest potential at which ionization takes place within a gas-filled tube.

Ionosphere. A region composed of highly ionized layers of atmosphere from 70 to 250 miles above the surface of the earth.

766812°—47——29

Kilo (k). A prefix meaning 1,000.

Kilocycle (kc). One thousand cycles; conversationally used to indicate 1,000 cycles per second.

Klystron. A tube in which oscillations are generated by the bunching of electrons (that is, velocity modulation). This tube utilizes the transit time between two given electrodes to deliver pulsating energy to a cavity resonator in order to sustain oscillations within the cavity.

Lag. The amount one wave is behind another in time; expressed in electrical degrees.

Lead The opposite of *lag.* Also, a wire or connection.

Leakage. The electrical loss due to poor insulation.

Lecher line. A section of open-wire transmission line used for measurements of standing waves.

Limiting. Removal by electronic means of one or both extremities of a waveform at a predetermined level.

Linear. Having an output which varies in direct proportion to the input.

Line-balance converter. A device used at the end of a coaxial line to isolate the outer conductor from ground.

Load. The impedance to which energy is being supplied.

Local oscillator. The oscillator used in a superheterodyne receiver the output of which is mixed with the desired r-f carrier to form the intermediate frequency.

Loose coupling. Less than critical coupling; coupling providing little transfer of energy.

Magnetic circuit. The complete path of magnetic lines of force.

Magnetic field (H). The space in which a magnetic force exists.

Magnetron. A vacuum-tube oscillator containing two electrodes, in which the flow of electrons from cathode to anode is controlled by an externally applied magnetic field.

Matched impedance. The condition which exists when two coupled circuits are so adjusted that their impedances are equal.

Meg (mega) (m). A prefix meaning one million.

Megacycle (M_c). One million cycles. Used conversationally to mean 1,000,000 cycles per second.

Metallic insulator. A shorted quarter-wave section of a transmission line which acts as an electrical insulator at a frequency corresponding to its quarter-wave length.

Mho. The unit of conductance.

Micro (μ). A prefix meaning one-millionth.

Microsecond (μs). One-millionth of a second.

Milli (m). A prefix meaning one-thousandth.

Milliampera (ma). One-thousandth of an ampere.

Mixer. A vacuum tube or crystal and suitable circuit used to combine the incoming and local-oscillator frequencies to produce an intermediate frequency. *See* Beat frequency.

Modulation. The process of varying the amplitude (amplitude modulation), the frequency (frequency modulation), or the phase (phase modulation) of a carrier wave in accordance with other signals in order to convey intelligence. The modulating signal may be an audio-frequency signal, video signal (as in television), or electrical pulses or tones to operate relays, etc.

Modulator. The circuit which provides the signal that varies the ampli-

tude, frequency, or phase of the oscillations generated in the transmitter tube.

Multielectrode tube. A vacuum tube containing more than three electrodes associated with a single electron stream.

Multiunit tube. A vacuum tube containing within one envelope two or more groups of electrodes, each associated with separate electron streams.

Multivibrator. A type of relaxation oscillator for the generation of nonsinusoidal waves in which the output of each of its two tubes is coupled to the input of the other to sustain oscillations.

Mutual conductance (g_m). *See* Transconductance.

Mutual inductance. A circuit property existing when the relative position of two inductors causes the magnetic lines of force from one to link with the turns of the other.

Negative feedback. *See* Degeneration.

Neon bulb. A glass bulb containing two electrodes in neon gas at low pressure.

Network. Any electrical circuit containing two or more interconnected elements.

Neutralization. The process of nullifying the voltage fed back through the interelectrode capacitance of an amplifier tube, by providing an equal voltage of opposite phase; generally necessary only with triode tubes.

Node. A zero point; specifically, a current node is a point of zero current and a voltage node is a point of zero voltage.

Noninductive capacitor. A capacitor in which the inductive effects at high frequencies are reduced to the minimum.

Noninductive circuit. A circuit in which inductance is reduced to a minimum or negligible value.

Nonlinear. Having an output which does not vary in direct proportion to the input.

Ohm (ω). The unit of electrical resistance.

Open circuit. A circuit which does not provide a complete path for the flow of current.

Optimum coupling. *See* Critical coupling.

Oscillator. A circuit capable of converting direct current into alternating current of a frequency determined by the constants of the circuit. It generally uses a vacuum tube.

Oscillatory circuit. A circuit in which oscillations can be generated or sustained.

Oscillograph. *See* Oscilloscope.

Oscilloscope. An instrument for showing, visually, graphical representations of the waveforms encountered in electrical circuits.

Overdriven amplifier. An amplifier designed to distort the input signal waveform by a combination of cut-off limiting and saturation limiting.

Overload. A load greater than the rated load of an electrical device.

Parallel feed. Application of a d-c voltage to the plate or grid of a tube in parallel with an a-c circuit so that the d-c and a-c components flow in separate paths. Also called shunt feed.

Parallel-resonant circuit. A resonant circuit in which the applied voltage is connected across a parallel circuit formed by a capacitor and an inductor.

Paraphase amplifier. An amplifier which converts a single input into a push-pull output.

Parasitic suppressor. A resistor in a vacuum-tube circuit to prevent unwanted oscillations.

Peaking circuit. A type of circuit which converts an input to a peaked output waveform.

Peak plate current. The maximum instantaneous plate current passing through a tube.

Peak value. The maximum instantaneous value of a varying current, voltage, or power. It is equal to 1.414 times the effective value of a sine wave.

Pentode. A five-electrode vacuum tube containing a cathode, control, grid, screen grid, suppressor grid, and plate.

Phase difference. The time in electrical degrees by which one wave leads or lags another.

Phase inversion. A phase difference of 180° between two similar waveshapes of the same frequency.

Phase-splitting circuit. A circuit which produces from the same input waveform two output waveforms which differ in phase from each other.

Phosphorescence. The property of emitting light for some time after excitation by electronic bombardment.

Piezoelectric effect. The effect of producing a voltage by placing a stress, either by compression, by expansion, or by twisting, on a crystal, and, conversely, the effect of producing a stress in a crystal by applying a voltage to it.

Plate (P). The principal electrode in a tube to which the electron stream is attracted. *See* Anode.

Plate circuit. The complete electrical circuit connecting the cathode and plate of a vacuum tube.

Plate current (i_p). The current flowing in the plate circuit of a vacuum tube.

Plate detection. The operation of a vacuum-tube detector at or near cutoff so that the input signal is rectified in the plate circuit.

Plate dissipation. The power in watts consumed at the plate in the form of heat.

Plate efficiency. The ratio of the a-c power output from a tube to the average d-c power supplied to the plate circuit.

Plate impedance. *See* Plate resistance.

Plate-load impedance (R_L or Z_L). The impedance in the plate circuit across which the output signal voltage is developed by the alternating component of the plate current.

Plate modulation. Amplitude modulation of a class-C r-f amplifier by varying the plate voltage in accordance with the signal.

Plate resistance (r_p). The internal resistance to the flow of alternating current between the cathode and plate of tube. It is equal to a small change in plate voltage divided by the corresponding change in plate current, and is expressed in ohms. It is also called a-c resistance, internal impedance, plate impedance, and dynamic plate impedance. The static plate resistance, or resistance to the flow of *direct current* is a different value. It is denoted by R_p.

Positive feedback. *See* Regeneration.

Potentiometer. A variable voltage divider; a resistor which has a variable contact arm so that any portion of the potential applied between its ends may be selected.

Power. The rate of doing work or the rate of expending energy. The unit of electrical power is the watt.

Power amplification. The process of amlifying a signal to produce a gain in power, as distinguished from voltage amplification. The gain in the ratio of the alternating power output to the alternating power input of an amplifier.

Power factor. The ratio of the actual power of an alternating or pulsating current, as measured by a wattmeter, to the apparent power, as indicated by ammeter and voltmeter readings. The power factor if an inductor, capacitor, or insulator is an expression of the losses.

Power tube. A vacuum tube designed to handle a greater amount of power than the ordinary voltage-amplifying tube.

Primary circuit. The first, in electrical order, of two or more coupled circuits, in which a change in current induces a voltage in the other or secondary circuits; such as the primary winding of a transformer.

Propagation. *See* Wave propagation.

Pulsating current. A unidirectional current which increases and decreases in magnitude.

Push-pull circuit. A push-pull circuit usually refers to an amplifier circuit using two vacuum tubes in such a fashion that when one vacuum tube is operating on a positive alternation, the other vacuum tube operates on a negative alternation.

Q. The figure of merit of efficiency of a circuit or coil. Numerically it is equal to the inductive reactance divided by the resistance of the circuit or coil.

Radiate. To send out energy, such as r-f waves, into space.

Radiation resistance. A fictitious resistance which may be considered to dissipate the energy radiated from the antenna.

Radio frequency (r-f). Any frequency of electrical energy capable of propagation into space. Radio frequencies normally are much higher than sound-wave frequencies.

Radio-frequency amplification. The amplification of a radio wave by a receiver before detection, or by a transmitter before radiation.

Radio-frequency choke (RFC). An air-core or powdered iron core coil used to impede the flow of r-f currents.

Radio-frequency component. *See* Carrier.

Ratio. The value obtained by dividing one number by another, indicating their relative proportions.

Reactance (X). The opposition offered to the flow of an alternating current by the inductance, capacitance, or both, in any circuit.

Reciprocal. The value obtained by dividing the number 1 by any quantity.

Rectifier. A device used to change alternating current to unidirectional current.

Reflected impedance. *See* Coupled impedance.

Reflection. The turning back of a radio wave caused by reradiation from any conducting surface which is large in comparison to the wavelength of the radio wave.

Reflector. A metallic object placed behind a radiating antenna to prevent r-f radiation in an undesired direction and to reinforce radiation in a desired direction.

Regeneration. The process of returning a part of the output signal of an amplifier to its input circuit in such a manner that it reinforces the grid excitation and thereby increases the total amplification.

Regulation (voltage). The ratio of the change in voltage due to a load to the open-circuit voltage, expressed in per cent.

Relaxation oscillator. A circuit for the generation of nonsinusoidal waves by gradually storing and quickly releasing energy either in the electric field of a capacitor or in the magnetic field of an inductor.

Reluctance. The opposition to magnetic flux.

Resistance (R). The opposition to the flow of current caused by the nature and physical dimensions of a conductor.

Resistor. A circuit element whose chief characteristic is resistance; used to oppose the flow of current.

Resonance. The condition existing in a circuit in which the inductive and capacitive reactances cancel.

Resonance curve. A graphical representation of the manner in which a resonant circuit responds to various frequencies at and near the resonant frequency.

Rheostat. A variable resistor.

Ripple voltage. The fluctuations in the output voltage of a rectifier, filter, or generator.

rms. Abbreviation of root mean square. *See* Effective value.

Saturation. The condition existing in any circuit when an increase in the driving signal produces no further change in the resultant effect.

Saturation limiting. Limiting the minimum output voltage of a vacuum-tube circuit by operating the tube in the region of plate-current saturation (not to be confused with emission saturation).

Saturation point. The point beyond which an increase in either grid voltage, plate voltage, or both produces no increase in the existing plate current.

Screen dissipation. The power dissipated in the form of heat on the screen grid as the result of bombardment by the electron stream.

Screen grid (S_c). An electrode placed between the control grid and the plate of a vacuum tube to reduce interelectrode capacitance.

Secondary. The output coil of a transformer. *See* Primary circuit.

Secondary emission. The emission of electrons knocked loose from the plate, grid, or fluorescent screen of a vacuum tube by the impact or bombardment of electrons arriving from the cathode.

Selectivity. The degree to which a receiver is capable of discriminating between signals of different carrier frequencies.

Self-bias. The bias of a tube created by the voltage drop developed across a resistor through which either its cathode current or its grid current flows.

Self-excited oscillator. An oscillator depending on its resonant circuits for frequency determination. *See* Crystal oscillator.

Self-induction. The production of a counterelectromotive force in a conductor when its own magnetic field collapses or expands with a change in current in the conductor.

Sensitivity. The degree of response of a circuit to signals of the frequency to which it is tuned.

Series feed. Application of the d-c voltage to the plate or grid of a tube through the same impedance in which the alternating current flows. Compare *Parallel feed.*

Series resonance. The condition existing in a circuit when the source of voltage is in series with an inductor and capacitor whose reactances cancel each other at the applied frequency and thus reduce the impedance to a minimum.

Series-resonant circuit. A resonant circuit in which the capacitor and the inductor are in series with the applied voltage.

Shielding. A metallic covering used to prevent magnetic or electrostatic coupling between adjacent circuits.

Short-circuit. A low-impedance or zero-impedance path between two points.

Shunt. Parallel. A parallel resistor placed in an ammeter to increase its range.

Shunt feed. *See* Parallel feed.

Sine wave. The curve traced by the projection on a uniform time scale of the end of a rotating arm, or vector. Also known as a sinusoidal wave.

Skin effect. The tendency of alternating currents to flow near the surface of a conductor, thus being restricted to a small part of the total cross-sectional area. This effect increases the resistance and becomes more marked as the frequency rises.

Soft tube. A vacuum tube the characteristics of which are adversely affected by the presence of gas in the tube; not to be confused with tubes designed to operate with gas inside them.

Solenoid. A multiturn coil of wire wound in a uniform layer or layers on a hollow cylindrical form.

Space charge. The cloud of electrons existing in the space between the cathode and plate in a vacuum tube, formed by the electrons emitted from the cathode in excess of those immediately attracted to the plate.

Space current. The total current flowing between the cathode and all the other electrodes in a tube. This includes the plate current, grid current, screen-grid current, and any other electrode current which may be present.

Stability. Freedom from undesired variation.

Standing wave. A distribution of current and voltage on a transmission line formed by two sets of waves traveling in opposite directions, and characterized by the presence of a number of points of successive maxima and minima in the distribution curves.

Static. A fixed nonvarying condition; without motion.

Static characteristics. The characteristics of a tube with no output load and with d-c potentials applied to the grid and plate.

Superheterodyne. A receiver in which the incoming signal is mixed with a locally generated signal to produce a predetermined intermediate frequency.

Suppressor grid (Su). An electrode used in a vacuum tube to minimize the harmful effects of secondary emission from the plate.

Surge. Sudden changes of current or voltage in a circuit.

Surge impedance (ζ_o). *See* Characteristic impedance.

Sweep circuit. The part of a cathode-ray oscilloscope which provides a time-reference base.

Swing. The variation in frequency or amplitude of an electrical quantity.

Swinging choke. A choke with an effective inductance which varies with the amount of current passing through it. It is used in some power-supply filter circuits.

Synchronous. Happening at the same time; having the same period and phase.

Tank circuit. *See* Parallel-resonant circuit.

Tetrode. A four-electrode vacuum tube containing a cathode, control grid, screen grid, and plate.

Thermionic emission. Electron emission caused by heating an emitter.

Thermocouple ammeter. An ammeter which operates by means of a

voltage produced by the heating effect of a current passed through the junction of two dissimilar metals. It is used for r-f measurements.

Thyratron. A hot-cathode, gas-discharge tube in which one or more electrodes are used to control electrostatically the starting of an unidirectional flow of current.

Tight coupling. Degree of coupling in which practically all of the magnetic lines of force produced by one coil link a second coil.

Trace. A visible line or lines appearing on the screen of a cathode-ray tube in operation.

Transconductance (G_m). The ratio of the change in plate current to the change in grid voltage producing this change in plate current, while all other electrode voltages remain constant.

Transformer. A device composed of two or more coils, linked by magnetic lines of force, used to transfer energy from one circuit to another.

Transient. The voltage or current which exists as the result of a change from one steady-state condition to another.

Transit time. The time which electrons take to travel between the cathode and the plate of a vacuum tube.

Transmission lines. Any conductor or system of conductors used to carry electrical energy from its source to a load.

Triggering. Starting an action in another circuit, which then functions for a time under its own control.

Triode. A three-electrode vacuum tube, containing a cathode, control grid, and plate.

Tuned circuit. A resonant circuit.

Tuning. The process of adjusting a radio circuit so that it resonates at the desired frequency.

Unbalanced line. A transmission line in which the voltages on the two conductors are not equal with respect to ground; for example, a coaxial line.

Unidirectional. In one direction only.

Vacuum-tube voltmeter (VTVM). A device which uses either the amplifier characteristic or the rectifier characteristic of a vacuum tube or both to measure either d-c or a-c voltages. Its input impedance is very high, and the current used to actuate the meter movement is not taken from the circuit being measured. It can be used to obtain accurate measurements in sensitive circuits.

Variable-u tube. A vacuum tube in which the control grid is irregularly spaced, so that the grid exercises a different amount of control on the electron stream at different points within its operating range.

Variocoupler. Two independent inductors, so arranged mechanically that their mutual inductance (coupling) can be varied.

Variometer. A variocoupler having its two coils connected in series, and so mounted that the movable coil may be rotated within the fixed coil, thus changing the total inductance of the unit.

Vector. A line used to represent both direction and magnitude.

Velocity modulation. A method of modulation in which the input signal voltage is used to change the velocity of electrons in a constant-current electron beam so that the electrons are grouped into bunches.

Video amplifier. A circuit capable of amplifying a very wide range of frequencies, including and exceeding the audio band of frequencies.

Volt (V). The unit of electrical potential.

Voltage amplification. The process of amplifying a signal to produce a

gain in voltage. The voltage gain of an amplifier is the ratio of its alternating-voltage output to its alternating-voltage input.

Voltage divider. An impedance connected across a voltage source. The load is connected across a fraction of this impedance so that the load voltage is substantially in proportion to this fraction.

Voltage doubler. A method of increasing the voltage by rectifying both halves of a cycle and causing the outputs of both halves to be additive.

Voltage regulation. A measure of the degree to which a power source maintains its output-voltage stability under varying load conditions.

Watt (w). The unit of electrical power.

Wave. Loosely, an electromagnetic impulse, periodically changing in intensity and traveling through space. More specifically, the graphical representation of the intensity of that impulse over a period of time.

Waveform. The shape of the wave obtained when instantaneous values of an a-c quantity are plotted against time in rectangular coordinates.

Wavelength (λ). The distance, usually expressed in meters, traveled by a wave during the time interval of one complete cycle. It is equal to the velocity divided by the frequency.

Wave propagation. The transmission of r-f energy through space.

Wien-bridge circuit. A circuit in which the various values of capacitance and resistance are made to balance with each other at a certain frequency.

X. The symbol for reactance.

Z. The symbol for impedance.

INDEX

DATE	ISSUED TO
12-7-61	R WHITNEY EIR
6 Apr 66	Elie GL AAA

LIBRARY CIRCULATION SLIP

GPO 980755

—U. S. GOVERNMENT PRINTING OFFICE: 1947